93423

F.A.U. RTE.	SECTION	COUNTY	TOTAL SHEETS	SHEET NO.
8075	03-00167-04-FP	SANGAMON	109	62
STA.		TO STA.		
FED. ROAD DIST. NO.	ILLINOIS	FED. AID PROJECT		

GENERAL NOTES

Build tops of headwalls parallel to grade line.

If embankment slope above headwall is flatter than 2:1, provide wings for 2:1 slope.

Reinforcing shapes shown, may be either shop or field formed.

The follwing quantities are for 1 (one) Concrete End Section and are for estimation purposes only. The end section shall be paid for at the unit price each for 'Box Culvert End Sections, Special' of the size specified.

Cubic Yards of Concrete = 22.5 Cu. Yds.
Pounds of Reinforcement Bars = 1560 Lbs.

For construction requirements, See Article 542.07 (a) of the Illinois Department of Transportation, Standard Specifications for Road and Bridge Construction.

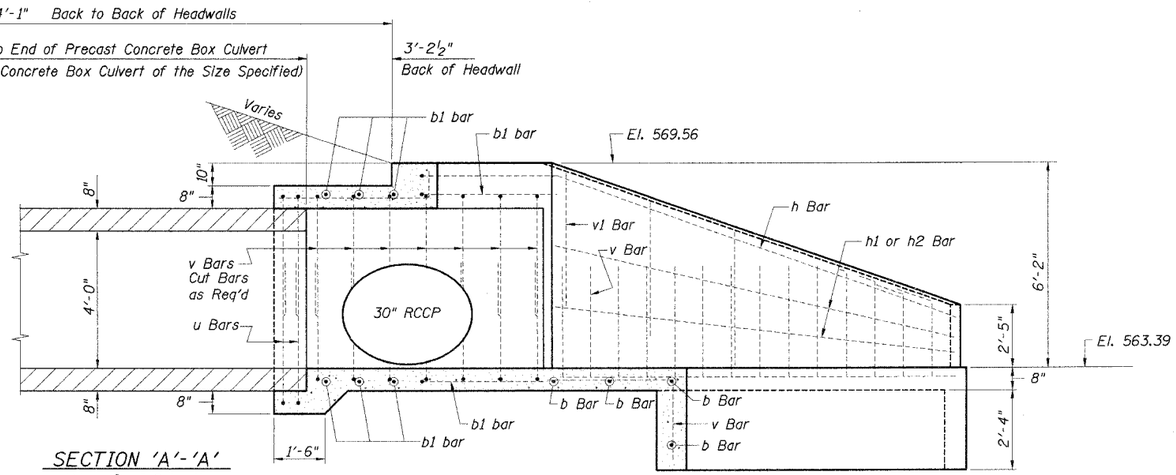

SECTION 'A'-'A'
(Along ℄ of Culvert)

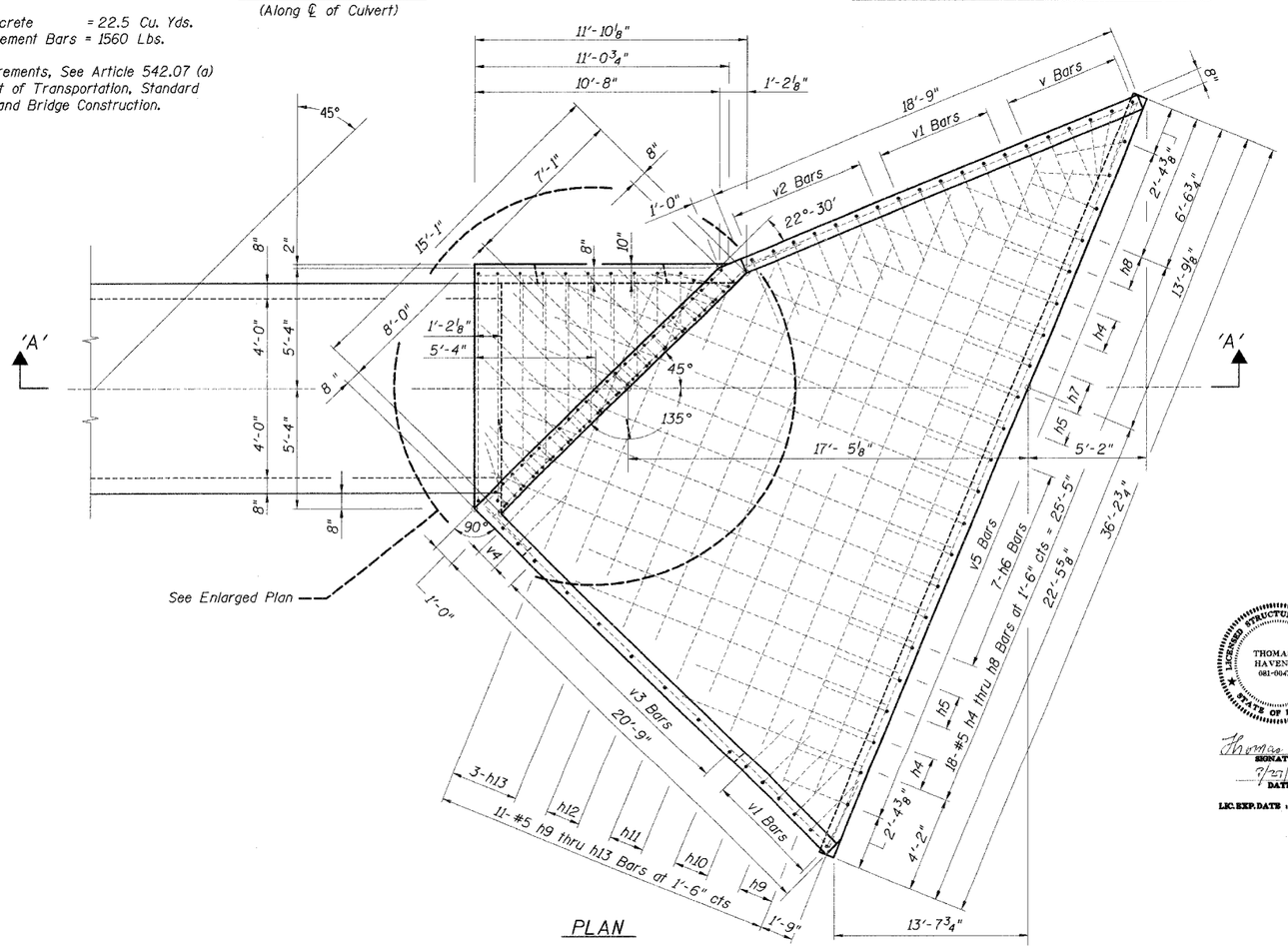

PLAN

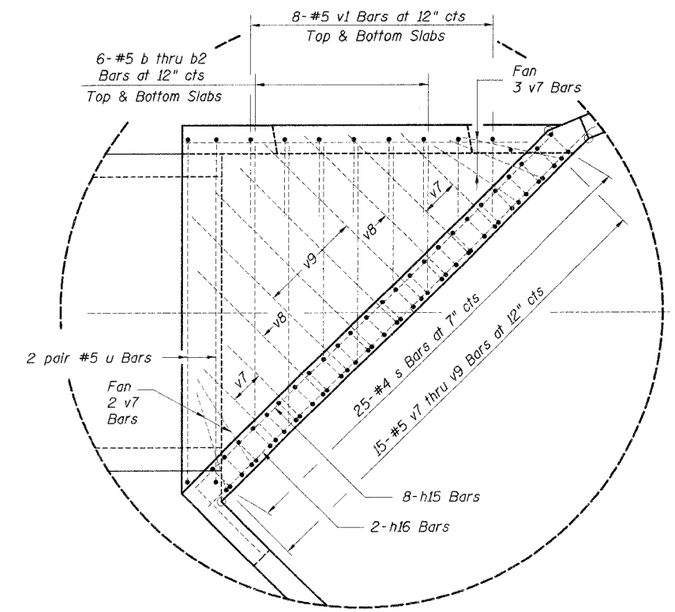

ENLARGED PLAN

LICENSED STRUCTURAL ENGINEER
THOMAS E. HAVENAR
081-004725
STATE OF ILLINOIS

SIGNATURE
7/27/06
DATE
LIC. EXP. DATE: 11/30/06

REINFORCED CONCRETE END SECTION
FOR PRECAST BOX CULVERT NO. 1
48" HIGH x 96" WIDE
STATION 468+05.77 (DOWNSTREAM)

HANSON
Hanson Professional Services Inc.

JOB NO. 03s2035b
DATE 6/21/06

LAYOUT	TEH	6/06/06
DRAWN	CLG	6/07/06
REVIEWED	VPT	6/08/06

07/27/2006
I:\03JOBS\03s2035b\structures\Culvert\Culvert Sta 468+05.5.dgn