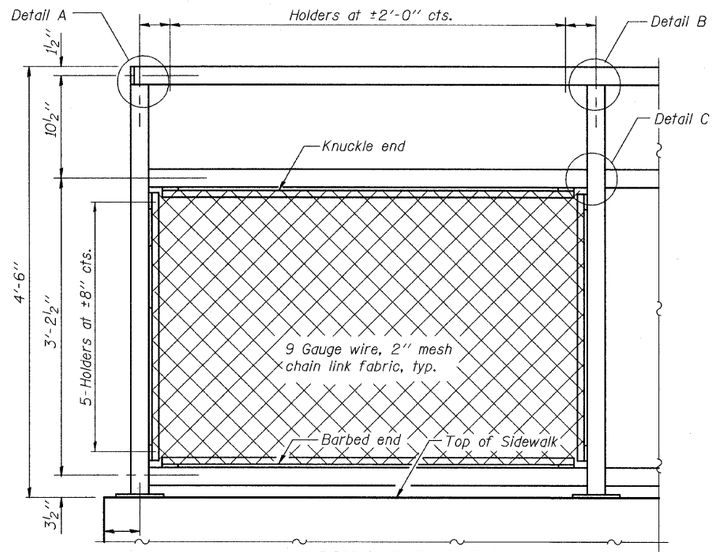

BICYCLE RAILING

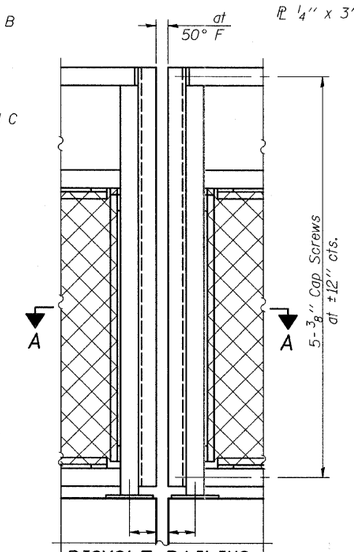

BICYCLE RAILING

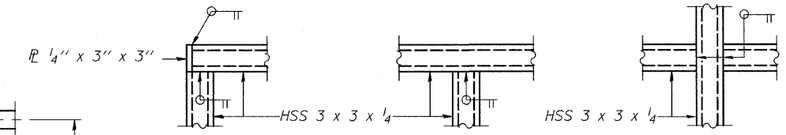

DETAIL A DETAIL B DETAIL C

All steel rail elements shall be galvanized according to Article 509.05 of the Standard Specifications.

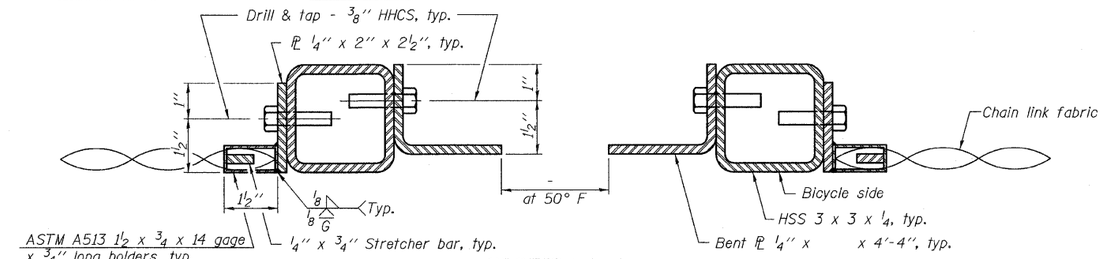

SECTION A-A

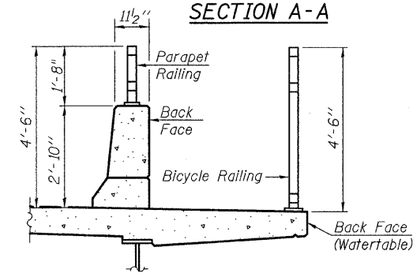

SECTION THRU DECK

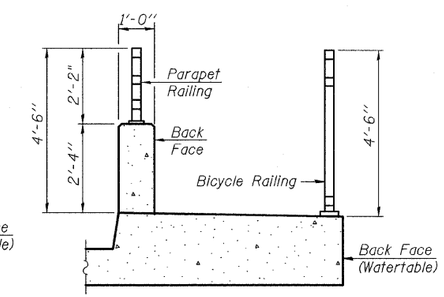

SECTION THRU SIDEWALK

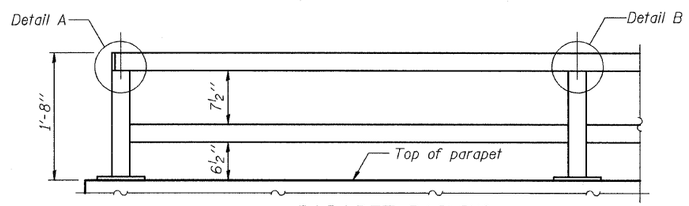

PARAPET RAILING ELEVATION
(Inside Face of Two Element Rail)

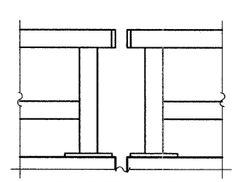

PARAPET RAILING ELEVATION AT EXPANSION JOINT
(Two Element Rail Shown - Three Element Rail Similar)

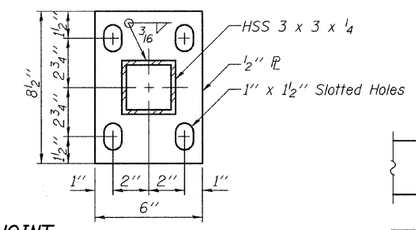

BASE PL

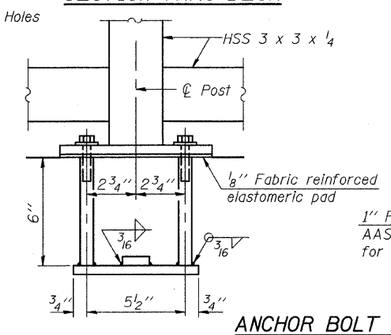

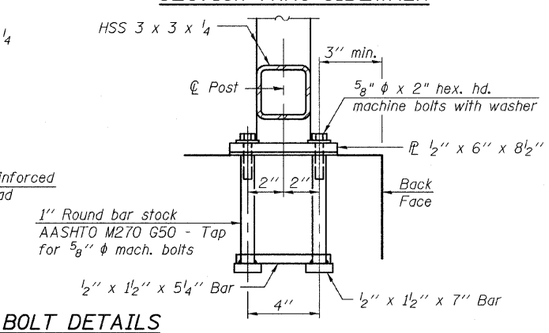

ANCHOR BOLT DETAILS

In lieu of the cast-in-place anchor device shown, the Contractor has the option of drilling and setting ⅝" ϕ anchor rods according to Article 509.06 of the Standard Specifications. Embedment shall be according to the manufacturer's specifications.

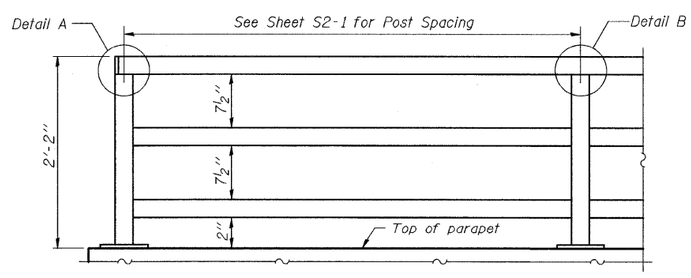

PARAPET RAILING ELEVATION
(Inside Face of Three Element Rail)

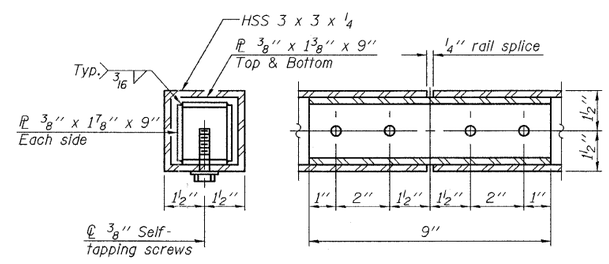

RAIL SPLICE

BILL OF MATERIAL

Item	Unit	Quantity
Parapet Railing	Foot	78

PARAPET RAILING
STRUCTURE NO. 049-W018

CHRISTIAN-ROGE & ASSOCIATES, INC.

R-29 7-1-10 (10'-0" Maximum Post Spacing)

FILE NAME = D160953-06-par_railing.dgn	USER NAME =	DESIGNED - J.C.N./B.N.S.	REVISED -
		CHECKED - B.N.S.	REVISED -
	PLOT SCALE =	DRAWN - F.M.	REVISED -
	PLOT DATE =	CHECKED - B.N.S./J.C.N.	REVISED -

STATE OF ILLINOIS
DEPARTMENT OF TRANSPORTATION

PARAPET RAILING
STRUCTURE NO. 049-W018
SHEET NO. S2-6 OF S2-7 SHEETS

F.A.P RTE.	SECTION	COUNTY	TOTAL SHEETS	SHEET NO.
330	128R-3	LAKE	518	299
		CONTRACT NO. 60953		
		ILLINOIS FED. AID PROJECT		