* In lieu of the cast-in-place anchor device shown, the Contractor has the option of drilling and setting stainless steel anchor rods of the same diameter and grade as the specified cap screws according to Article 509.06 of the Standard Specifications. Embedment shall be according to the manufacturer's specifications.

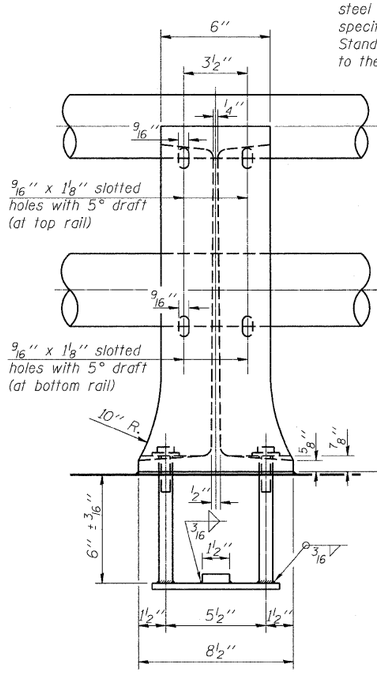

VIEW B-B

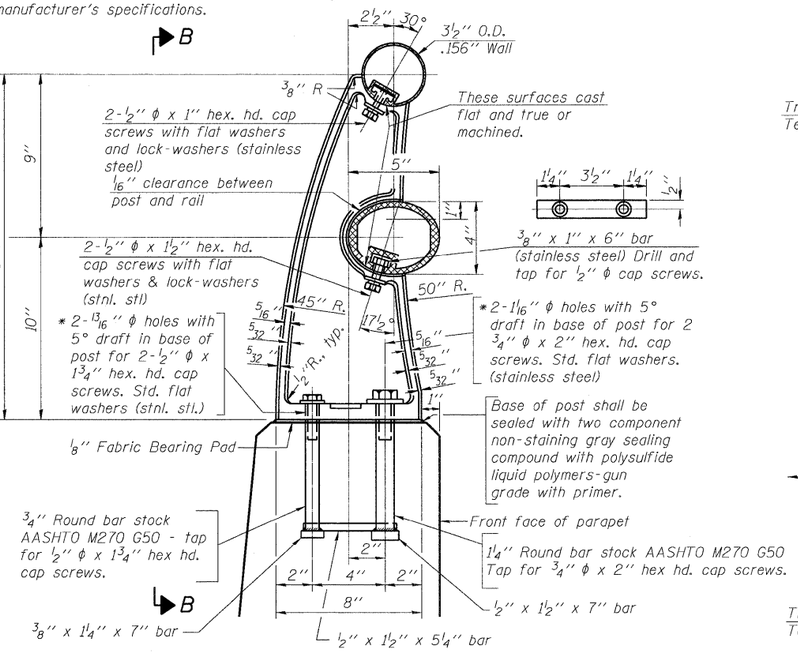

TYPICAL SECTION

RAIL POST DETAILS

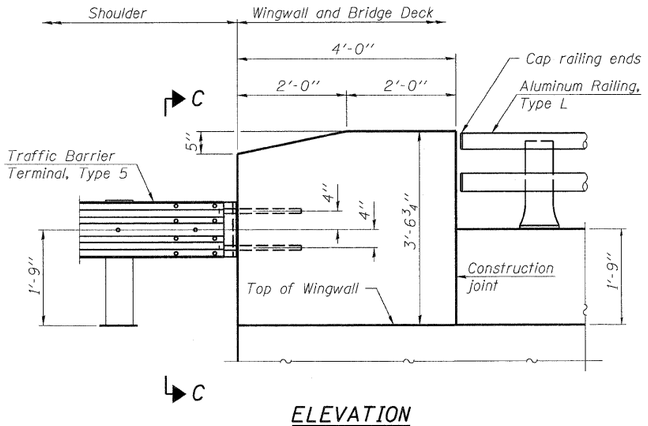

ELEVATION

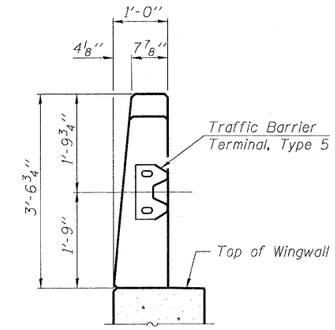

SECTION C-C

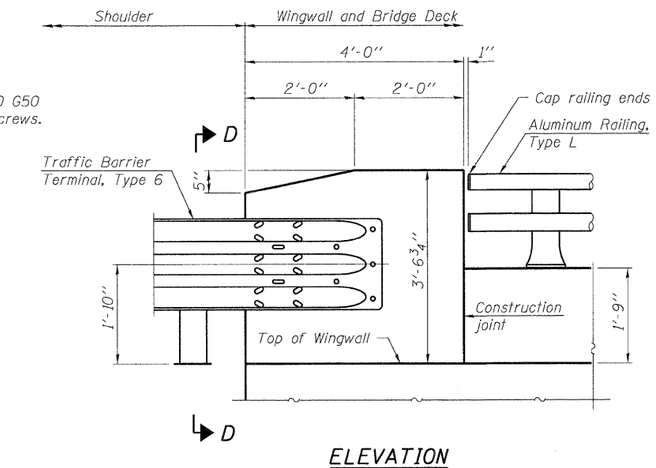

ELEVATION

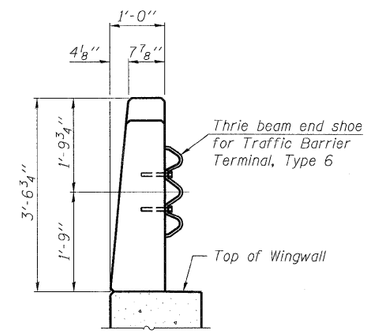

SECTION D-D

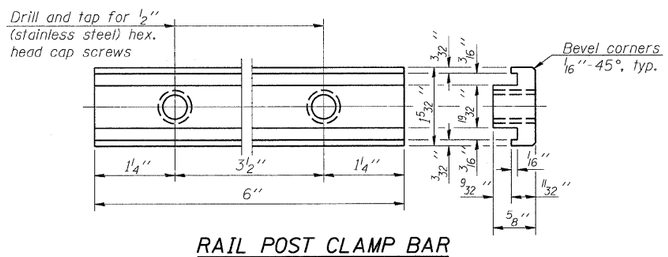

RAIL POST CLAMP BAR

For Top Rail

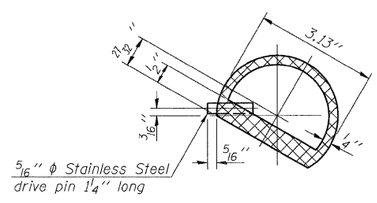

SECTION THRU SPLICE

For Top Rail

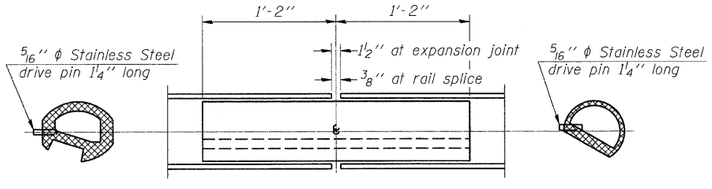

BOTTOM RAIL

RAIL SPLICE

TOP RAIL

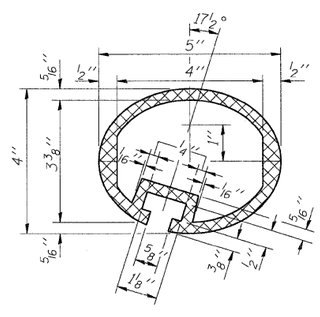

SEC. THRU ELLIPTICAL RAIL SECTION

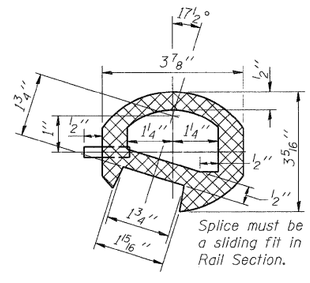

SEC. THRU SPLICE

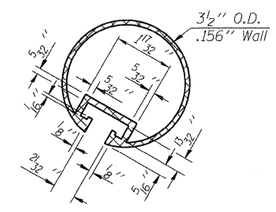

SECTION THRU TOP RAIL

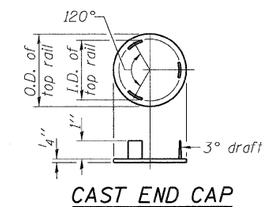

CAST END CAP

For top rail

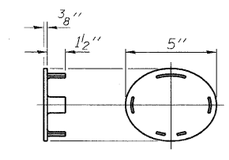

CAST END CAP

For bottom rail
DRIVE FIT TYPE

Notes:
All Posts shall be normal to parapet.
All joints in rail shall be spliced per detail.
All exposed rail ends shall be capped per detail.
Provide 1-⅛" and 2-1/16" Aluminum Shims for 25% of the Posts. Rail elements shall be parallel to Grade-high spots will be ground and low spots shimmed.
See Superstructure Details for Rail Post Spacing.

BILL OF MATERIAL

Item	Unit	Quantity
Aluminum Railing, Type L	Foot	501

MACTEC

FILE NAME = 0160199-62099-16-RAILING.dgn	USER NAME =	DESIGNED - JPMILLA	REVISED -
		CHECKED - RALEE	REVISED -
	PLOT SCALE =	DRAWN - RMKANE	REVISED -
	PLOT DATE = 07/01/2011	CHECKED - RALEE	REVISED -

STATE OF ILLINOIS
DEPARTMENT OF TRANSPORTATION

IL. RT 1 – HALSTED ST. OVER I-80/294
ALUMINUM RAILING, TYPE L

SHEET NO. 16 OF 33 SHEETS

F.A.P. RTE.	SECTION	COUNTY	TOTAL SHEETS	SHEET NO.
876	2001-001BR	COOK	62	35
STRUCTURE NO. 016-0199		CONTRACT NO. 62099		
	ILLINOIS FED. AID PROJECT			