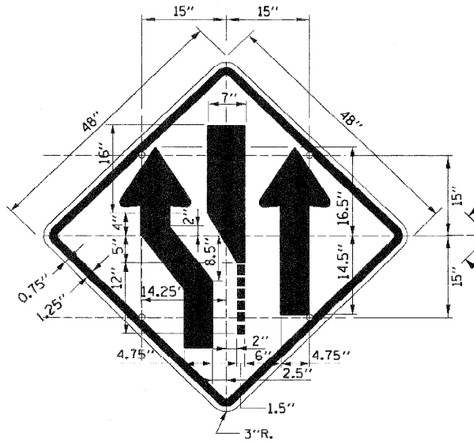

SIGN TS-1 (O)

COLOR: BACKGROUND - FLUORESCENT ORANGE (O)
BORDER AND SYMBOL - BLACK
SIZE: 48"x48"
MOUNTING HOLES: 7/16" DIA., 4 HOLES SPACED AS SHOWN
NOTE: SIGN TS-1L IS SHOWN; REVERSE SYMBOL FOR SIGN TS-1R

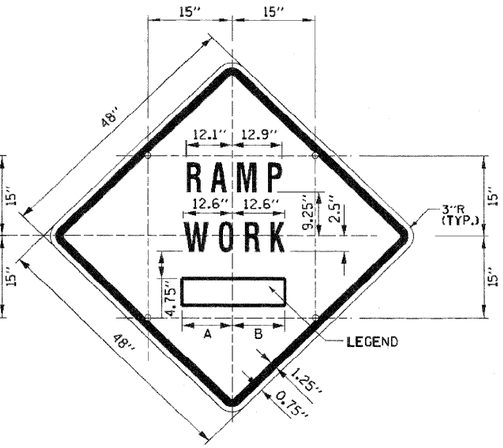

SIGN TS-2 (O)

COLOR: BACKGROUND - FLUORESCENT ORANGE (O)
BORDER AND SYMBOL - BLACK
SIZE: 48"x48"
LETTERING: 7" FEDERAL SERIES D
MOUNTING HOLES: 7/16" DIA., 4 HOLES SPACED AS SHOWN

SIGN NO.	LEGEND	A	B
TS-2A	AHEAD	15.50"	15.50"
TS-2B	500 FT	14.25"	15.13"
TS-2C	1000 FT	14.88" L2	15.75" L2
TS-2D	1500 FT	14.88" L2	15.75" L2
TS-2E	1/2 MILE	15.75" L3	15.75" L3
TS-2F	1 MILE	13.06"	13.06"

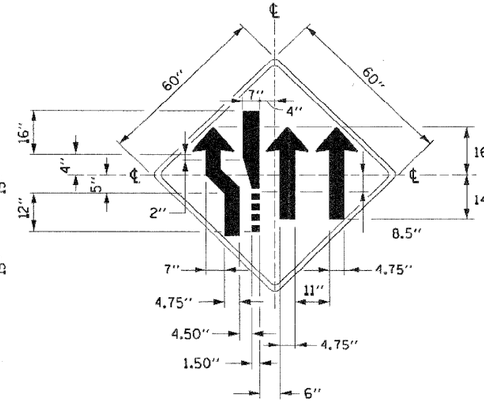

SIGN TS-1CL (O)

COLOR: BACKGROUND - FLUORESCENT ORANGE (O)
BORDER AND SYMBOL-BLACK
(NON-REFLECTORIZED)

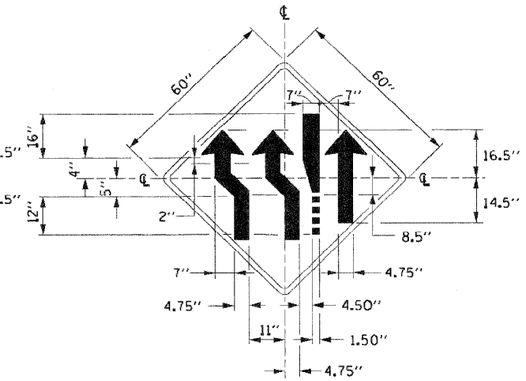

SIGN TS-1CR (O)

COLOR: BACKGROUND - FLUORESCENT ORANGE (O)
BORDER AND SYMBOL-BLACK
(NON-REFLECTORIZED)

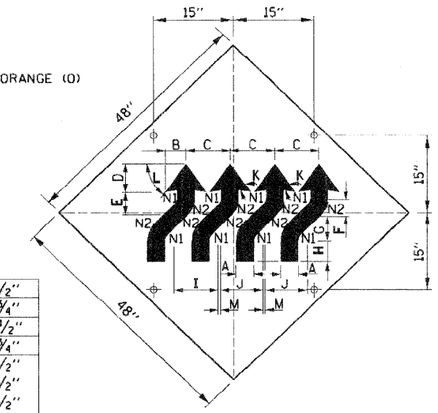

A	4 1/2"
B	5 3/4"
C	12 1/2"
D	7 3/4"
E	6 1/2"
F	4 1/2"
G	6 1/2"
H	6"
I	12 3/4"
J	12"
K	45°
L	55°
M	0 3/4"
N1	2"
N2	6 1/2"

SIGN WI-4dR (O)

COLOR: BACKGROUND, FLUORESCENT ORANGE (O)
TYPE A REFLECTIVE
SHEETING PER STANDARD
SPECIFICATIONS (✱A)
BORDER AND LETTERS-BLACK
SIZE: 48"x48"
MOUNTING HOLES: 7/16" DIA., 4 HOLES SPACED AS SHOWN.

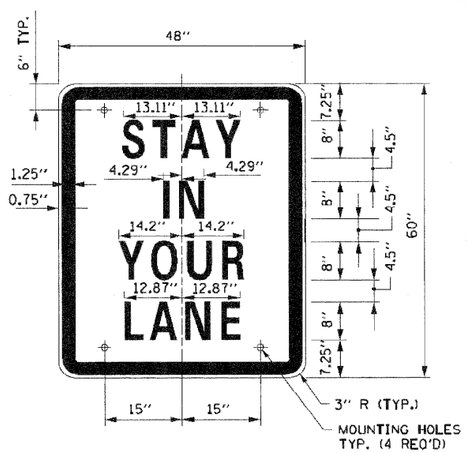

SIGN TS-3

COLOR: BACKGROUND - WHITE (REFLECTORIZED)(✱A)
BORDER AND LETTERS - BLACK
SIZE: 48"x60"
LETTERING: LEGEND - 8" FEDERAL SERIES D
MOUNTING HOLES: 7/16" DIA., 4 HOLES, SPACED AS SHOWN

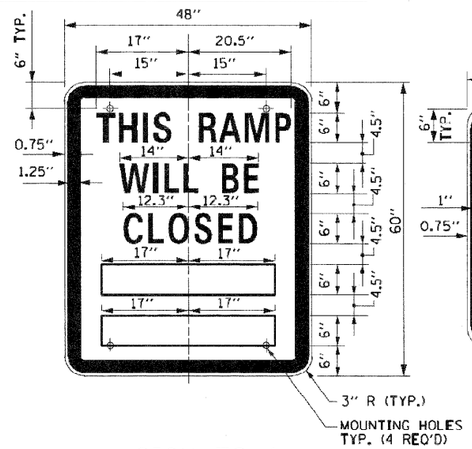

SIGN TS-4

COLOR: BACKGROUND - WHITE (REFLECTORIZED)(✱A)
BORDER AND LETTERS - BLACK
SIZE: 48"x60"
LETTERING: LEGEND - 6" FEDERAL SERIES C
MOUNTING HOLES: 7/16" DIA., 4 HOLES, SPACED AS SHOWN

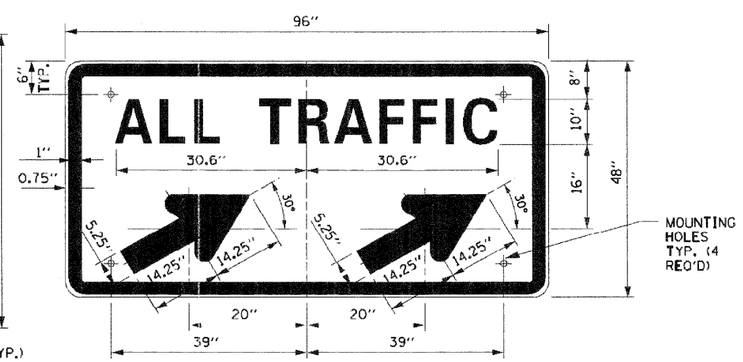

SIGN TS-5a & TS-5b

COLOR: BACKGROUND - WHITE (REFLECTORIZED)(✱A)
BORDER AND LETTERS - BLACK
ARROW - BLACK
SIZE: 96"x48"
LETTERING: 10" FEDERAL SERIES D
MOUNTING HOLES: 7/16" DIA., 4 HOLES, SPACED AS SHOWN
NOTE: SIGN TS-5a IS SHOWN, SUBSTITUTE LEGEND "⬋" FOR "⬋⬋" FOR SIGN TS-5b

RAMP CLOSURE ADVANCE INFORMATION SIGN

THE VARIABLE MESSAGE WITH DATES FOR THE BOTTOM TWO LINES SHALL BE DETERMINED BY THE ENGINEER AND GIVEN TO THE CONTRACTOR BEFORE THE REQUIRED FIELD ERECTION DATE.

NOTES:

1. ALL LETTERING IS DESIGNATED BY SIZE AND SERIES IN ACCORDANCE WITH THE LATEST EDITION OF "STANDARD ALPHABETS FOR HIGHWAY SIGNS AND PAVEMENT MARKINGS" AS PUBLISHED BY THE U.S. DEPARTMENT OF TRANSPORTATION. LETTERING SPACING SHALL BE IN ACCORDANCE WITH THIS GUIDE EXCEPT WHERE NOTED.
2. SYMBOLS AND ARROWS SHALL CONFORM TO THE DETAILS SHOWN IN THE LATEST EDITION OF "STANDARD HIGHWAY SIGNS" AS PUBLISHED BY THE U.S. DEPARTMENT OF TRANSPORTATION.
3. SEE THE CONTRACT REQUIREMENTS FOR ADDITIONAL NOTES AND SPECIFICATIONS.
   (O) FLUORESCENT ORANGE REFLECTIVE SHEETING PER THE STANDARD SPECIFICATIONS.
   (✱A) - REFLECTIVE SHEETING PER THE STANDARD SPECIFICATIONS.
4. DIMENSIONS INDICATED THUS L ARE BASED ON A REDUCTION IN STANDARD LETTERING SPACING AS SHOWN BELOW:
   L1 SPACING REDUCED BY 25%
   L2 SPACING REDUCED BY 40%
   L3 SPACING REDUCED BY 50%

SHEET 1 OF 2

Illinois Tollway
Open Roads for a Faster Future

DATE	REVISIONS
5-1-2009	DELETED FLASHING ARROW BOARDS
1-1-2011	ADDED SIGN COLOR DESIGNATION

CONSTRUCTION SIGNS

STANDARD E1-02

APPROVED Paul Kovacs CHIEF ENGINEER DATE 5-1-2009

FILE NAME = 62099STD01.dgn	USER NAME = halsted	DESIGNED - PK	REVISED -	STATE OF ILLINOIS DEPARTMENT OF TRANSPORTATION	ILLINOIS RTE 1 OVER TRI-STATE I-80 / I-294 STANDARD E1-02 CONSTRUCTION SIGNS	F.A.P RTE.	SECTION	COUNTY	TOTAL SHEETS / SHEET NO.
		DRAWN - GAP	REVISED -			876	2001-001BR	COOK	62 / 58
	PLOT SCALE = 50.0000 ' / IN.	CHECKED - RPI	REVISED -					CONTRACT NO. 62099	
	PLOT DATE = 6/28/2011	DATE - 07/01/2011	REVISED -		SCALE: NONE / SHEET NO. OF SHEETS / STA. TO STA.	FED. ROAD DIST. NO. 1	ILLINOIS	FED. AID PROJECT	