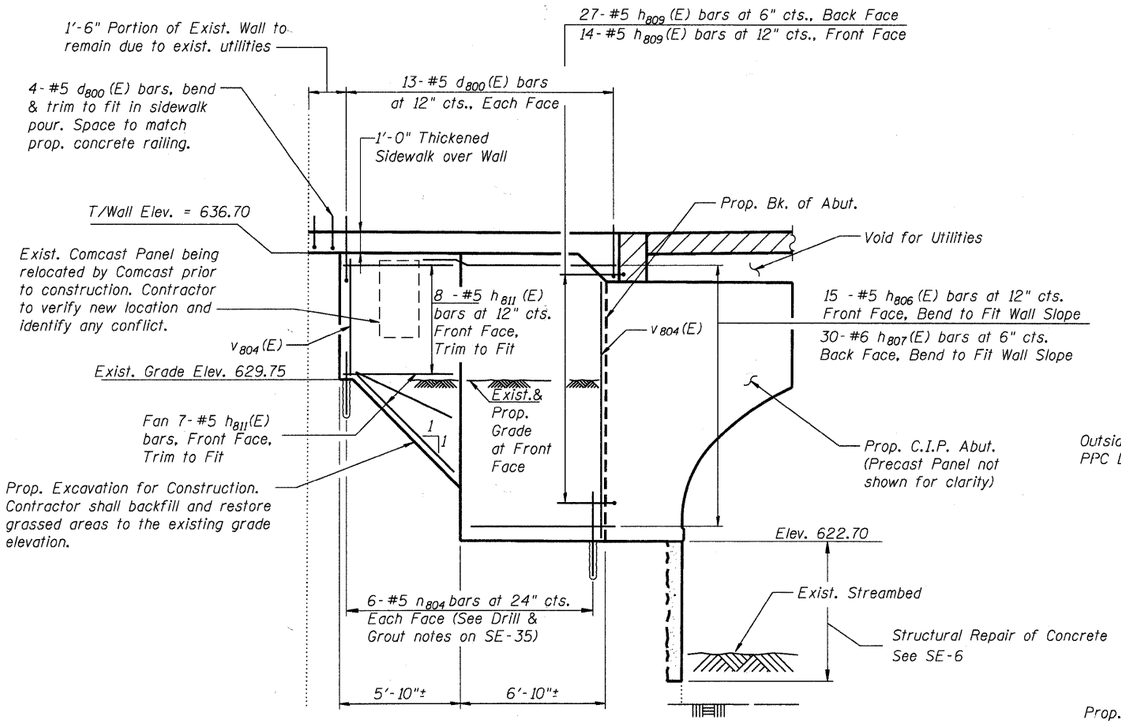

ELEVATION AT N.E. WINGWALL & EXISTING RETAINING WALL

- Prop. Precast Elements, railing and exist. retaining wall perpendicular to bridge not shown for clarity.
- Excavation for wingwall and retaining wallconstruction to be paid for as Structural Excavation.
- Backfill to existing grade Elev. to be paid for as Porous Granular Embankment (Special). Cost of restoration of grass area to be included in the unit price of Sodding (See Roadway Plans).

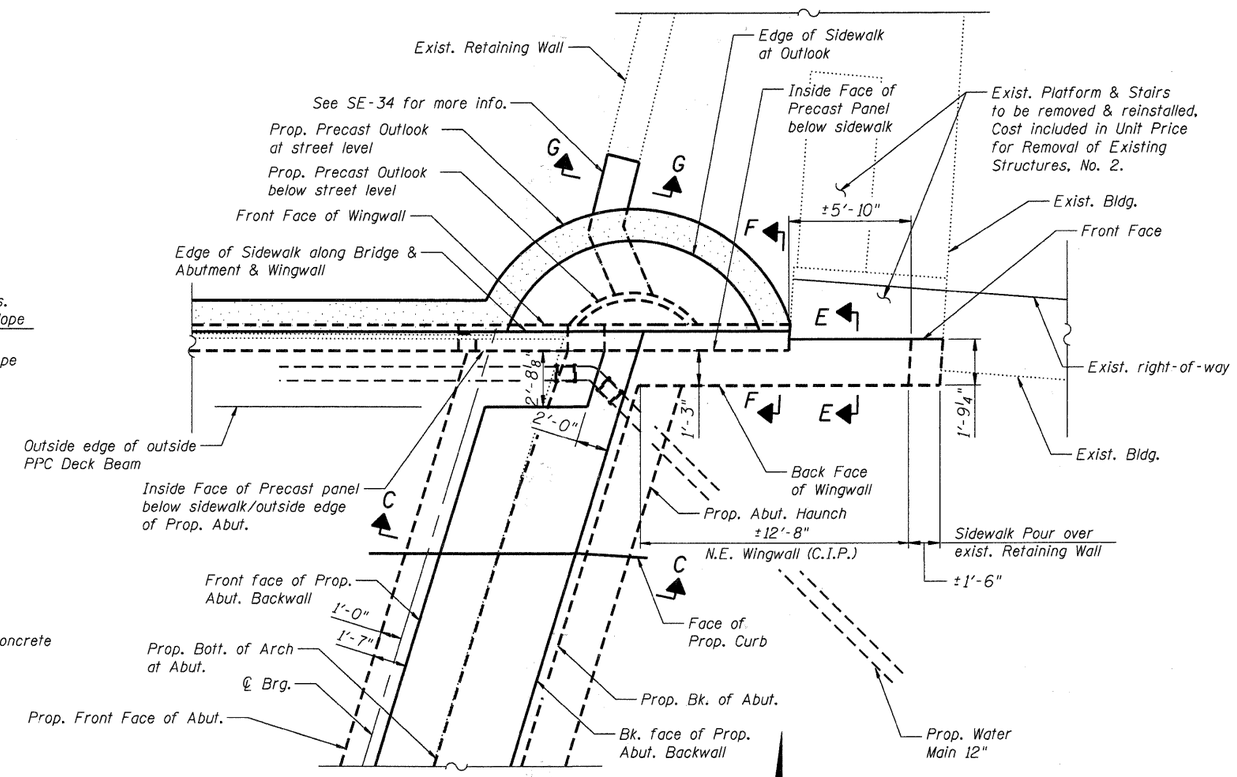

PLAN - N.E. CORNER EAST ABUTMENT

- Railing not shown for clarity

See Precast Concrete Fascia Panel-Abutment Details and Precast Concrete Outlook Details for additional information.

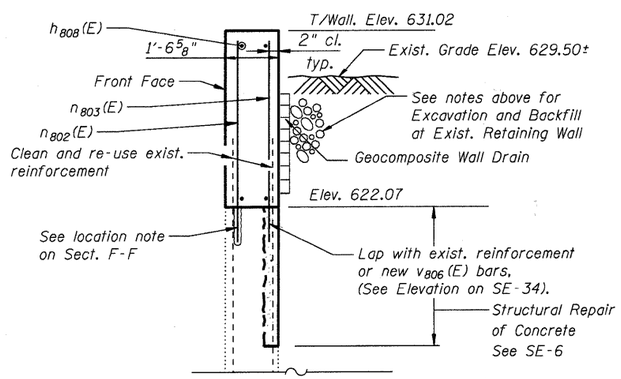

SECTION G-G

See Sheet SE-6 for Demolition Details, Sheet SE-35 for bar bends, & Sheet SE-34 for bar call-outs

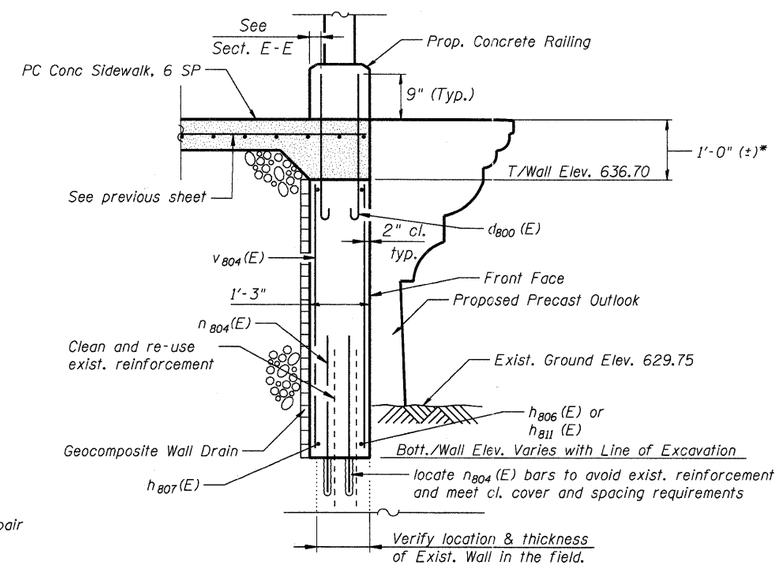

SECTION F-F

*Prop. sidewalk elevation(s) to match existing sidewalk elevations at building exterior & top of exist. stair platform

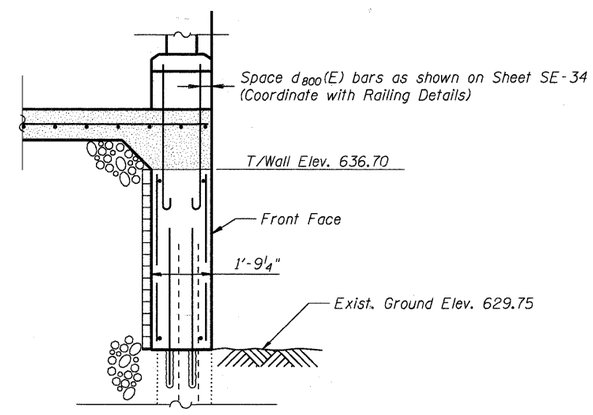

SECTION E-E

See Section F-F for more information

Notes:
1. See next sheet for Section C-C

COMPANY NAME: HRGREEN
PROJECT CONTACT: Michael G. Harding
CLIENT: City of Aurora
DATE PLOTTED: 7/26/2011 11:06:20 AM
FILE NAME: 86090412-E-Exhtlec.dgn
PLOT DRIVER: pdf.pltr
PEN TABLE: Struct 22x34.tbl

HRGreen.com Illinois Professional Design Firm # 184-001322	USER NAME = whood	DESIGNED - JMW	REVISED -	CITY OF AURORA DOWNER PLACE OVER THE EAST BRANCH OF THE FOX RIVER	NORTHEAST CORNER DETAILS STRUCTURE NO. 045-6005	F.A. RTE.	SECTION	COUNTY	TOTAL SHEETS	SHEET NO.
		CHECKED - RGD	REVISED -				07-00264-00-BR	KANE	164	136
	PLOT SCALE = N.T.S.	DRAWN - WJH	REVISED -					CONTRACT NO. 63620		
	PLOT DATE = 7/26/2011	CHECKED -	REVISED -		SHEET NO. SE-36 OF SE-45 SHEETS		ILLINOIS	FED. AID PROJECT		