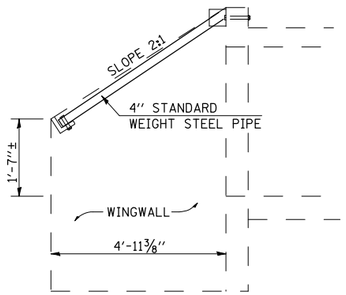

SIDE VIEW OF WINGWALL
SECTION A-A

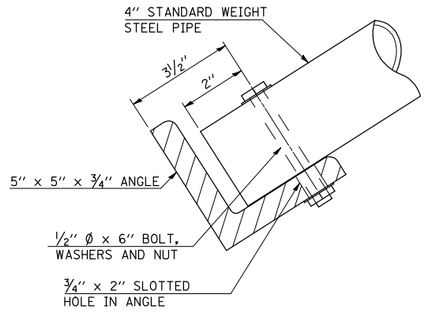

END VIEW OF WINGWALL
SECTION B-B

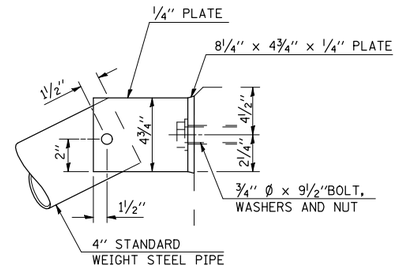

ELEVATION AT WINGWALL

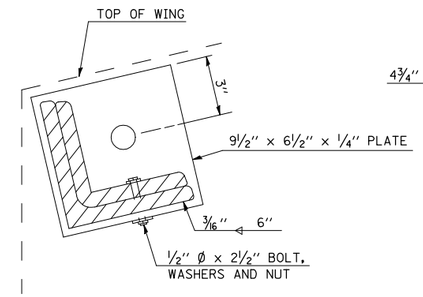

ELEVATION AT END OF WINGWALL

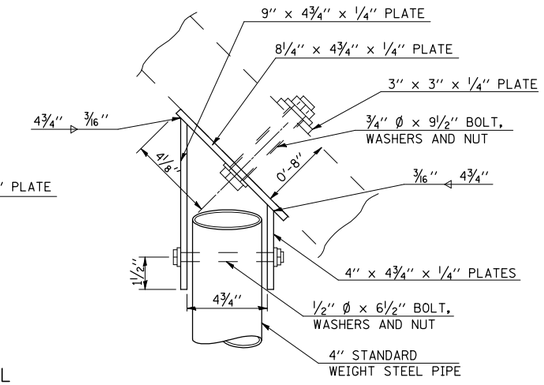

PLAN AT WINGWALL

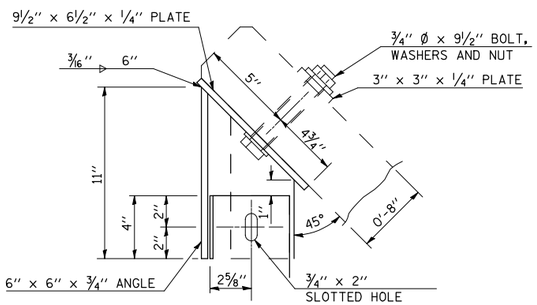

PLAN AT END OF WINGWALL

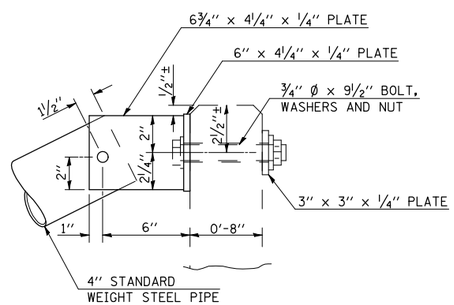

ELEVATION AT HEADWALL

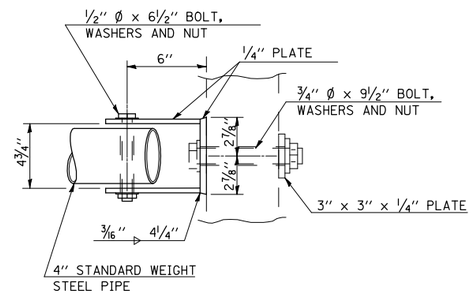

PLAN AT HEADWALL

GENERAL NOTES

1. BOLTS AND NUTS SHALL CONFORM TO A.S.T.M. A 307. ALL BOLTS SHALL HAVE WASHERS AT EACH END. HOLES SHALL BE 1/16" OVERSIZED UNLESS OTHERWISE NOTED EXCEPT IN CONCRETE WHICH SHALL BE 1/8" OVERSIZED.
2. ANGLES AND STEEL PLATES SHALL CONFORM TO A.A.S.H.T.O. M 183. STEEL PIPES SHALL CONFORM TO A.S.T.M. A 53, GRADE B OR A.S.T.M. A 501.
3. STEEL PIPES, ANGLES AND PLATES SHALL BE HOT DIPPED GALVANIZED CONFORMING TO THE REQUIREMENTS OF A.A.S.H.T.O. M 111.
4. BOLTS, NUTS AND WASHERS SHALL BE HOT DIPPED GALVANIZED CONFORMING TO THE REQUIREMENTS OF A.A.S.H.T.O. M 232.
5. THE APPROXIMATE WEIGHT OF THE STEEL IS 1175 POUND. THIS TOTAL INCLUDES PLATES, ANGLES AND PIPES. BOLTS, NUTS AND WASHERS ARE NOT INCLUDED.
6. ALL DIMENSIONS ARE TO BE VERIFIED IN THE FIELD. CUTTING OF THE STANDARD WEIGHT PIPE AND ANGLES TO THE EXACT LENGTH AND DRILLING HOLES IS TO BE DONE IN THE FIELD.
7. THIS WORK WILL BE PAID FOR AT THE CONTRACT UNIT PRICE EACH FOR "GRATING FOR CONCRETE HEADWALL" WHICH PRICE SHALL INCLUDE ALL MATERIAL, LABOR, AND EQUIPMENT TO COMPLETE THE INSTALLATION AS SHOWN.
8. REMOVAL OF EXISTING GRATING AND SUPPORT SHALL BE INCLUDED IN THE CONTRACT UNIT PRICE EACH FOR GRATING FOR CONCRETE HEADWALL.

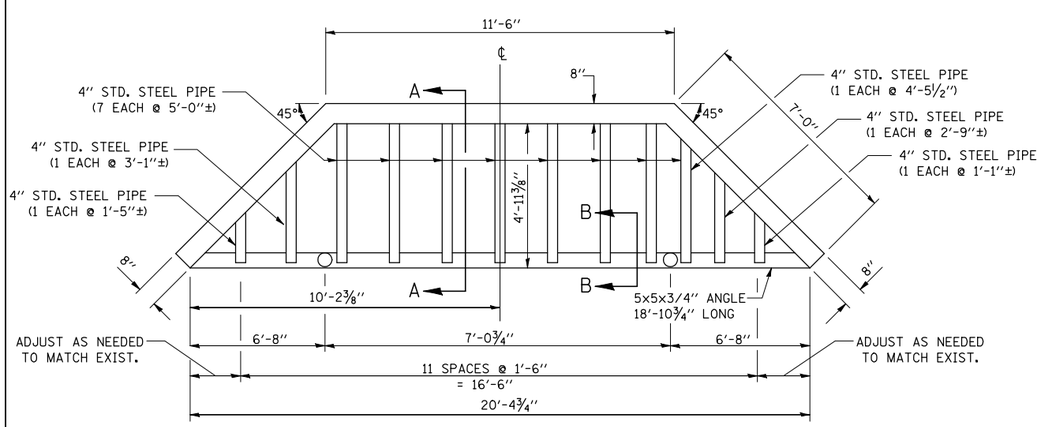

PLAN

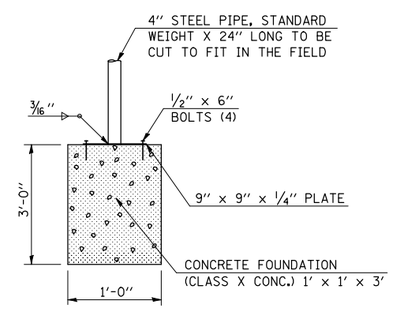

SUPPORT FOUNDATION

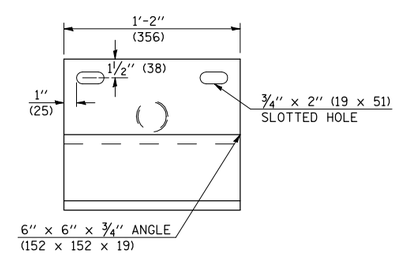

PLAN VIEW OF SUPPORT

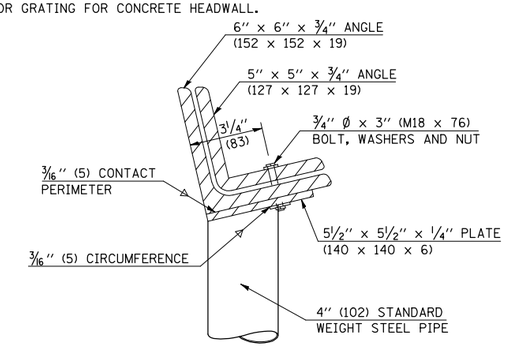

END VIEW OF SUPPORT

GRATING FOR CONCRETE HEADWALL 2@5'X3'
SN 010-8024 (STA. 799+50.00 LT. (1) REQ'D WEST)

FILE NAME = $FILEL$	USER NAME = $USER$	DESIGNED -	REVISED -	STATE OF ILLINOIS DEPARTMENT OF TRANSPORTATION	GRATING FOR CONCRETE HEADWALL		F.A.I RTE.	SECTION	COUNTY	TOTAL SHEETS / SHEET NO.
		DRAWN -	REVISED -				57	(10-34, 10-35)RS-2(SB)	CHAMPAIGN	66 / 46
	PLOT SCALE = $SCALE$	CHECKED -	REVISED -						CONTRACT NO. 70923	
	PLOT DATE = $DATE$	DATE -	REVISED -		SCALE:	SHEET NO. 1 OF 2 SHEETS / STA. TO STA.		ILLINOIS FED. AID PROJECT		