STATE OF ILLINOIS
DEPARTMENT OF TRANSPORTATION

ROUTE NO.	SECTION	COUNTY	TOTAL SHEETS	SHEET NO.
94/90	*	COOK	598	326
FED. ROAD DIST. NO. 1	ILLINOIS	FED. AID PROJECT		

62302 *(1818, ETC, 2324.6-1P)R-9

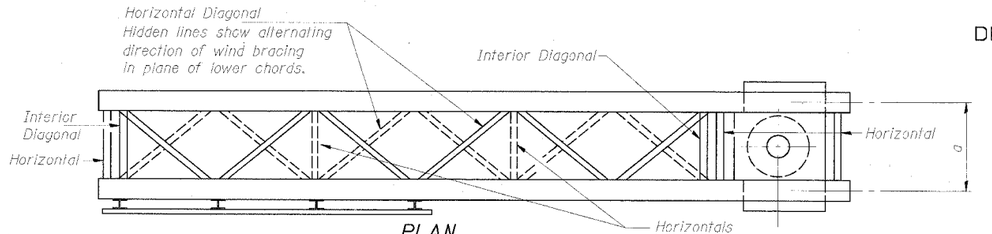

PLAN
(Walkway not shown)

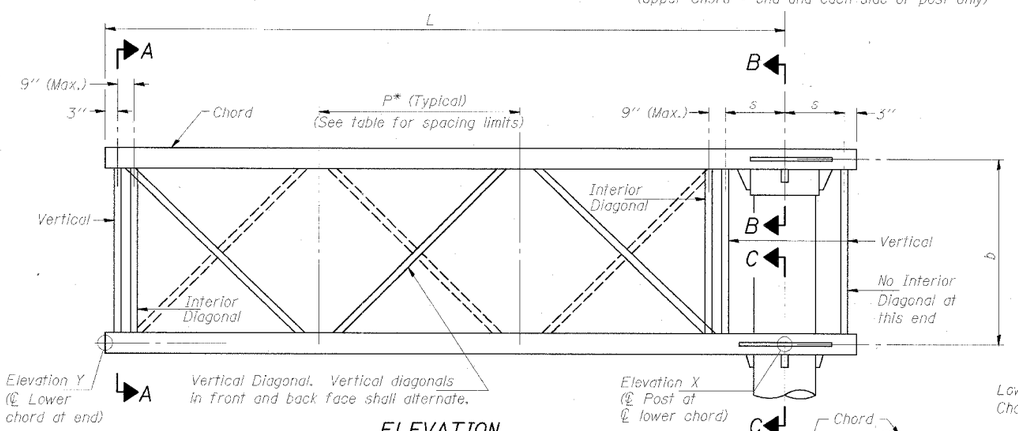

ELEVATION
(Sign and walkway omitted for clarity)

TYPICAL TRUSS UNIT
For Section B-B and Section C-C, see Base Sheet OSC-A-3.

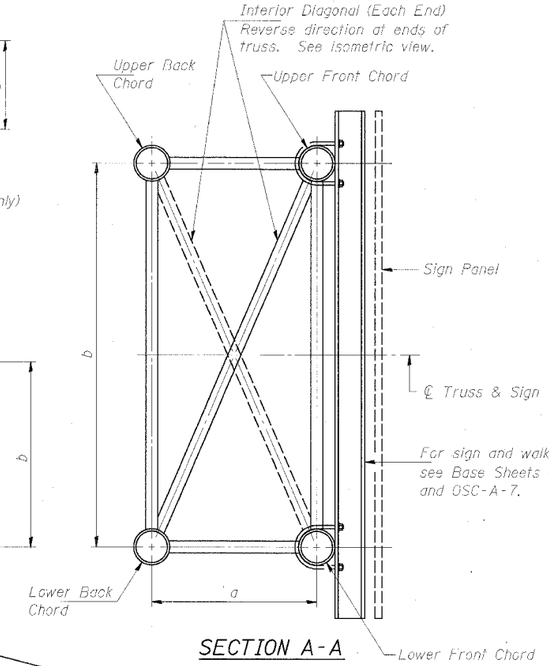

SECTION A-A

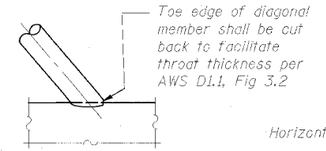

DETAIL A

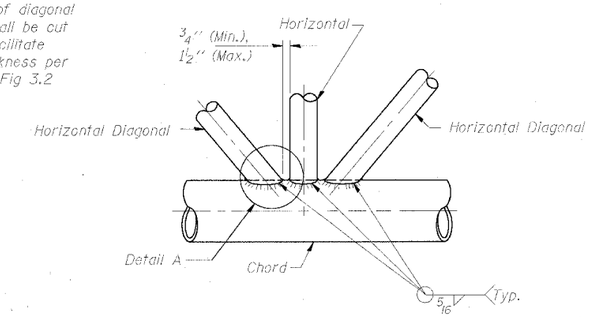

TRUSS INTERIOR JOINT DETAIL

Structure Number	Station	Truss Type	Design Length (L)	Number of Panels Per Unit	Panel Length (P)*
1C016I094R057.5	1486+00	III-C-A	33'-0"	7	4.43'
1C016I094R057.0	1514+30	II-C-A	29'-0"	7	3.857'

Note: There are twice as many horizontal diagonals as there are vertical diagonals.

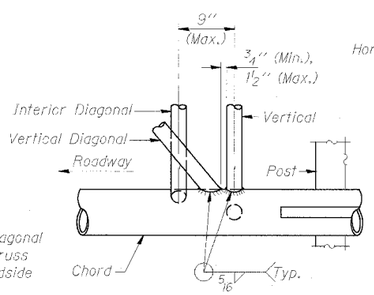

POST END JOINT DETAIL

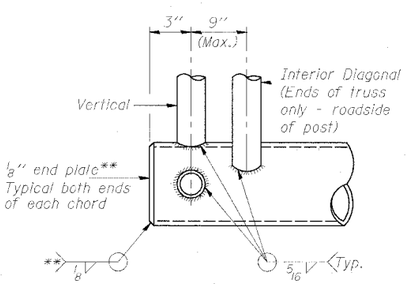

CANTILEVER END JOINT DETAIL
**Contractor may alternatively use standard aluminum drive-fit cap to close ends.

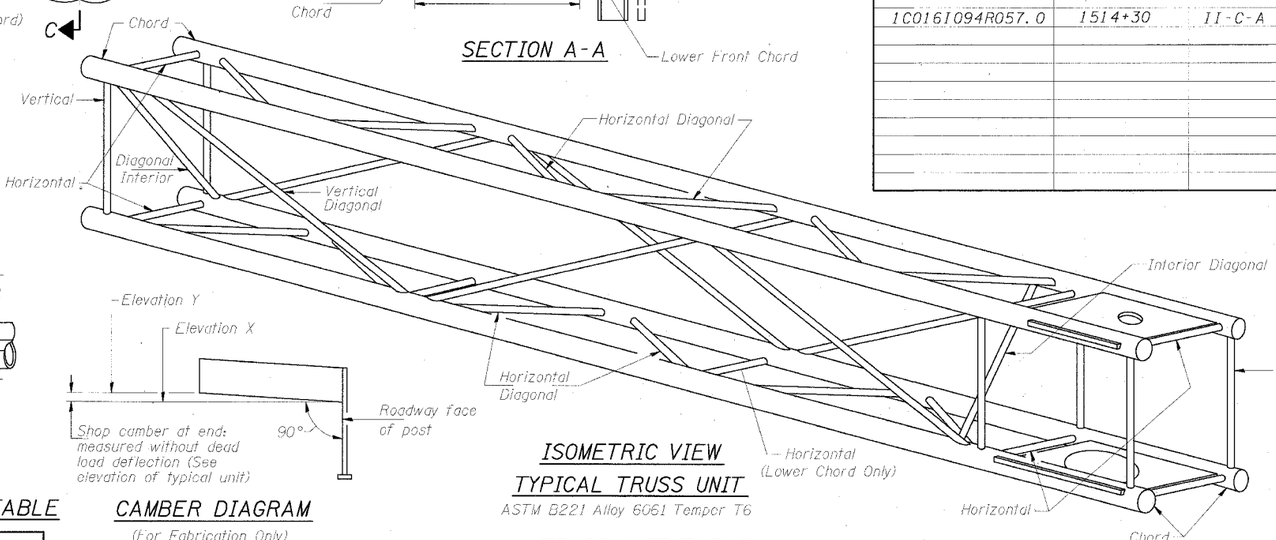

ISOMETRIC VIEW
TYPICAL TRUSS UNIT
ASTM B221 Alloy 6061 Temper T6

CAMBER DIAGRAM
(For Fabrication Only)

SHOP CAMBER TABLE

Unit Length (L)	Shop Camber at End
15'	1 1/2"
16'-17'	1 3/4"
18'-20'	2"
21'-22'	2 1/4"
23'-25'	2 1/2"
26'-27'	2 3/4"
28'-30'	3"
31'-32'	3 1/4"
33'-35'	3 1/2"
36'-37'	4"
38'-40'	4 1/2"

TRUSS UNIT TABLE

Truss Type	Dimension "a"	Dimension "b"	Dimension "s"	Limits for Panel Spacing (P)*	Up. & Low. Chord O.D.	Up. & Low. Chord Wall	Verticals; Horizontals; Vertical, Horizontal, and Interior Diagonals O.D.	Verticals; Horizontals; Vertical, Horizontal, and Interior Diagonals Wall
I-C-A	24"	54"	16"	36" Min. to 48" Max.	5"	5/16"	2 1/2"	5/16"
II-C-A	36"	66"	21"	42" Min. to 54" Max.	6 1/2"	5/16"	3 1/4"	5/16"
III-C-A (35' Max.)	36"	84"	21"	48" Min. to 66" Max.	7"	3/8"	3 1/2"	3/8"
III-C-A (>35' to 40')	36"	84"	21"	48" Min. to 66" Max.	8"	3/8"	3 1/2"	3/8"

$$*P = \frac{L - s - 3''}{\#\ \text{Panels}}$$

NUMBER	REVISION	DATE

SGN-29

DESIGNED	MSA
CHECKED	AS
DRAWN	MD
CHECKED	MSA

20
EXAMINED
ENGINEER OF STRUCTURAL SERVICES
PASSED
ENGINEER OF BRIDGES AND STRUCTURES

OSC-A-2 11/1/2002

CANTILEVER SIGN STRUCTURES
TRUSS DETAILS
ALUMINUM TRUSS & STEEL POST

ILLINOIS DEPARTMENT OF TRANSPORTATION
F.A.I. 94/90 (DAN RYAN EXPRESSWAY)
31ST STREET TO 71ST STREET
SB EXPRESS LANE RECONSTRUCTION
OVERHEAD SIGN STRUCTURES CANTILEVER