ROUTE	SECTION	COUNTY	TOTAL SHEETS	SHEET NUMBER
FA I-90	2010-056 BP	COOK	12	8

CONTRACT NO. 60L31

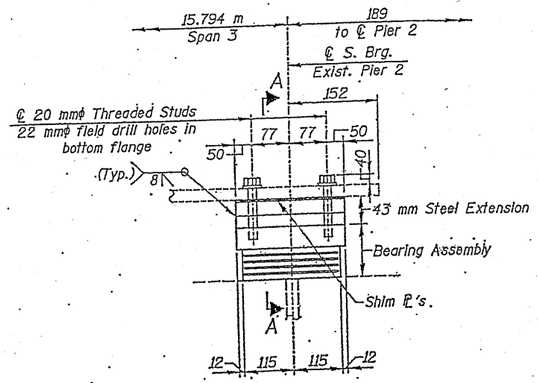

ELEVATION AT SOUTH BRG. AT EXIST. PIER 2

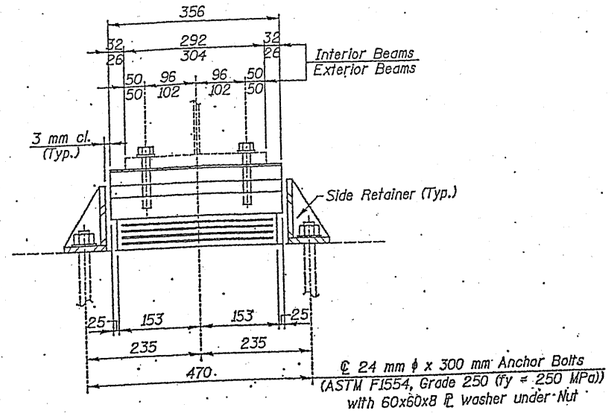

SECTION A-A

TYPE I ELASTOMERIC EXP. BRG. AT PIER 2

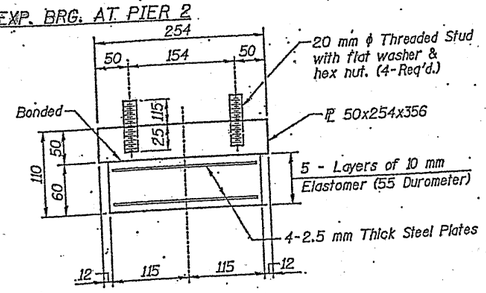

BEARING ASSEMBLY

Note: Shim plates shall not be placed under Bearing Assembly.

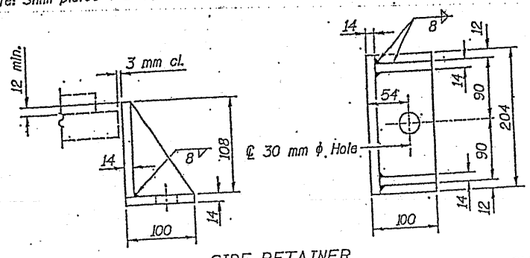

SIDE RETAINER

Equivalent rolled angle with stiffeners will be allowed in lieu of welded Plates.

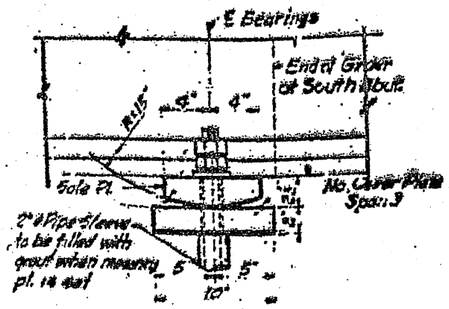

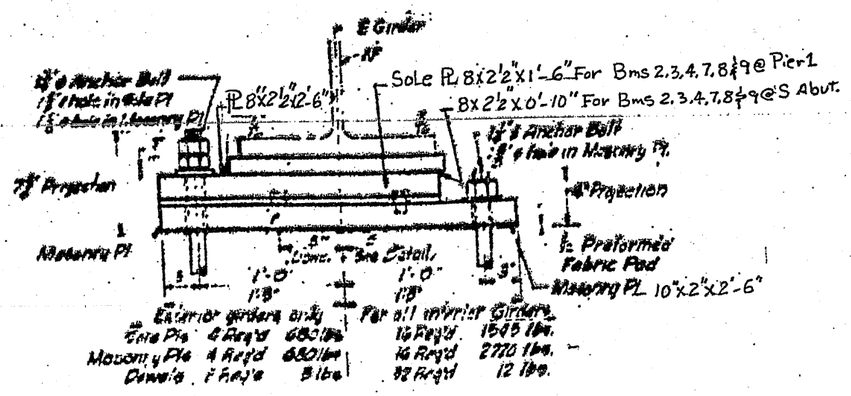

FIXED BEARING

DETAILS OF BEARING SHOES

BILL OF MATERIAL

Item	Unit	Total
Elastomeric Bearing Assembly, Type I	Each	10
Anchor Bolts, M24	Each	20

SHEET 3 OF 3

BEARING REPLACEMENT NOTES:

1. The Contractor shall submit for approval by the Engineer plans for Jacking Existing Superstructure prior to commencing any work at the Bearings. This submittal shall be prepared and sealed by a Licensed Structural Engineer in Illinois.
2. Jacking and Removing Existing Bearings shall be done after the existing Deck removal is completed and before the New Deck is poured.
3. The New Bearings shall be in place and the Jacks shall be lowered before the New Concrete Deck is poured.
4. Remove nuts from anchor bolts of bearings at the beams.
5. Raise bridge 7 mm maximum (See General Notes below).
6. Remove existing expansion bearings at North Abutment and at North & South bearings of Pier 2 (Existing Pier 1).
7. Install Elastomeric Expansion Bearing on the existing Pedestals.

GENERAL NOTES:

1. The Contractor shall supply additional shim plates if required to bring devices to grade. Cost included with Elastomeric Bearing Assembly, Type I.
2. Drilling holes for expansion bearings in flanges of existing beams and in existing substructure shall be included in Elastomeric Bearing Assembly, Type I.
3. It shall be the Contractor's responsibility to verify all dimensions between the bottom of the girder and the top of the bearing seat of the existing bearings in the field prior to construction or ordering of bearings.

FOR INFORMATION ONLY

ILLINOIS DEPARTMENT OF TRANSPORTATION

BEARING DETAILS
I-90 (JFK)
AT CENTRAL AVE. & CTA
SN 016-0659