STATE OF ILLINOIS
DEPARTMENT OF TRANSPORTATION

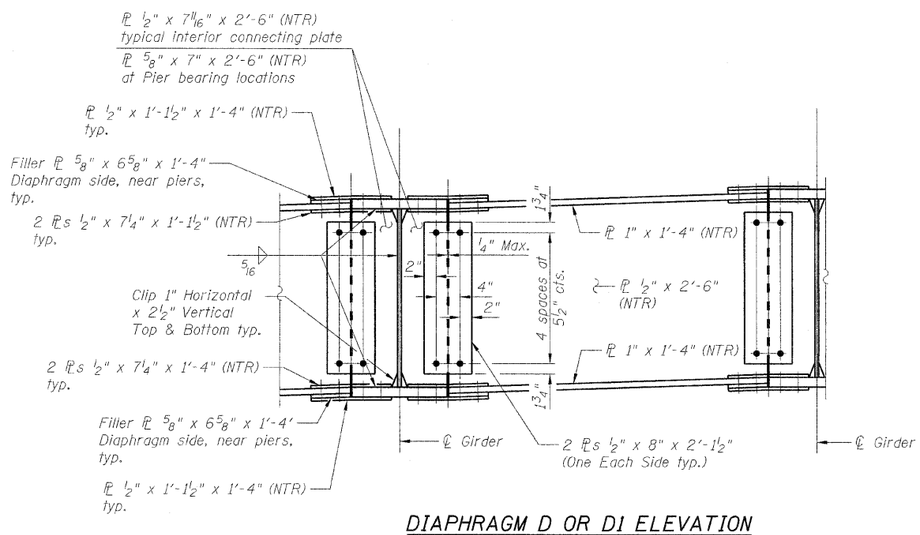

DIAPHRAGM D OR DI ELEVATION

"NTR" denotes plates to which notch toughness requirements are applicable.

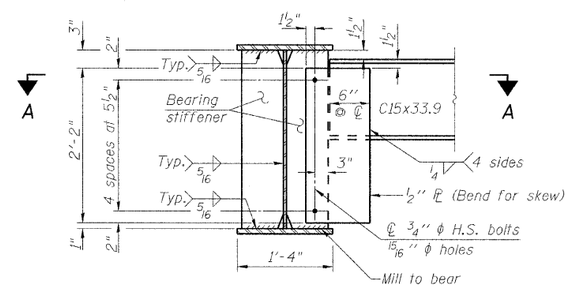

END DIAPHRAGM D2

Note: Two hardened washers required for each set of oversized holes.

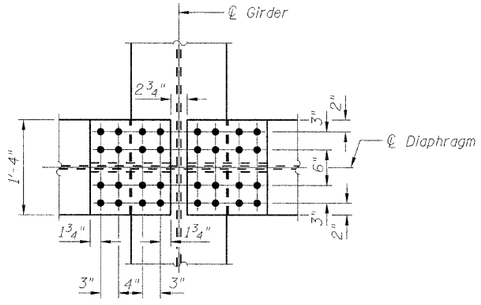

DIAPHRAGM D OR DI PLAN

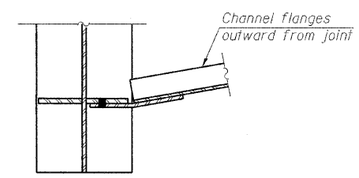

SECTION A-A

DESIGNED -	JY
CHECKED -	GSP
DRAWN -	MJB
CHECKED -	JY

DIAPHRAGM DETAILS
STRUCTURE NO. 101-0190

SHEET NO. 40	F.A.* RTE.	SECTION	COUNTY	TOTAL SHEETS	SHEET NO.
61 SHEETS	*	1-HBR & 1-2HB-D	WINNEBAGO	216	95
	IL RTE 251 & FOREST HILLS RD		CONTRACT NO. 64B79		
	FED. ROAD DIST. NO. 7	ILLINOIS	FED. AID PROJECT		

* F.A.P. 303 & F.A.U. 5146

ENTRAN

9302010 11:09:26 AM g:\project\2082773_001\cadd\structural\sheets\1010190-64B79-040-Diaphragm.dgn