STATE OF ILLINOIS
DEPARTMENT OF TRANSPORTATION

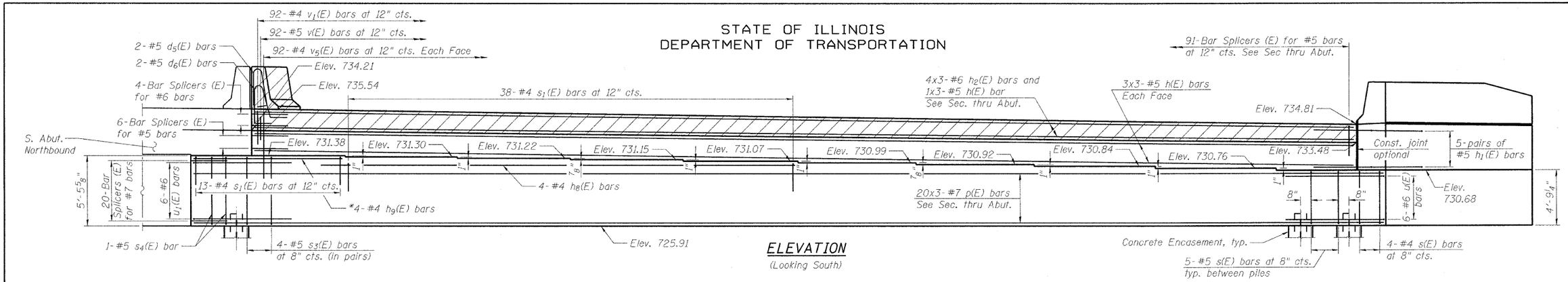

ELEVATION
(Looking South)

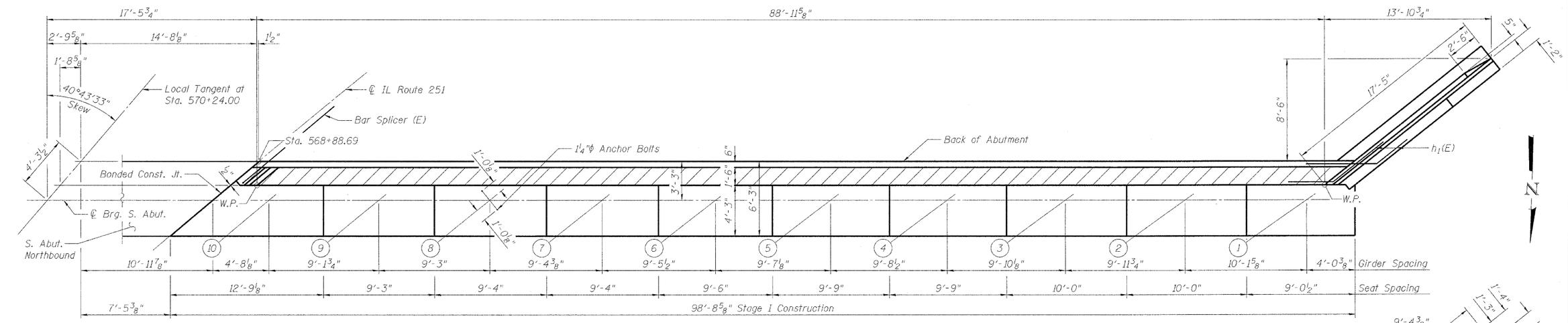

TOP VIEW

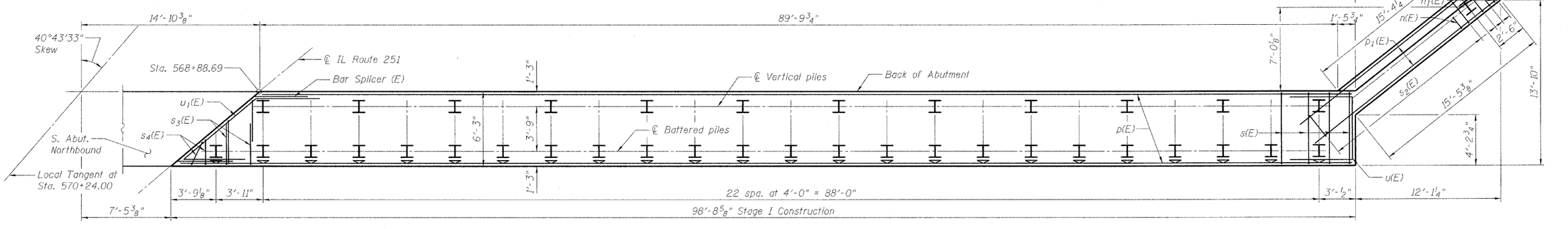

PLAN-PILE CAP

PILE DATA

Type: Steel HP 12x53 with pile shoes
Nominal Required Bearing: 273 kips
Factored Resistance Available: 150 kips
Est. Length: 23 ft
No. Production Piles: 36
No. Test Piles: 1

MINIMUM BAR LAPS

(Abutments)
#4 Bar - 2'-7"
#5 Bar - 3'-8"
#6 Bar - 4'-5"
#7 Bar - 5'-10"

Notes:
See Sheet 46 for Bill of Material.
See Sheet 47 for abutment sections, wingwall details and bar diagrams.

* Cut to fit.

SOUTH ABUTMENT - SOUTHBOUND
PLAN & ELEVATION
STRUCTURE NO. 101-0190

DESIGNED -	JY
CHECKED -	GSP
DRAWN -	MJB
CHECKED -	JY

SHEET NO. 45	F.A.• RTE.	SECTION	COUNTY	TOTAL SHEETS	SHEET NO.
61 SHEETS	*	1-HBR & 1-2HB-D	WINNEBAGO	216	100
	IL RTE 251 & FOREST HILLS RD		CONTRACT NO. 64B79		
	FED. ROAD DIST. NO. 7	ILLINOIS	FED. AID PROJECT		

* F.A.P. 303 & F.A.U. 5146

ENTRAN

9/30/2010 11:09:44 AM g:\project\2082773_001\cadd\structural\sheets\1010190-B4B79-045-S AbutPlan&EL_SB.dgn