STATE OF ILLINOIS
DEPARTMENT OF TRANSPORTATION

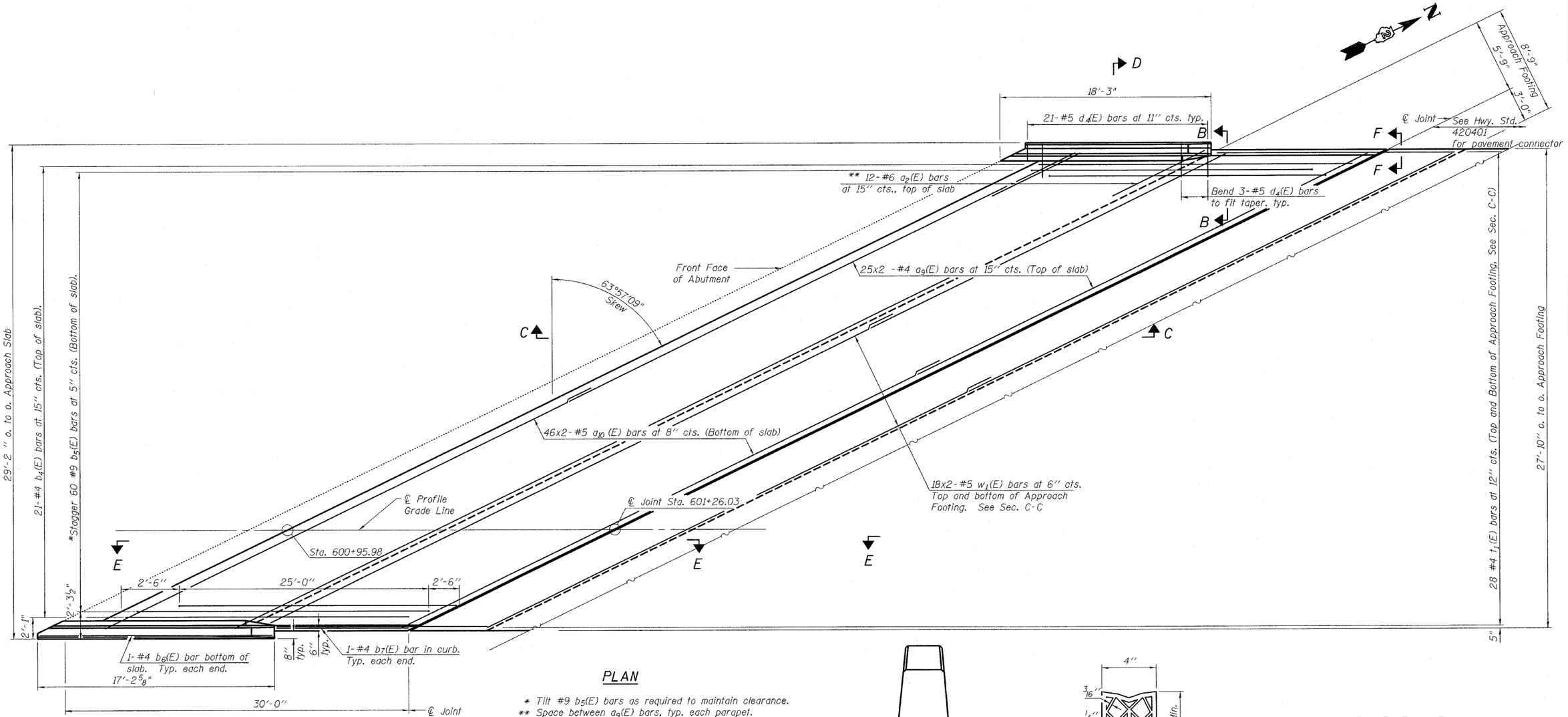

PLAN

* Tilt #9 b_5(E) bars as required to maintain clearance.
** Space between a_9(E) bars, typ. each parapet.
*** Cost included with Concrete Superstructure.

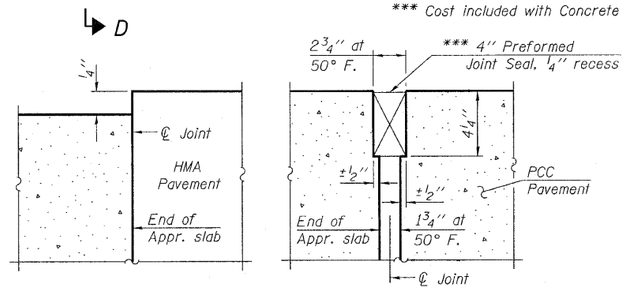

FLEXIBLE PAVEMENT

RIGID PAVEMENT

DETAIL A

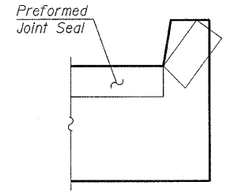

Angle Preformed Joint Seal at 45° at curbs when req'd for drainage.

VIEW F-F

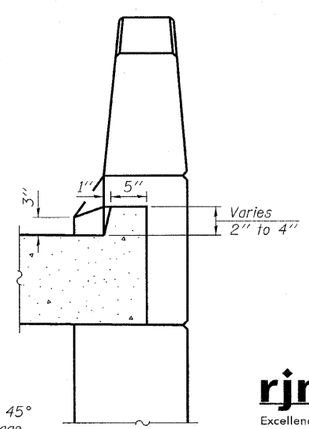

VIEW B-B

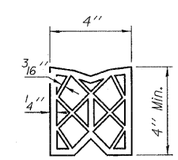

PREFORMED JOINT SEAL

MIN. BAR LAP

4 Bars = 2'-1"
5 Bars = 2'-7"

Notes:
See sheet 15 of 33 for Sections C-C & D-D and View E-E.
a_9(E) and a_{10}(E) bar spacings measured along ℄ of Roadway.

NORTH APPROACH SLAB
STRUCTURE NO. 101-0123

DESIGNED	PRD
CHECKED	MCB
DRAWN	PRD
CHECKED	MCB

rjngroup
Excellence through Ownership
200 West Front Street
Wheaton, IL 60187
PH. 630.682.4700

SHEET NO. 14 OF 33 SHEETS

F.A.P. RTE.	F.A.U. RTE.	SECTION	COUNTY	TOTAL SHEETS	SHEET NO.
303	5146	1-HBR & 1-2HB-D	WINNEBAGO	216	130
			CONTRACT NO. 64B79		
FED. ROAD DIST. NO. 2		ILLINOIS	FED. AID PROJECT		