STATE OF ILLINOIS
DEPARTMENT OF TRANSPORTATION

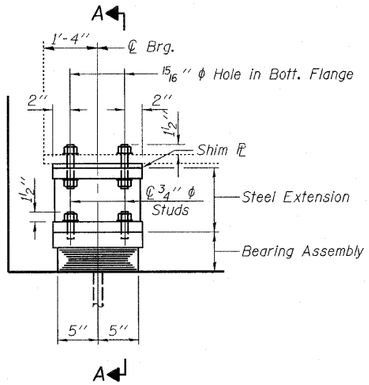


ELEVATION AT ABUT.

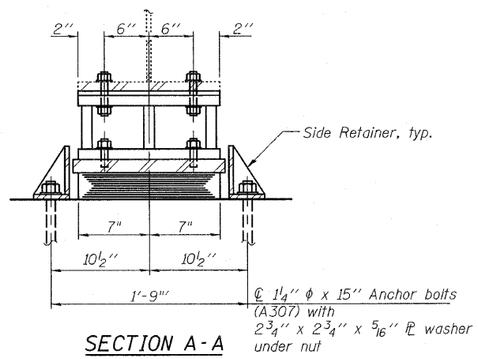


SECTION A-A

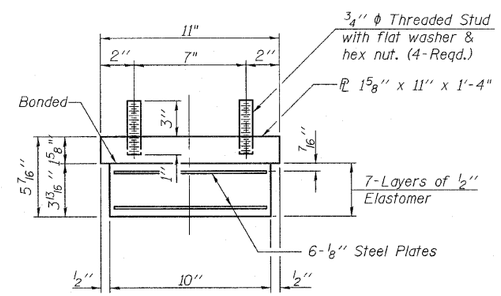


BEARING ASSEMBLY

Note:
Shim plates shall not be placed under Bearing Assembly.

TYPE I ELASTOMERIC EXP. BRG. (SOUTH ABUTMENT)

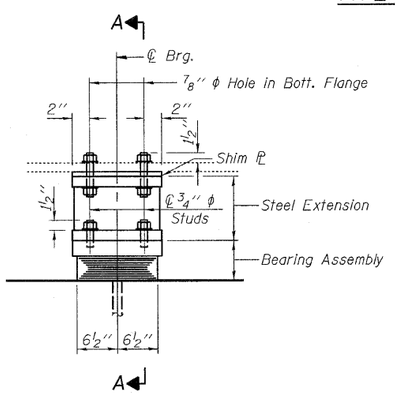


ELEVATION AT PIER 2

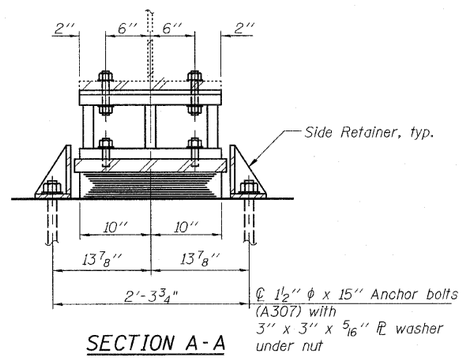


SECTION A-A

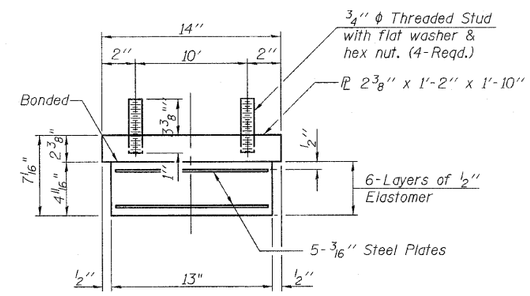


BEARING ASSEMBLY

Note:
Shim plates shall not be placed under Bearing Assembly.

TYPE I ELASTOMERIC EXP. BRG. (PIER 2)

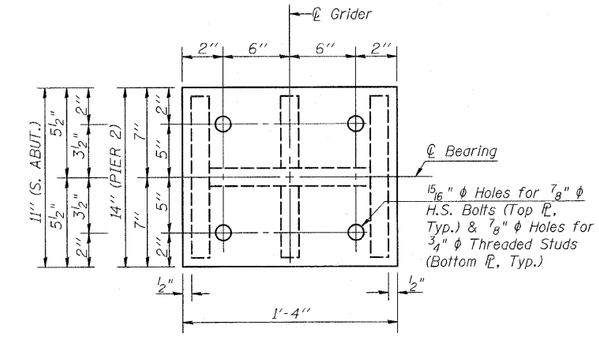


STEEL EXTENSION PLAN

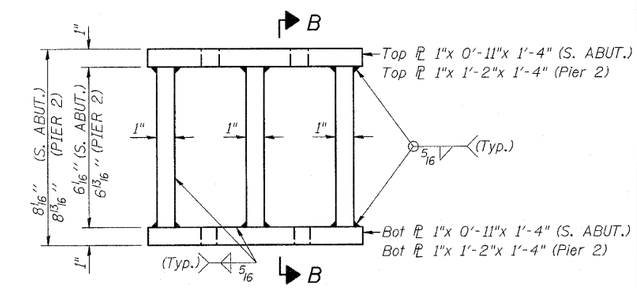


STEEL EXTENSION ELEVATION

BILL OF MATERIAL

| Item | Unit | Total |
|---|---|---|
| Elastomeric Bearing Assembly, Type I | Each | 8 |
| Anchor Bolts, 1 1/4" | Each | 8 |
| Anchor Bolts, 1 1/2" | Each | 8 |

Notes:
Anchor bolts shall be ASTM F1554 all-thread (or an Engineer-approved alternate material) of the grade(s) and diameter(s) specified. ASTM A307 Grade C anchor bolts may be used in lieu of ASTM F1554 Grade 36 (Fy=36ksi). The corresponding specified grade of AASHTO M314 anchor bolts may be used in lieu of ASTM F1554.

Anchor bolts for side retainers may be cast in place or installed in holes drilled before or after members are in place.

Drilled and set anchor bolts shall be installed according to Article 521.06 of the Standard Specifications.

Side retainers and other steel members required for the bearing assembly shall be included in the cost of Elastomeric Bearing Assembly, Type I.

See sheet 23 of 33 fot Jacking and Cribbing Procedures

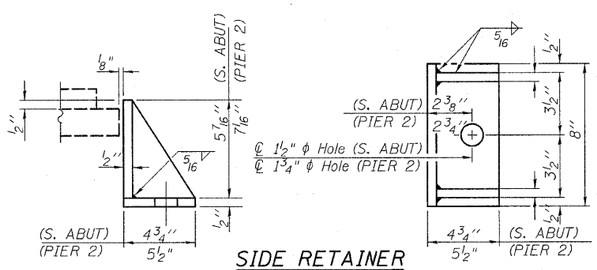


SIDE RETAINER

Equivalent rolled angle with stiffeners will be allowed in lieu of welded plates.

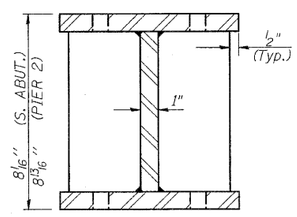


SECTION B-B

S. ABUTMENT AND PIER 2
ELASTOMERIC BEARING - TYPE I
STRUCTURE NO. 101-0123

| | |
|---|---|
| DESIGNED | PRD |
| CHECKED | KPS |
| DRAWN | PRD |
| CHECKED | KPS |

rjngroup
Excellence through Ownership
200 West Front Street
Wheaton, IL 60187
PH. 630.682.4700

SHEET NO. 22 OF 33 SHEETS

| F.A.P. RTE. | F.A.U. RTE. | SECTION | COUNTY | TOTAL SHEETS | SHEET NO. |
|---|---|---|---|---|---|
| 303 | 5146 | 1-HBR & 1-2HB-D | WINNEBAGO | 216 | 138 |
| | | | CONTRACT NO. 64B79 | | |
| FED. ROAD DIST. NO. 2 | | ILLINOIS | FED. AID PROJECT | | |