STATE OF ILLINOIS
DEPARTMENT OF TRANSPORTATION

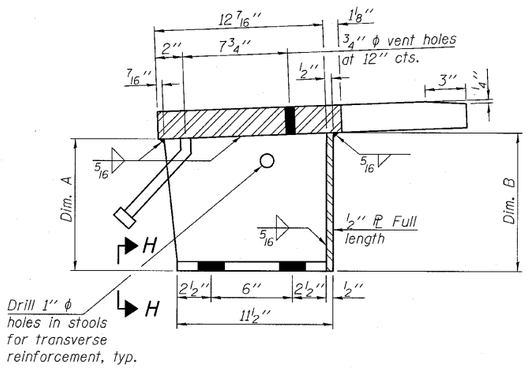

STOOLS NN-1 & SS-1

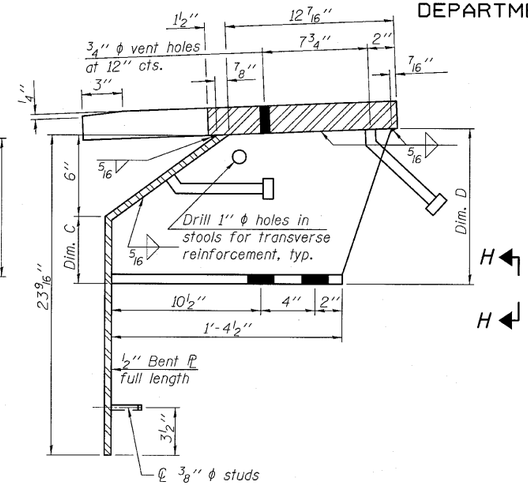

STOOLS NS-1 THRU NS-5
AND SN-1 THRU SN-5

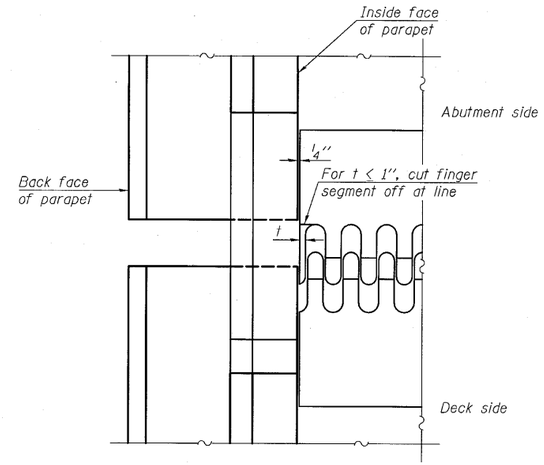

VIEW F-F

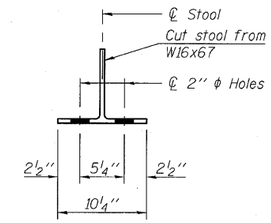

VIEW H-H

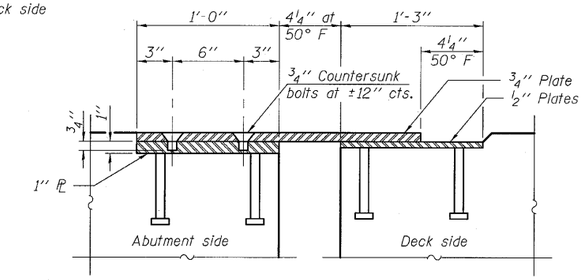

SECTION G-G

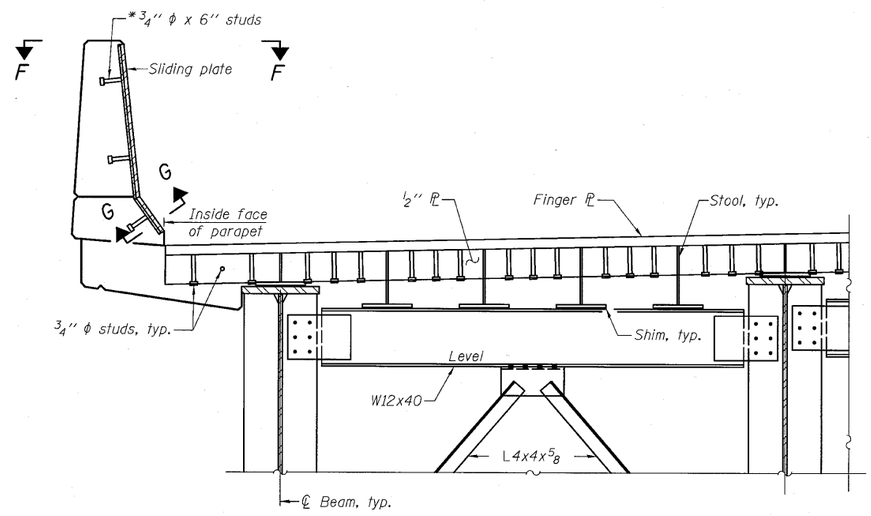

SECTION C-C

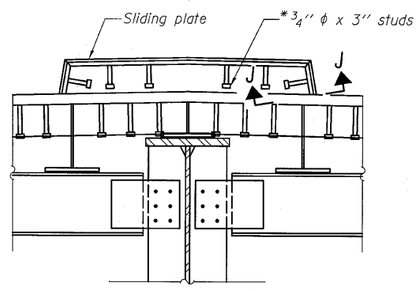

SECTION I-I

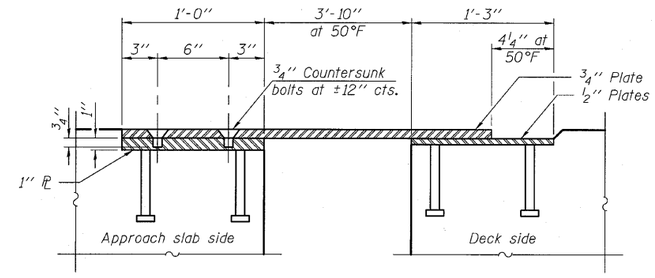

SECTION J-J

TABLE OF VARIABLE DIMENSIONS

Stool	Dim. A	Dim. B	Dim. C	Dim. D
NN-1	9 11/16"	10 3/16"	---	---
NS-1	---	---	15/16"	6 3/4"
NS-2	---	---	5 3/8"	11 7/8"
NS-3	---	---	5 13/16"	12 5/16"
NS-4	---	---	6 3/16"	12 3/4"
NS-5	---	---	6 5/8"	13 1/8"
SN-1	---	---	7/8"	6 11/16"
SN-2	---	---	5 3/8"	11 7/8"
SN-3	---	---	5 13/16"	12 1/4"
SN-4	---	---	6 1/4"	12 11/16"
SN-5	---	---	6 5/8"	13 1/8"
SS-1	9 5/8"	10 1/16"	---	---

BILL OF MATERIAL

Item	Unit	Quantity
Finger Plate Expansion Joint, 4"	Foot	112
Fabric Reinforced Elastomeric Trough	Foot	124

DESIGNED	KAK
CHECKED	JJD
DRAWN	KAK/AJF
CHECKED	JJD

* Granular or solid flux filled headed studs conforming to Art. 1006.32 of the Standard Specifications.

FINGER PLATE EXPANSION
JOINT DETAILS
STRUCTURE NO. 082-0038

HORNER & SHIFRIN, INC.
ENGINEERS

SHEET NO. 24	F.A.P. RTE.	SECTION	COUNTY	TOTAL SHEETS	SHEET NO.
48 SHEETS	312	64-1VBR	ST. CLAIR	259	76
			CONTRACT NO. 76882		
		ILLINOIS	FED. AID PROJECT		