STATE OF ILLINOIS
DEPARTMENT OF TRANSPORTATION

Joint Size "C" at 50°F	"D" at 50°F
2"	2" 1½" Min.
2½"	2½" 1¾" Min.
4"	3" 2½" Min.

INSTALLATION NOTES

1. Install sponge mandrels into positions shown to form flap connection.
2. Install parapet or sidewalk piece (trim roadway flap to fit before applying epoxy).
3. Install continuous seal in roadway.
4. Install anchor blocks as indicated.

NOTE A: Maximum spacing of anchor bolts shall be 12" centers.

SKEW LIMITATIONS

The details of the anchor blocks and the elastomeric membrane in the parapet, as shown, are for up to 50° skews.

For skews greater than 50°, the anchor blocks and the elastomeric membrane, installed in accordance with dimension "D", might require modifications to insure a minimum clearance of 1½" from centerline of anchor studs to edge of parapet opening. The anchor blocks and the elastomeric membrane shall also be installed to the top of the parapet with the anchor studs spaced at ±12" cts.

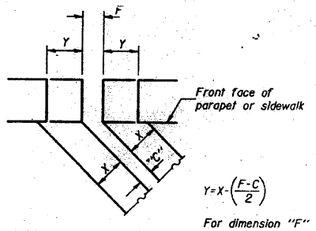

FORMING BLOCKOUT SKETCH

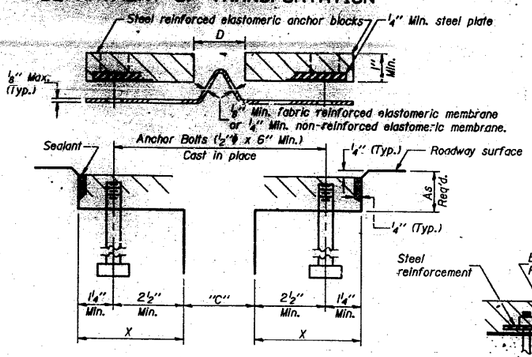

CROSS SECTION

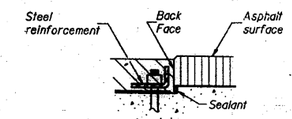

ANCHOR BLOCK REINFORCEMENT WITH ASPHALT SURFACE

GENERAL NOTES

Continuous Seal Neoprene Expansion Joint shall consist of molded anchor blocks of elastomer and steel, field assembled over continuous lengths of elastomeric membrane. See Special Provisions.

The elastomeric membrane shall be premolded with a single or a double upward convolution that will have a "memory" to return to its molded position upon joint closure.

The steel reinforcement must extend up the back face of anchor blocks when asphalt surfaces are used but is optional in concrete blockout.

The convolution length shall be such that the extended length will not be greater than the manufactured length when the joint is fully expanded in its design range and will not protrude above the anchor blocks when the joint is fully compressed.

Joint openings shall be adjusted in accordance with Article 503.07(c) of the Standard Specifications when the deck is poured at an ambient temperature other than 50° F.

The parapet and curb flaps may be furnished factory vulcanized to the roadway membrane provided the centerline of the convolution is maintained and the process and method meet the approval of the Engineer.

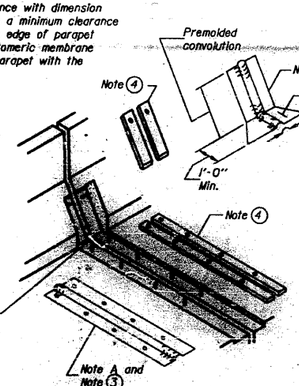

AT PARAPET

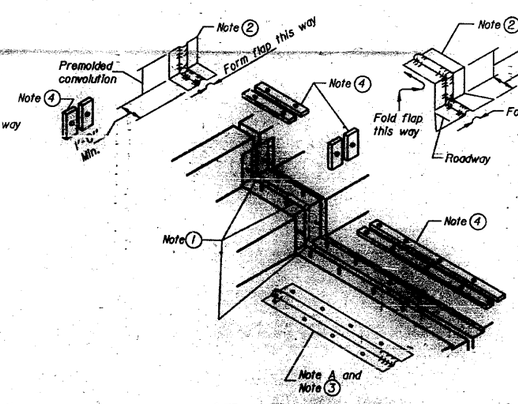

AT CURB OR MEDIAN

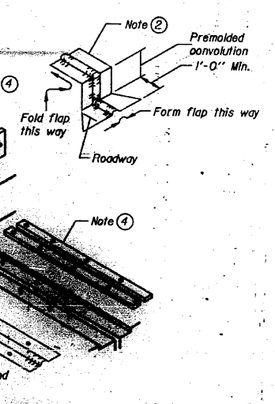

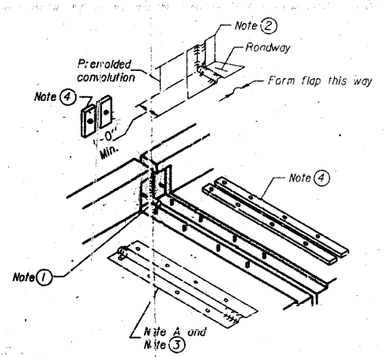

AT WALL

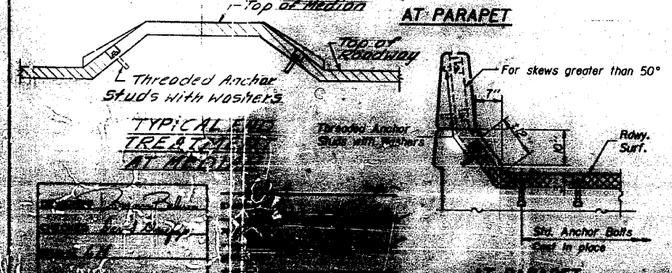

AT PARAPET

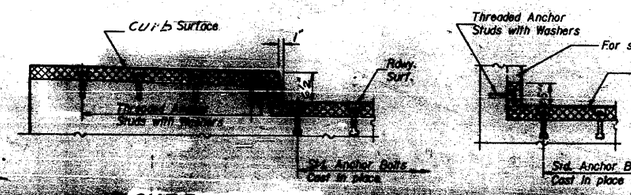

AT CURB

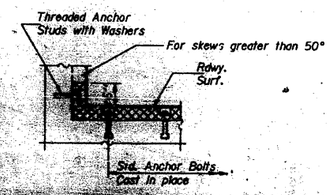

AT WALL

CONTINUOUS SEAL TYPE
NEOPRENE EXPANSION JOINTS
For 2", 2½" and 4" Movement

F.A. RTE. 14 SEC. 64-1VBI
ST. CLAIR COUNTY
STA. 218+07.13

FOR INFORMATION ONLY

Coombe-Bloxdorf P.C.
-CIVIL ENGINEERS-
-STRUCTURAL ENGINEERS-
-LAND SURVEYORS-
Design Firm License No. 184-002703

14	GHNBST	CLAIR	23	19	18 SHEETS				

FILE NAME = ...\155-D876882-exist-bridge-repair-plans-25.dgn	USER NAME = CFC..	DESIGNED -	REVISED -
		DRAWN -	REVISED -
	PLOT SCALE = 40.000000 ' / IN.	CHECKED -	REVISED -
CB JOB NO 09021	PLOT DATE = 8/5/2010	DATE - / /	REVISED -

STATE OF ILLINOIS
DEPARTMENT OF TRANSPORTATION

SN 082-0030 PLANS
(REHABILITATION PLANS)

SCALE: | SHEET NO. OF SHEETS | STA. TO STA.

F.A.P. RTE.	SECTION	COUNTY	TOTAL SHEETS	SHEET NO.
312	64-1VBR	ST. CLAIR	259	155

CONTRACT NO. 76882
ILLINOIS FED. AID PROJECT