STATE OF ILLINOIS

~~DIVISION OF HIGHWAYS~~

ROUTE NO.	SECTION	COUNTY	TOTAL SHEETS	SHEET NO.
S.B.I. FA 40	8BR	WHITESIDE	11	8
FED. ROAD DIST. NO. 2	ILLINOIS	FED. AID PROJECT		

SHEET NO. 8
9 SHEETS

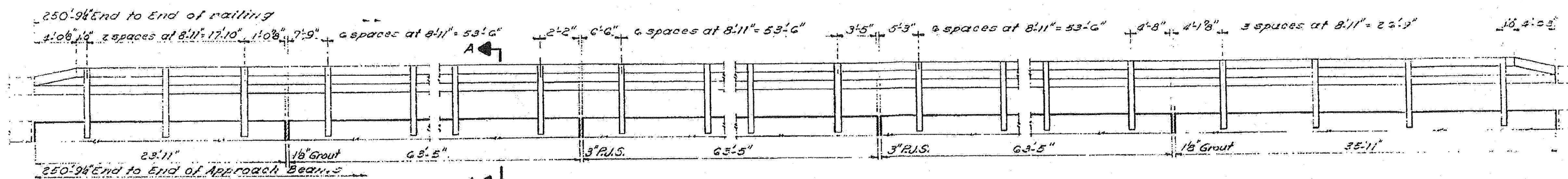

ELEVATION

Showing Outside Face of Railing

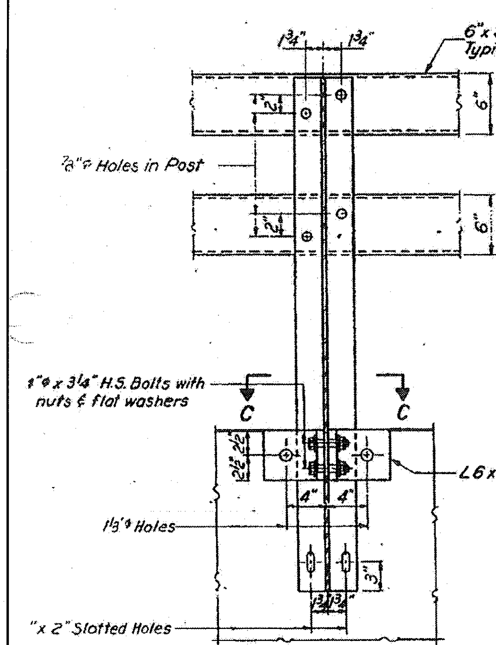

SECTION B-B

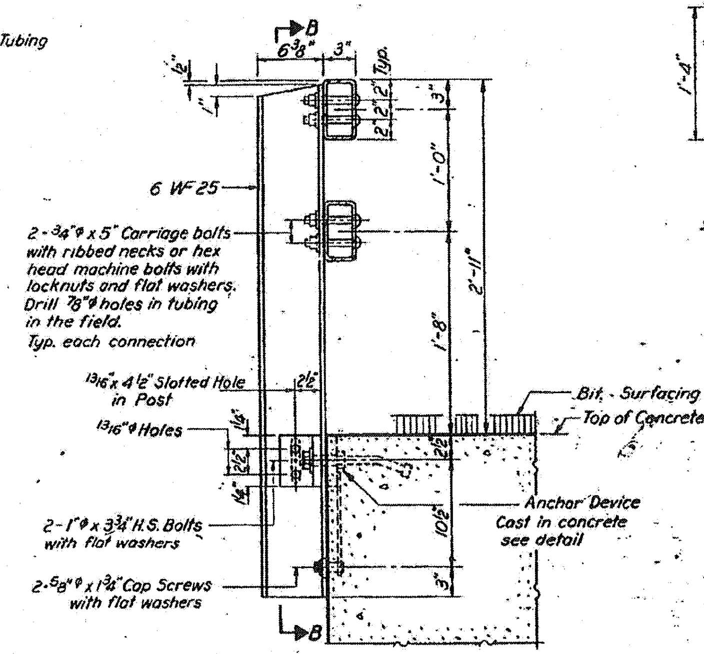

SECTION A-A

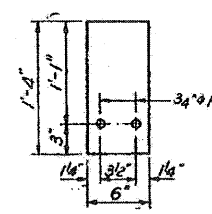

SHIM DETAIL

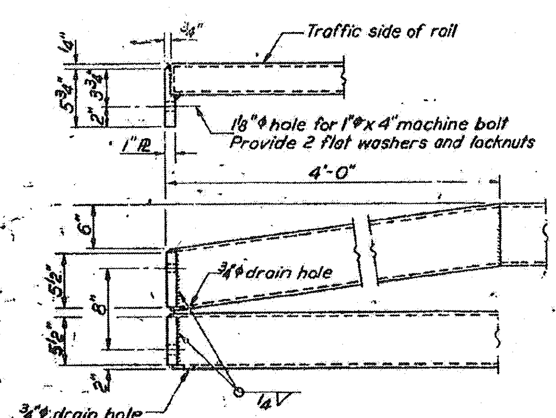

DETAIL A

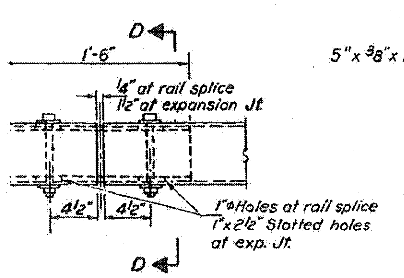

RAIL SPLICE

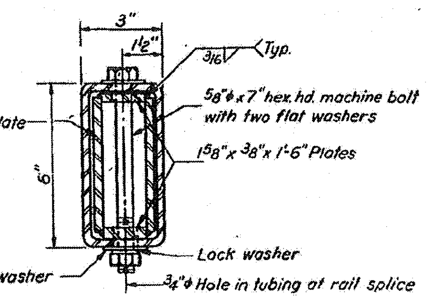

SECTION D-D

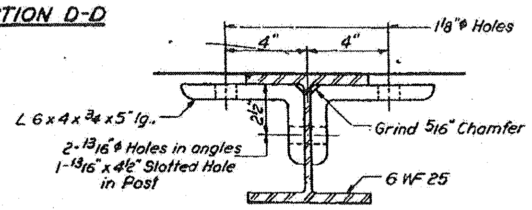

SECTION C-C

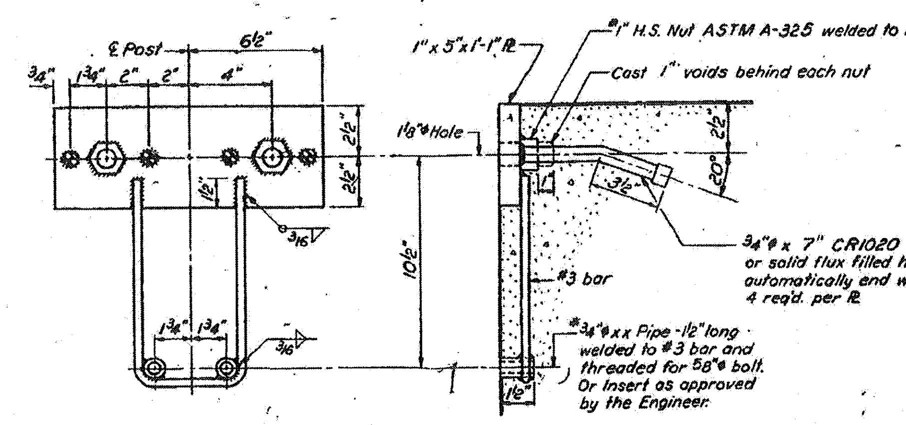

ANCHOR DEVICE

* Threaded areas shall be plugged or blocked off during casting of beam.

NOTES

Hollow structural steel tubing shall conform to the requirements of ASTM designation A-501 "Hot Formed Welded and Seamless Carbon Steel Structural Tubing."

All other steel shapes and plates shall conform to the requirements of ASTM designation A-36 except posts shall conform to ASTM A-441.

Bolts, cap screws, and nuts shall conform to the requirement of ASTM designation A-307 except for high strength bolts, nuts and washers noted which shall conform to ASTM designation A-325.

All bolts, nuts, cap screws, washers and lock washers shall be galvanized in accordance with ASTM designation A-153.

All posts, railing, rail splices, anchor devices and angles shall be galvanized after shop fabrication in accordance with ASTM designation A-123 and A-385. Galvanized rail shall not be painted.

Railing shall be in accordance with Section 508 of the Standard Specifications, except as noted, and shall be paid for at the contract unit price per lineal foot for STEEL RAILING, TYPE N

All field drilled holes shall be coated with an approved zinc rich paint before erection.

The lower portion of the post flange in contact with concrete shall receive two coats of asphalt paint conforming to Section 714.08 Type B or place ⅛" fabric bearing pad between the post and concrete.

The ¾"φ high strength bolts used to connect the 6x4x¾ angles to the post shall be tightened in accordance with Article 710.11 of the Standard Specifications. The 1"φ high strength bolts connecting the angles to the concrete beam shall be tightened to a snug fit and given an additional ⅛ turn.

For multi-span bridges, sufficient ¼"x 6"x 1'-4" galvanized steel shims shall be provided to align rail between adjacent spans. Cost incidental to Steel Railing.

BILL OF MATERIAL

Item	Unit	Quantity
STEEL RAILING, TYPE N	Lin. Ft.	502

TYPE N STEEL RAILING
FA 27 40 SEC. 8 BR
WHITESIDE COUNTY
STATION 1375+23.67

DESIGNED	[signature]
CHECKED	SHEN, TZAITA JK.
DRAWN	J.L. Armstrong CG
CHECKED	S.T.

EXAMINED April 9 1971 [signature] ENGINEER OF BRIDGE AND TRAFFIC STRUCTURES

PASSED ENGINEER OF DESIGN

APPROVED

(9'-0" Max Post Spacing)

EXISTING STRUCTURE PLANS – FOR REFERENCE ONLY

FILE NAME = P:\CBBEL WEST Projects\2009\124100_W09_IL40\Civil\Dgn\Sht\D284854-sht-msc6.dgn

WILLS BURKE KELSEY ASSOCIATES LTD.
116 West Main Street, Suite 201
St. Charles, Illinois 60174
(630) 443-7755

USER NAME = $USER$	DESIGNED -	REVISED -
	DRAWN -	REVISED -
PLOT SCALE =	CHECKED -	REVISED -
PLOT DATE = 8/2/2010	DATE - 8/6/10	REVISED -

STATE OF ILLINOIS
DEPARTMENT OF TRANSPORTATION

EXISTING STRUCTURE PLANS
FOR REFERENCE ONLY

SCALE: | SHEET NO. 66 OF 90 SHEETS | STA. | TO STA.

F.A.P. RTE.	SECTION	COUNTY	TOTAL SHEETS	SHEET NO.
646	8BR-1	WHITESIDE	90	66
		CONTRACT NO.84854		
FED. ROAD DIST. NO. 2	ILLINOIS	FED. AID PROJECT		