CONTROLLER SEQUENCE

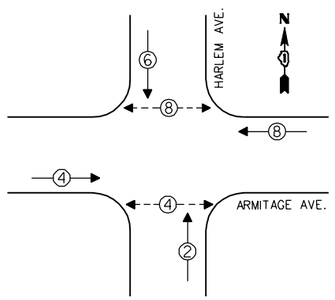

LEGEND

- DUAL ENTRY PHASE
- PEDESTRIAN PHASE
- * NUMBER REFERS TO ASSOCIATED PHASE

PHASE DESIGNATION DIAGRAM

EMERGENCY VEHICLE PREEMPTION SEQUENCE

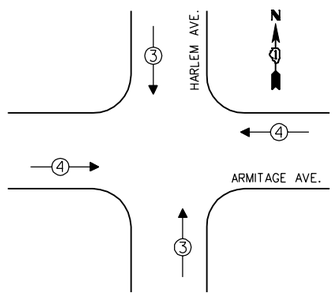

EMERGENCY VEHICLE PREEMPTORS		
EMERGENCY VEHICLE PREEMPTOR	3	4
MOVEMENT	↓↑	←→

NOTE:
CONTRACTOR TO MODIFY EXISTING CONTROLLER CABINET TO MODE 1 CABINET.

REMOVE EXISTING TRAFFIC SIGNAL EQUIPMENT

THE FOLLOWING ITEMS SHALL BE REMOVED BY THE CONTRACTOR AND SHALL BE DISPOSED OF BY THEM OUTSIDE THE RIGHT-OF-WAY AT THEIR EXPENSE. THE SALVAGE VALUE OF THE REMOVED EQUIPMENT SHALL BE REFLECTED IN THE CONTRACT BID PRICE.

QUANTITY	UNIT	DESCRIPTION
4	EACH	SIGNAL HEAD, 1-FACE, 3-SECTION
4	EACH	SIGNAL HEAD, 2-FACE, 3-SECTION
4	EACH	PEDESTRIAN SIGNAL HEAD, 1-FACE
4	EACH	PEDESTRIAN PUSH-BUTTON
3	EACH	TRAFFIC SIGNAL POST

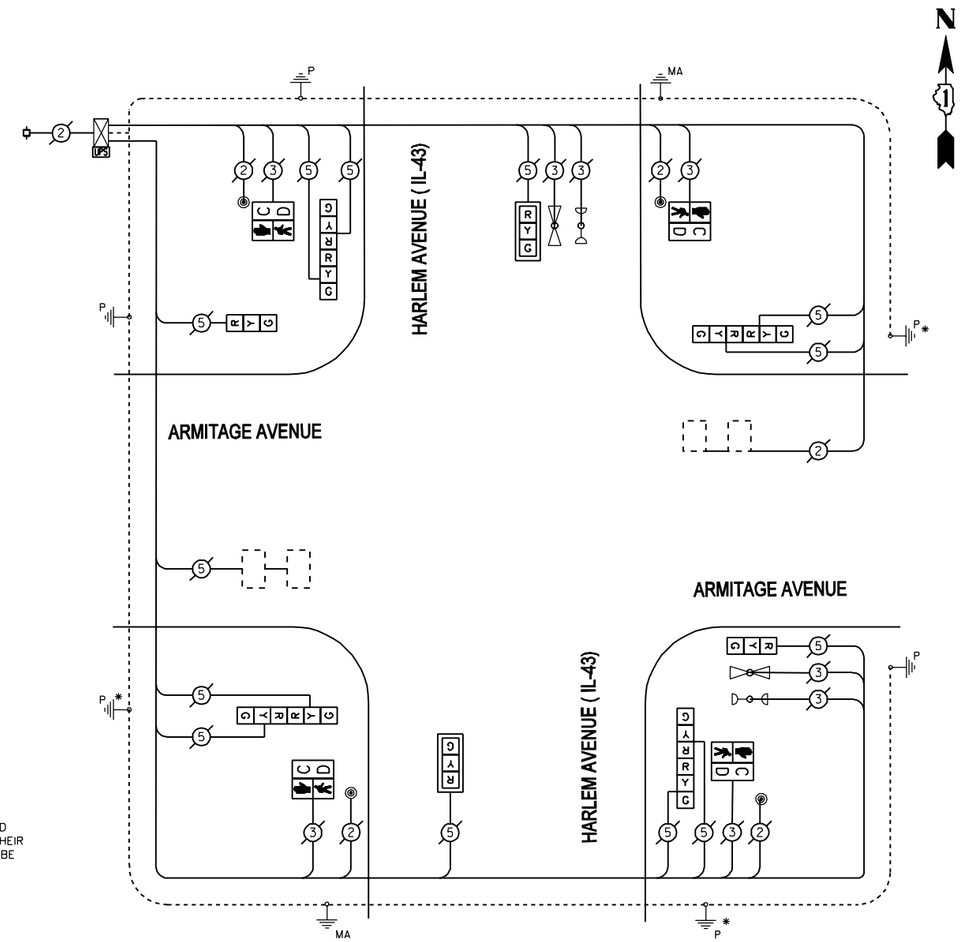

CABLE PLAN

I.D.O.T. TRAFFIC SIGNAL INSTALLATION ELECTRICAL SERVICE REQUIREMENTS					TOTAL WATTAGE
TYPE	NO. OF LAMPS	X	WATTAGE INCAND	WATTAGE LED	X % OPERATIONS
SIGNAL (RED)	12		17	0.50	102.0
(YELLOW)	12		25	0.25	75.0
(GREEN)	12		15	0.25	45.0
ARROW	0		12	0.10	0.0
PED. SIGNAL	4		25	1.00	100.00
CONTROLLER	1		100	1.00	100.00
ENERGY COSTS TO:				TOTAL =	422.0

VILLAGE OF ELMWOOD PARK
11 CONTI PKWY
ELMWOOD PARK, IL 60707

ENERGY SUPPLY - CONTACT: JOE STACHO
PHONE: (630) 424-5704
COMPANY: COMED

SCHEDULE OF QUANTITIES

QUAN.	UNIT	ITEM
1	EACH	MAINTENANCE OF EXISTING TRAFFIC SIGNAL INSTALLATION
3	EACH	TRAFFIC SIGNAL POST, GALVANIZED STEEL 14 FT.
2	EACH	SIGNAL HEAD, LED, 1-FACE, 3-SECTION, BRACKET MOUNTED
2	EACH	SIGNAL HEAD, LED, 1-FACE, 3-SECTION, MAST ARM MOUNTED
4	EACH	SIGNAL HEAD, LED, 2-FACE, 3-SECTION, BRACKET MOUNTED
4	EACH	PEDESTRIAN SIGNAL HEAD, LED, 1-FACE, BRACKET MOUNTED WITH COUNTDOWN TIMER
2	EACH	TRAFFIC SIGNAL BACKPLATE
4	EACH	PEDESTRIAN PUSH-BUTTON
1	EACH	REMOVE EXISTING TRAFFIC SIGNAL EQUIPMENT
1	EACH	MODIFY EXISTING CONTROLLER CABINET
1	EACH	UNINTERRUPTIBLE POWER SUPPLY, SPECIAL

THE TRAFFIC SIGNAL CONTROL EQUIPMENT FOR THIS SIGNAL SHALL BE "ECONOLITE" TO MATCH THE EXISTING ADJACENT SYSTEM.

2600 Warrenville Road, Suite 203, Downers Grove, IL 60515-1761
630.705.0110 voice, 630.839.2566 fax
www.mps-il.com
MILLENNIA PROFESSIONAL SERVICES

DESIGNED - JNP	REVISED -	STATE OF ILLINOIS DEPARTMENT OF TRANSPORTATION	SCHEDULE OF QUANTITIES, CABLE PLAN, PHASE DESIGNATION DIAGRAM, AND EMERGENCY VEHICLE PREEMPTION SEQUENCE ILLINOIS 43 /HARLEM AVENUE AT ARMITAGE AVENUE
DRAWN - JNP	REVISED -		
CHECKED - TVN	REVISED -		
DATE - 8/2/2013	REVISED -		SCALE: N/A SHEET NO. OF SHEETS STA. - TO STA.

F.A.P. RTE.	SECTION	COUNTY	TOTAL SHEETS	SHEET NO.
VAR	2013-035-TS	COOK	87	31
		CONTRACT NO. 60W72		
FED. ROAD DIST. NO. 1	ILLINOIS	FED. AID PROJECT		

FILE NAME = P:\2012\ME12014_PTB162.18_Schwartz\CADD\W03 _Central_Cook_LED\Shts\60W72-sht-TS-IL43-HarlemAve_ArmitageAve.dgn
PLOT SCALE = 40.0001 ' / IN.
USER NAME = Millennia Professional Services