Notes:
Hatched area to be poured after superstructure false work has been removed. Quantity of concrete included with Concrete Superstructure.
Space reinforcement in cap to miss anchor bolts.
Pour steps monolithically with cap.
Quantity of concrete in end post included with Concrete Superstructure on sheet 20 of 50.
See sheet 44 of 50 for additional form liner details.
Form liner shall be placed on outside face of wingwalls as shown in the wingwall elevation shown below.
For bar splicer details, see sheet 46 of 50.

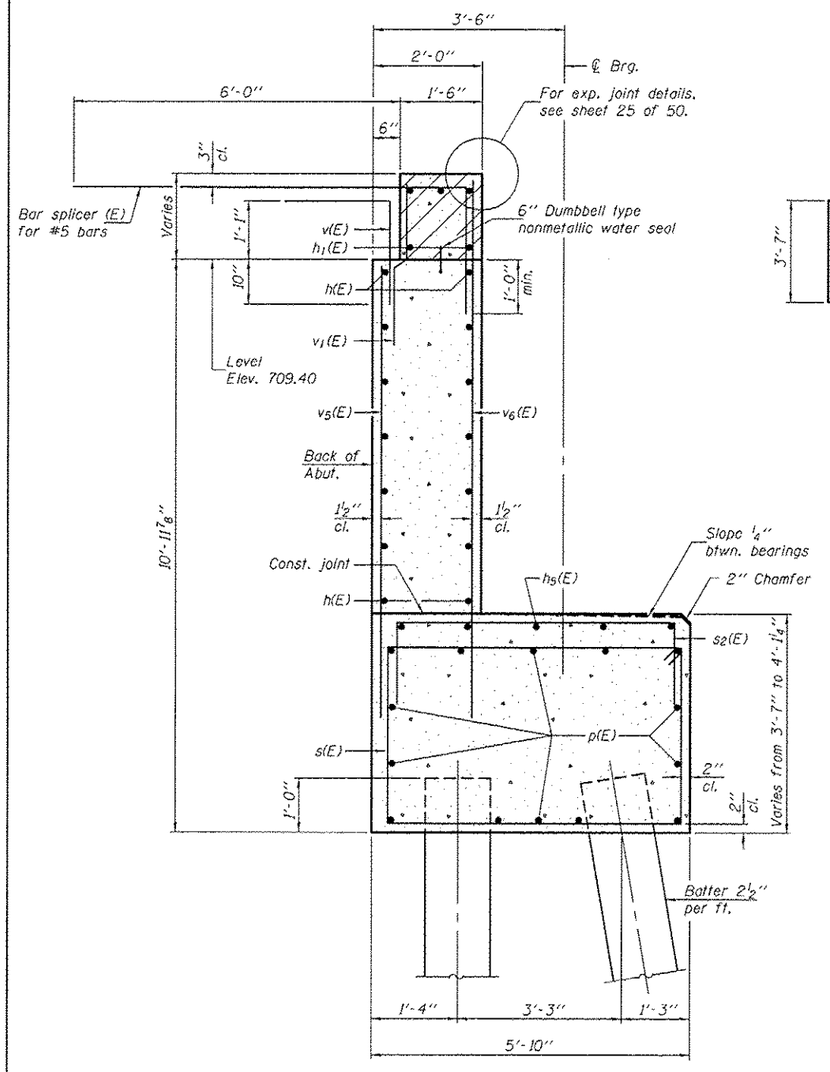

SECTION THRU
WEST ABUTMENT

*Elevations are given at front face of hatched block.

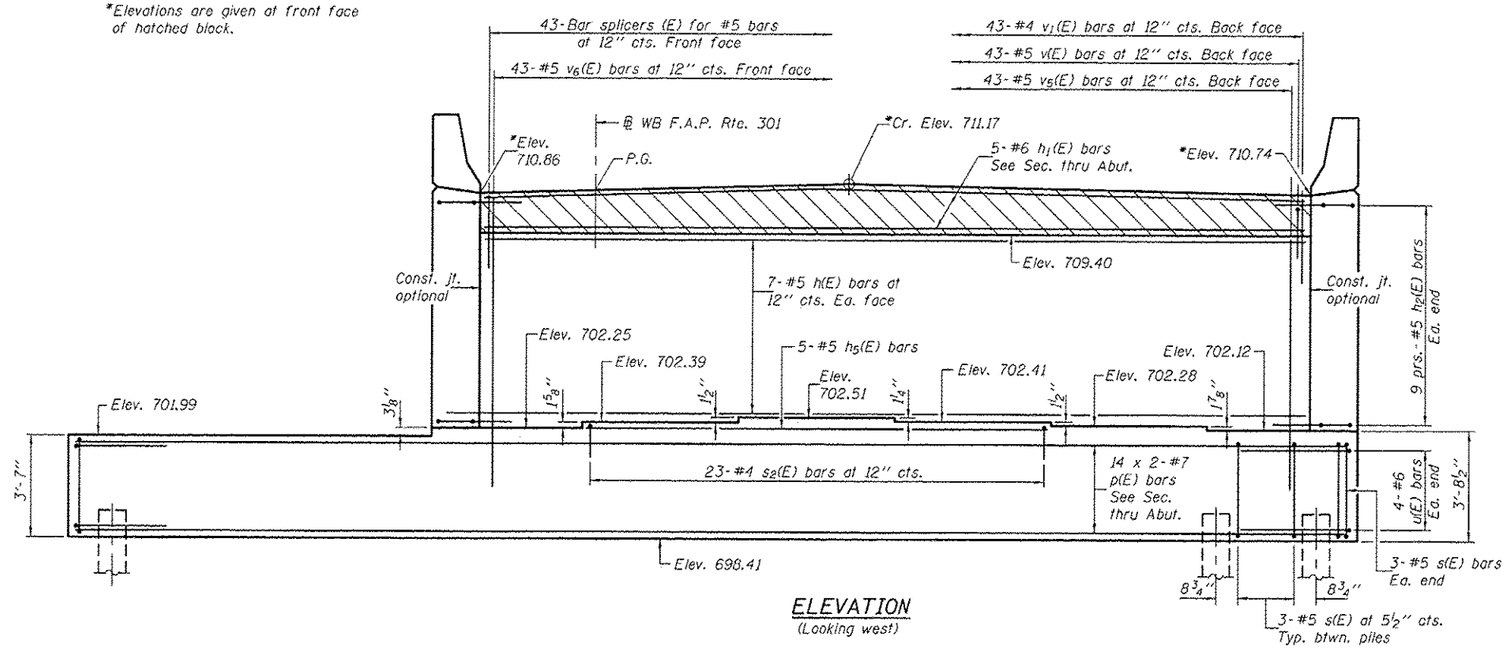

ELEVATION
(Looking west)

MIN. BAR LAP
#7 bar = 5'-2"

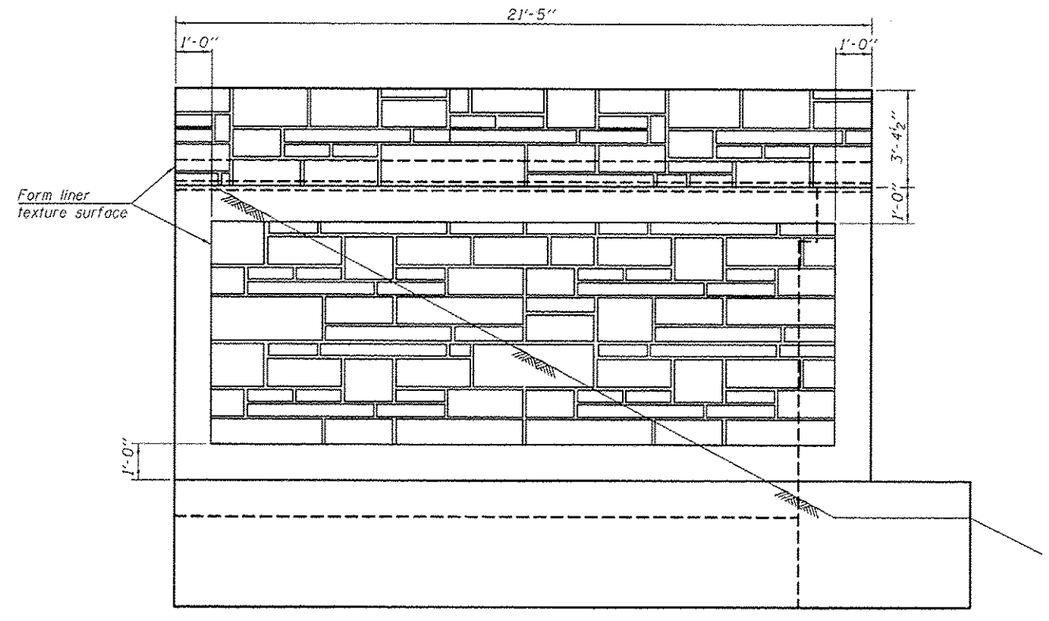

WINGWALL ELEVATION
(South wingwall shown, North wingwall similar).

DESIGNED - Nick R. Barnett	EXAMINED	DATE - OCTOBER 4, 2013	STATE OF ILLINOIS DEPARTMENT OF TRANSPORTATION
CHECKED - Frank W. Sharpe	ACTING ENGINEER OF BRIDGE DESIGN		
DRAWN - h.t. duong	PASSED	REVISED —	
CHECKED - NRB/FWS/GRA	ACTING ENGINEER OF BRIDGES AND STRUCTURES	REVISED —	

WEST ABUTMENT (W.B.) – STAGE II CONSTRUCTION
STRUCTURE NO. 101-0197 (E.B.) & 101-0198 (W.B.)
SHEET NO. 37 OF 50 SHEETS

F.A.P. RTE.	SECTION	COUNTY	TOTAL SHEETS	SHEET NO.
301	3BR & 3BR-1	WINNEBAGO	290	212
		CONTRACT NO. 64D19		
		ILLINOIS FED. AID PROJECT		