Notes:
Hatched area to be poured after superstructure false work has been removed. Quantity of concrete included with Concrete Superstructure.
Space reinforcement in cap to miss anchor bolts.
Pour steps monolithically with cap.
Quantity of concrete in end post included with Concrete Superstructure on sheet 31 of 50.
See sheet 44 of 50 for additional form liner details.
Form liner shall be placed on outside face of wingwalls as shown in the wingwall elevation shown below.
For bar splicer details, see sheet 46 of 50.

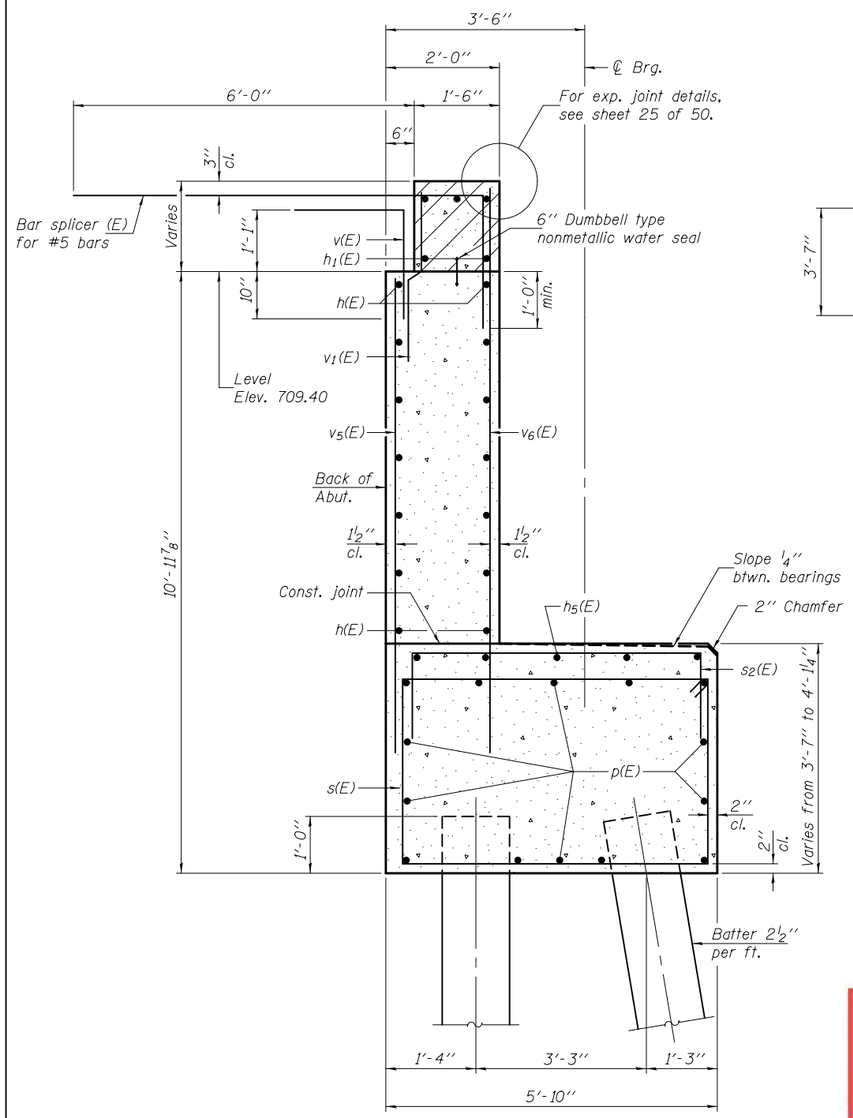

SECTION THRU
WEST ABUTMENT

*Elevations are given at front face of hatched block.

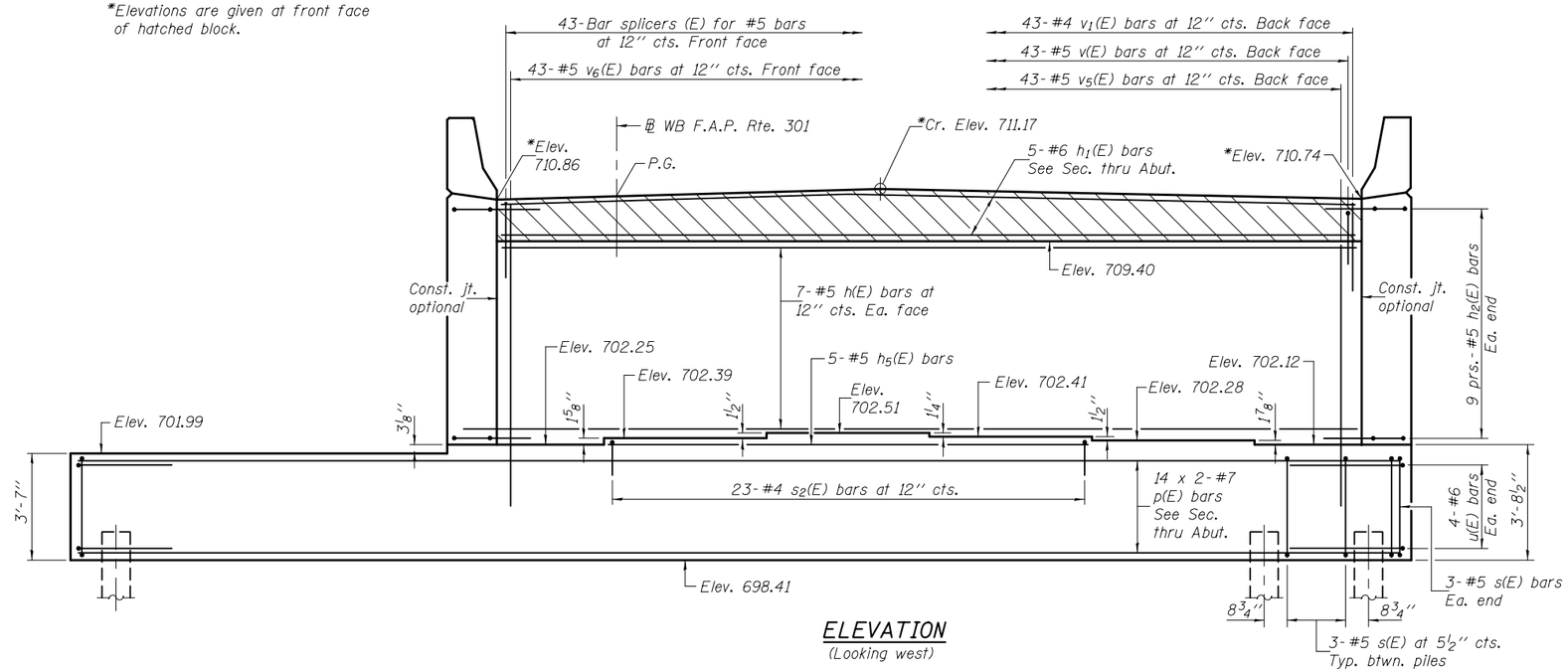

ELEVATION
(Looking west)

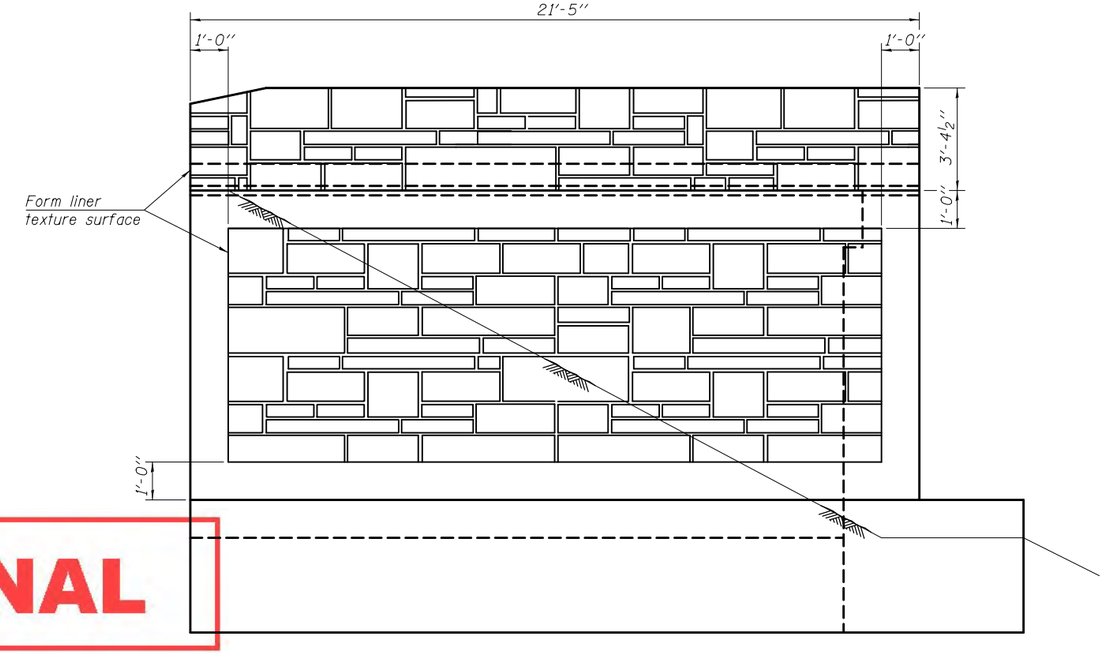

WINGWALL ELEVATION
(South wingwall shown. North wingwall similar).

PRE-FINAL

MIN. BAR LAP
#7 bar = 5'-2"

DESIGNED - Nick R. Barnett	EXAMINED	DATE -	STATE OF ILLINOIS DEPARTMENT OF TRANSPORTATION
CHECKED - Frank W. Sharp	ACTING ENGINEER OF BRIDGE DESIGN		
DRAWN - h.t. duong	PASSED	REVISED	
CHECKED - NRB/FWS/GRA	ACTING ENGINEER OF BRIDGES AND STRUCTURES	REVISED	

WEST ABUTMENT (W.B.) – STAGE II CONSTRUCTION
STRUCTURE NO. 101-0197 (E.B.) & 101-0198 (W.B.)
SHEET NO. 37 OF 50 SHEETS

F.A.P. RTE.	SECTION	COUNTY	TOTAL SHEETS	SHEET NO.
301	3BR & 3BR-1	WINNEBAGO		
		CONTRACT NO. 64D19		
	ILLINOIS	FED. AID PROJECT		