| ROUTE NO. | SEC. | COUNTY | TOTAL SHEETS | SHEET NO. |
|---|---|---|---|---|
| F.A. 194 | 3B1 3F1 | WINNEBAGO | 25 / 17 | 13 |
| STA. | | TO STA. | | |
| FED. ROAD DIST. NO. 7 | ILLINOIS | | | |

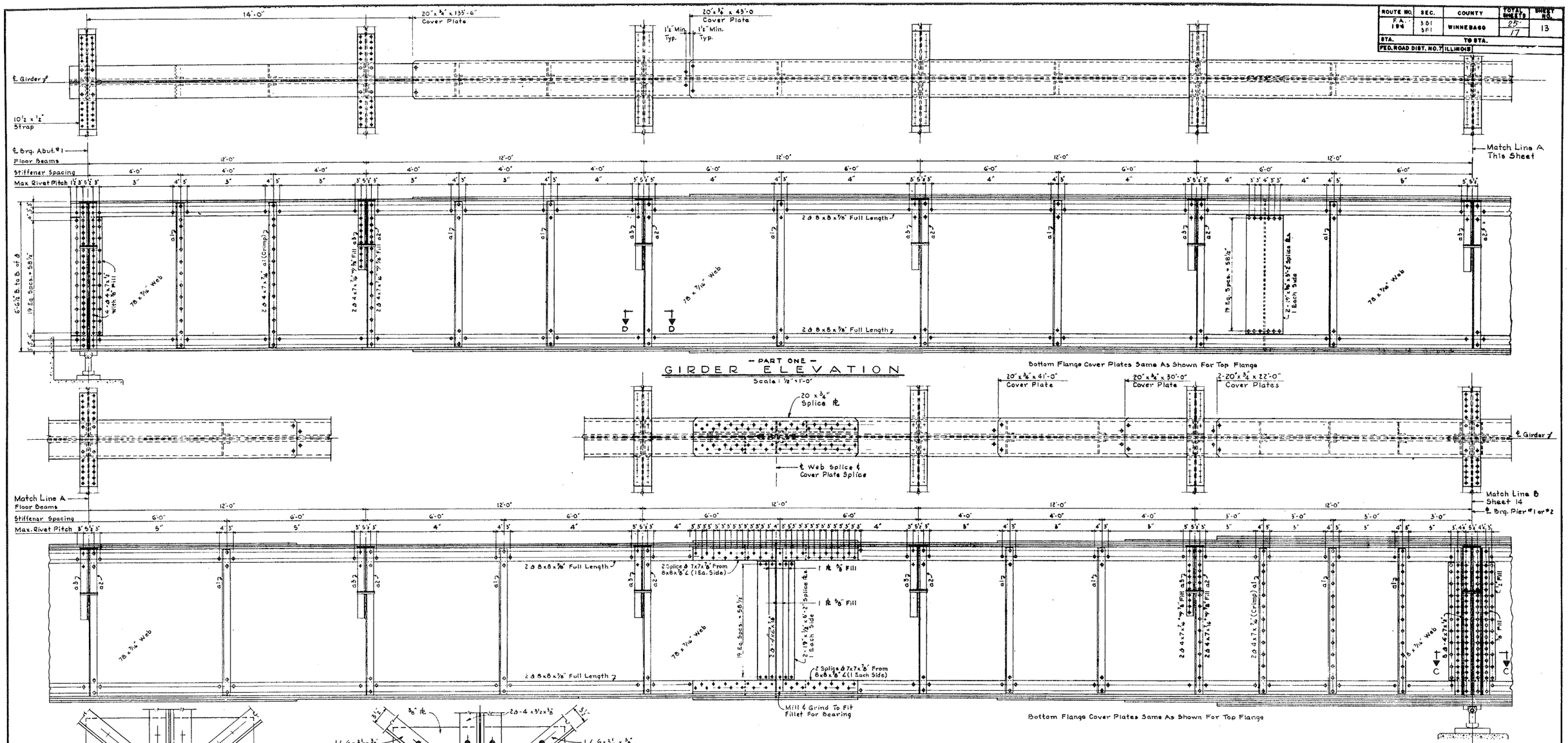


— PART ONE —

GIRDER ELEVATION

Scale: 1/2" = 1'-0"

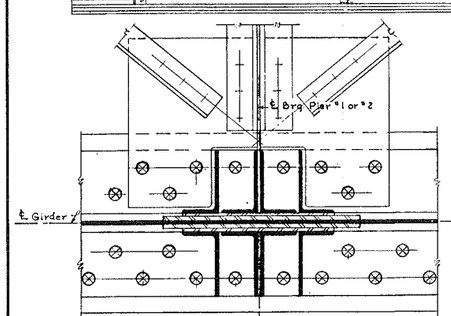


SECTION C-C

Scale: 1 1/2" = 1'-0"

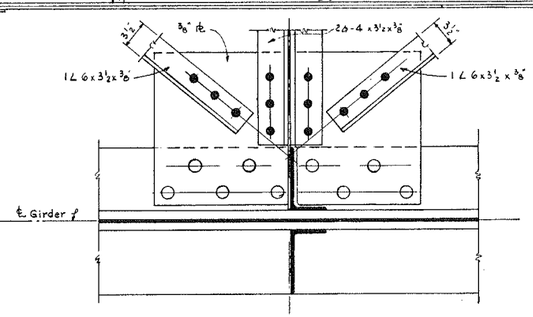


Note:
Detail Occurs At Cross Frames Only
For Cross Frame Location See Drwg. # 11.

SECTION D-D

Scale: 1 1/2" = 1'-0"

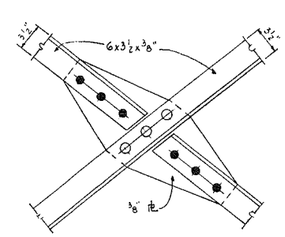


DETAIL X

Scale: 1 1/2" = 1'-0"

NOTE:
For Notes See Sheet 12.

ILLINOIS DIVISION OF HIGHWAYS
ROCKFORD BYPASS

F. A. ROUTE 194

PROJECT _____ SECTION 3B1

WINNEBAGO COUNTY

GIRDER DETAILS PART I

Designed By: E.S. | Drawn By: G.W.G. | Checked By:

MASSAGE, CAMPBELL & ASSOCIATES CONSULTING ENGINEERS
WESTON, MADISON STREET CHICAGO, ILLINOIS

FOR INFORMATION ONLY