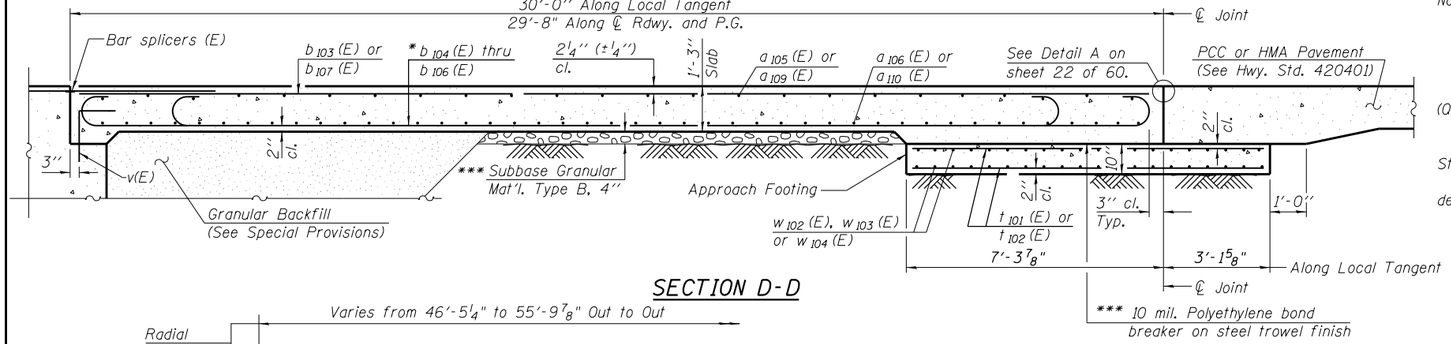

SECTION D-D

Notes:

Approach slab and sidewalk shall be paid for as Concrete Superstructure.
Approach footing concrete shall be paid for as Concrete Structures.
Reinforcement shall be paid for as Reinforcement Bars, Epoxy Coated.
For v(E) bar details, see sheet 33 of 60.
The approach footing maximum applied service bearing pressure (Qmax) = 2.0 ksf.
For bar splicer details, see sheet 39 of 60.
Cost of excavation for approach footing included with Concrete Structures.
For Granular Backfill and drainage treatment details, see sheet 2 of 60.
See Roadway Plans for additional sidewalk details not shown.

* Tilt #9 b 104 (E), b 105 (E), b 106 (E), and b 110 (E) bars as required to maintain clearance.

*** Cost included with Concrete Superstructure.

NORTH APPROACH SLAB BILL OF MATERIAL

Bar	No.	Size	Length	Shape
a 105 (E)	25	#4	15'-2"	
a 106 (E)	46	#5	15'-2"	
a 107 (E)	25	#4	4'-8"	
a 108 (E)	46	#5	4'-8"	
a 109 (E)	25	#4	33'-8"	
a 110 (E)	46	#5	33'-8"	
a 111 (E)	17	#4	5'-1"	
a 112 (E)	33	#5	5'-1"	
a 113 (E)	1	#4	15'-1"	
a 114 (E)	1	#5	16'-0"	
b 103 (E)	45	#4	29'-4"	
b 104 (E)	112	#9	29'-5"	
b 105 (E)	11	#9	28'-7"	
b 106 (E)	11	#9	26'-0"	
b 107 (E)	8	#4	28'-6"	
b 108 (E)	8	#5	8'-0"	
b 109 (E)	5	#4	21'-2"	
b 110 (E)	13	#9	19'-7"	
b 111 (E)	5	#5	12'-10"	
b 112 (E)	6	#5	13'-11"	
b 113 (E)	27	#6	4'-6"	
c 100 (E)	12	#5	8'-1"	
c 101 (E)	13	#5	8'-5"	
t 101 (E)	80	#4	10'-0"	
t 102 (E)	52	#4	9'-8"	
w102 (E)	40	#5	20'-2"	
w103 (E)	40	#5	28'-5"	
w104 (E)	40	#5	21'-7"	
Concrete Structures		Cu. Yd.	19.8	
Concrete Superstructure		Cu. Yd.	80.6	
Reinforcement Bars, Epoxy Coated		Pound	23,350	

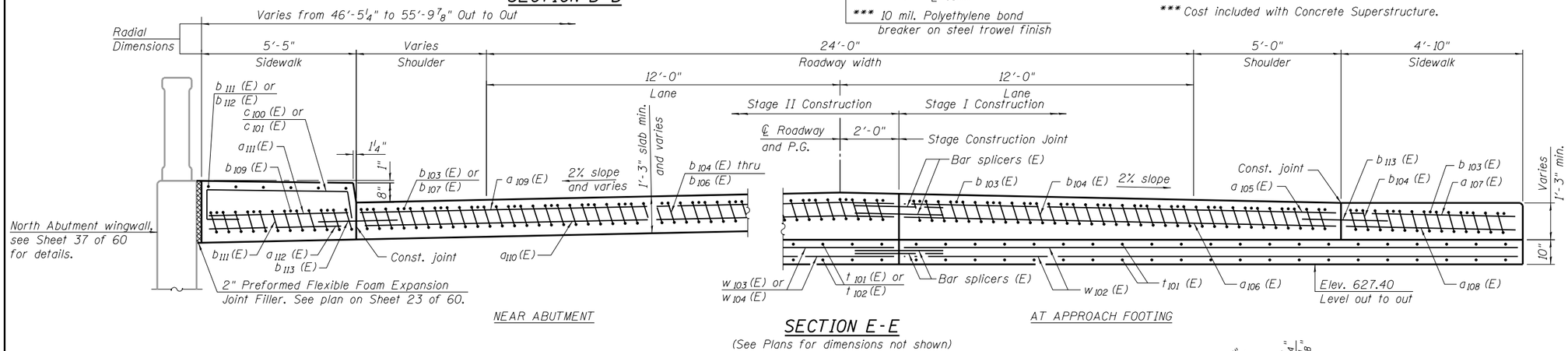

NEAR ABUTMENT

SECTION E-E

(See Plans for dimensions not shown)

AT APPROACH FOOTING

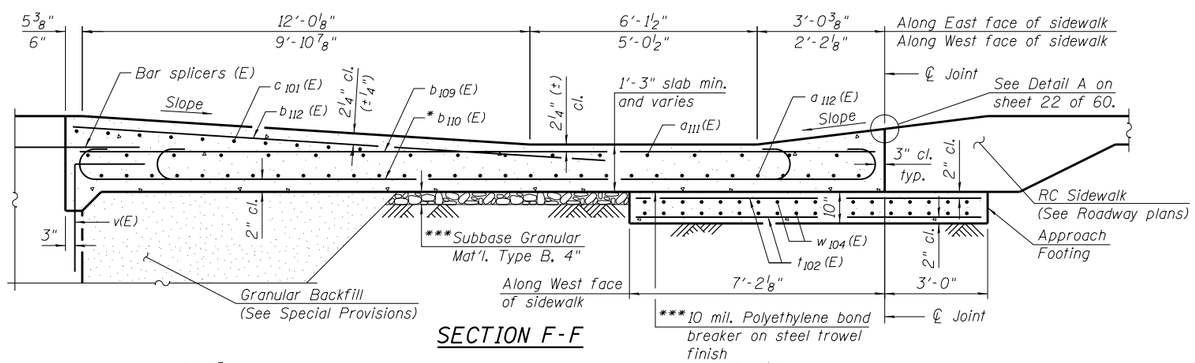

SECTION F-F

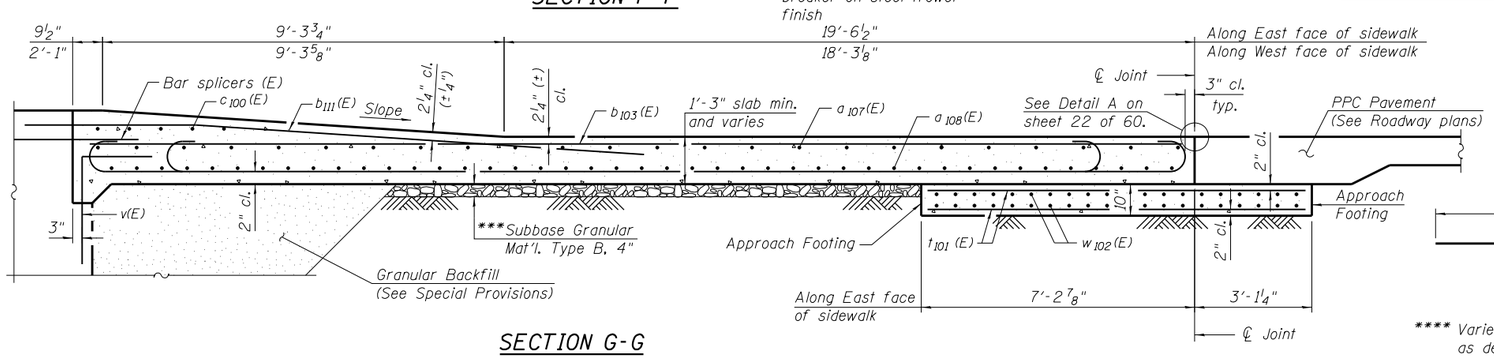

SECTION G-G

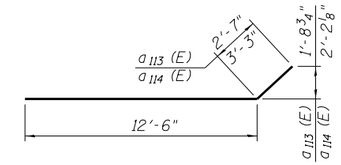

BARS a 113 (E) and a 114 (E)

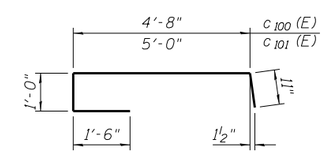

BARS c 100 (E) and c 101 (E)

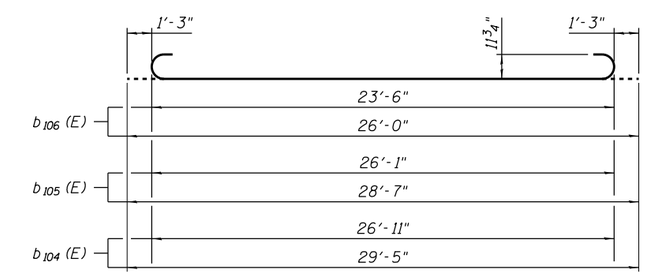

BARS b 104 (E), b 105 (E), and b 106 (E)

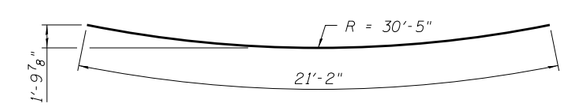

BAR b 109 (E)

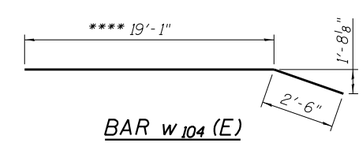

BAR w 104 (E)

**** Varies from 16'-11" to 19'-1". Order as detailed and cut to fit in field.

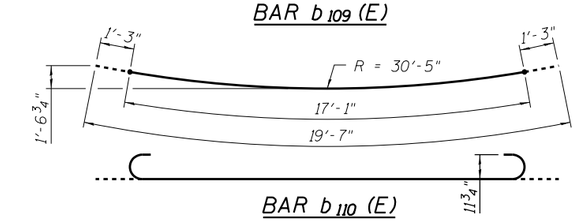

BAR b 110 (E)

design firm no. 184001036 whks engineers • planners • land surveyors	USER NAME = dheberling	DESIGNED - BRD	REVISED	STATE OF ILLINOIS DEPARTMENT OF TRANSPORTATION
	FILE NAME = 8430028-64E08.dgn	CHECKED - SBC	REVISED	
	PLOT SCALE = 0:2.00000 ':' / in.	DRAWN - DLH	REVISED	
	PLOT DATE = 8/5/2013	CHECKED - SBC	REVISED	

NORTH BRIDGE APPROACH SLAB DETAILS
STRUCTURE NO. 043-0080
SHEET NO. 24 OF 60 SHEETS

F.A.P. RTE.	SECTION	COUNTY	TOTAL SHEETS	SHEET NO.
308	103BR-4	JoDAVIESS	159	74
		CONTRACT NO. 64E08		
	ILLINOIS	FED. AID PROJECT		