Notes:

See sheet 11 of 21 for Detail A and View B-B.
Approach slab and parapet concrete shall be paid for as Concrete Superstructure.
Approach footing concrete shall be paid for as Concrete Structures.
Reinforcement shall be paid for as Reinforcement Bars, Epoxy Coated.
For $v_1(E)$ bar details, see sheet 14 of 21.
The approach footing maximum applied service bearing pressure (Qmax) = 2.0 ksf.
For bar splicer details, see sheet 19 of 21.
Cost of excavation for approach footing included with Concrete Structures.
For Granular Backfill for Structures and drainage treatment details, see sheet 2 of 21.
For additional parapet details, see sheet 9 of 21.

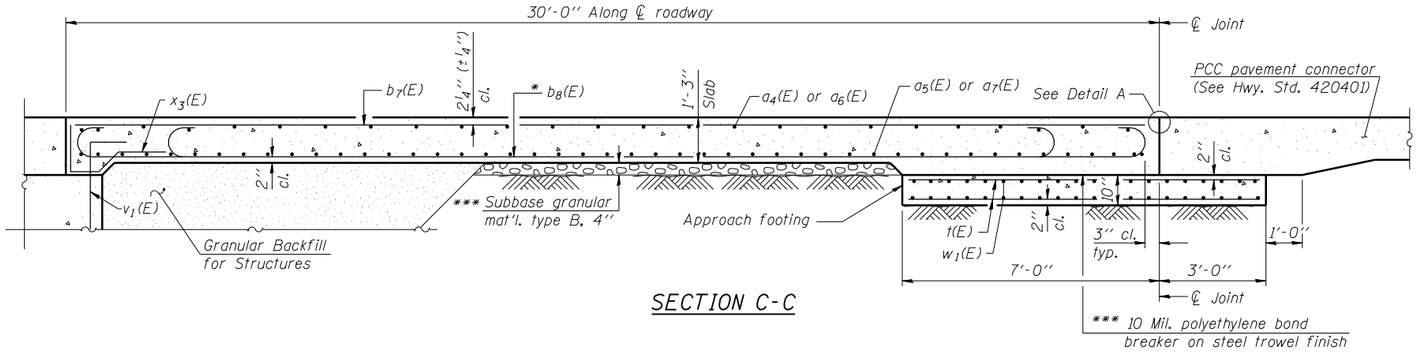

SECTION C-C

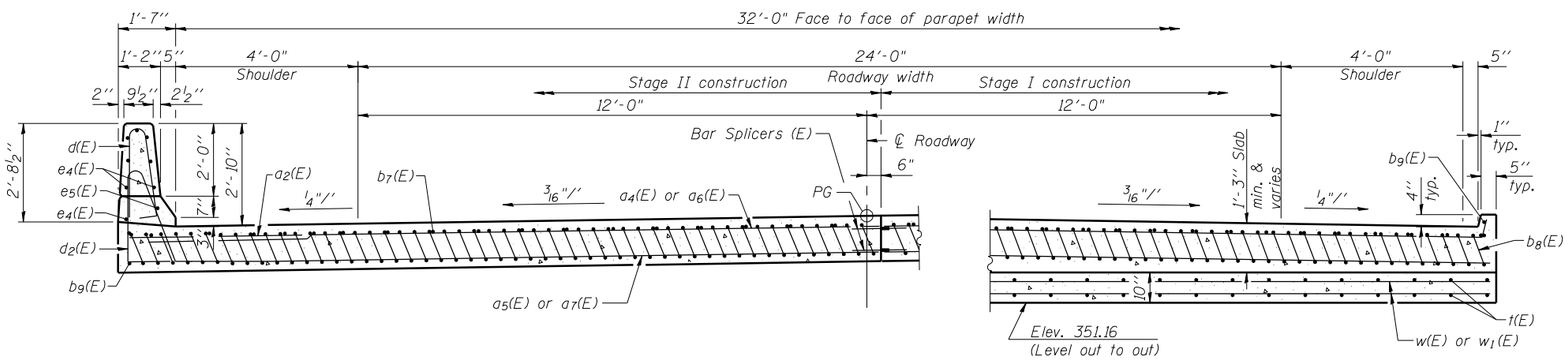

NEAR ABUTMENT

SECTION D-D

(See Plan for dimensions not shown)

AT APPROACH FOOTING

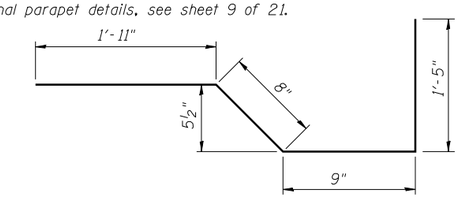

BAR $x_3(E)$

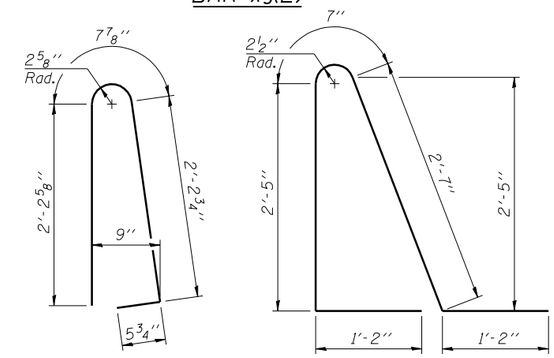

BAR d(E)

BAR $d_2(E)$

* Tilt #9 $b_8(E)$ bars as required to maintain clearance.

*** Cost included with Concrete Superstructure.

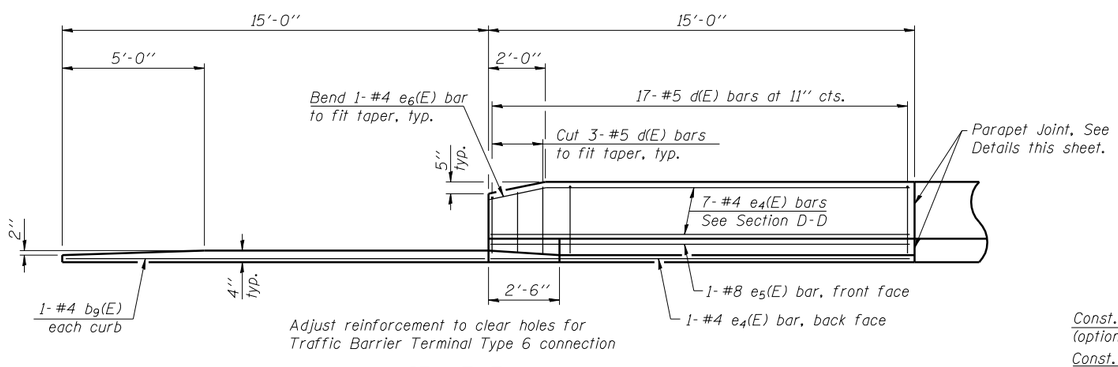

VIEW E-E

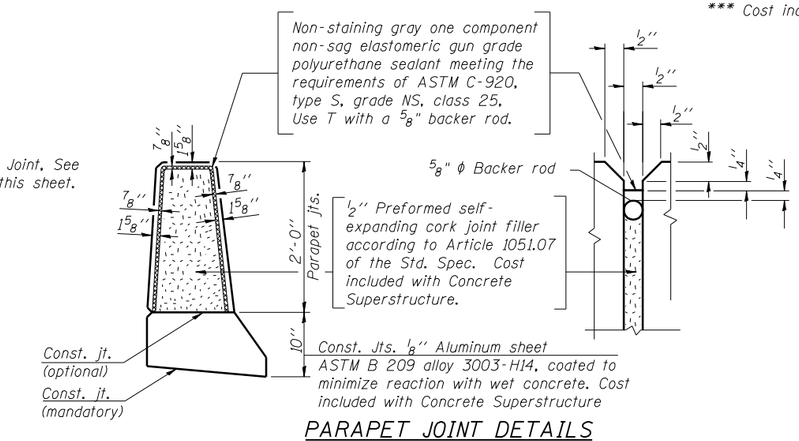

PARAPET JOINT DETAILS

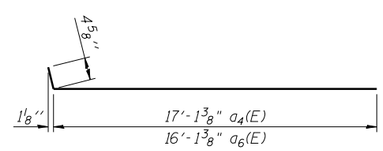

BARS $a_4(E)$ & $a_6(E)$

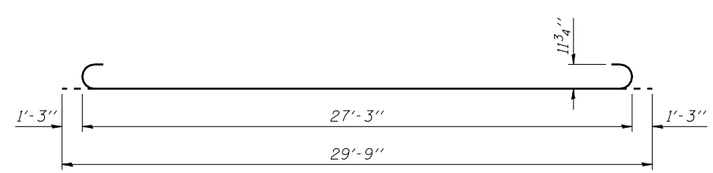

BAR $b_8(E)$

TWO APPROACHES BILL OF MATERIAL

Bar	No.	Size	Length	Shape
$a_2(E)$	48	#6	6'-6"	
$a_4(E)$	50	#4	17'-6"	
$a_5(E)$	92	#5	17'-2"	
$a_6(E)$	50	#4	16'-6"	
$a_7(E)$	92	#5	16'-2"	
$b_7(E)$	54	#4	29'-8"	
$b_8(E)$	162	#9	29'-9"	
$b_9(E)$	8	#4	14'-8"	
d(E)	68	#5	5'-7"	
$d_2(E)$	68	#5	7'-11"	
$e_4(E)$	32	#4	14'-8"	
$e_5(E)$	4	#8	14'-8"	
t(E)	140	#4	9'-8"	
w(E)	80	#5	17'-2"	
$w_1(E)$	80	#5	16'-2"	
$x_3(E)$	74	#5	4'-9"	
Concrete Superstructure			Cu. Yd.	109.3
Concrete Structures			Cu. Yd.	20.9
Reinforcement Bars, Epoxy Coated			Pound	27820
Bar Splicers			Each	222

(Sheet 2 of 2)