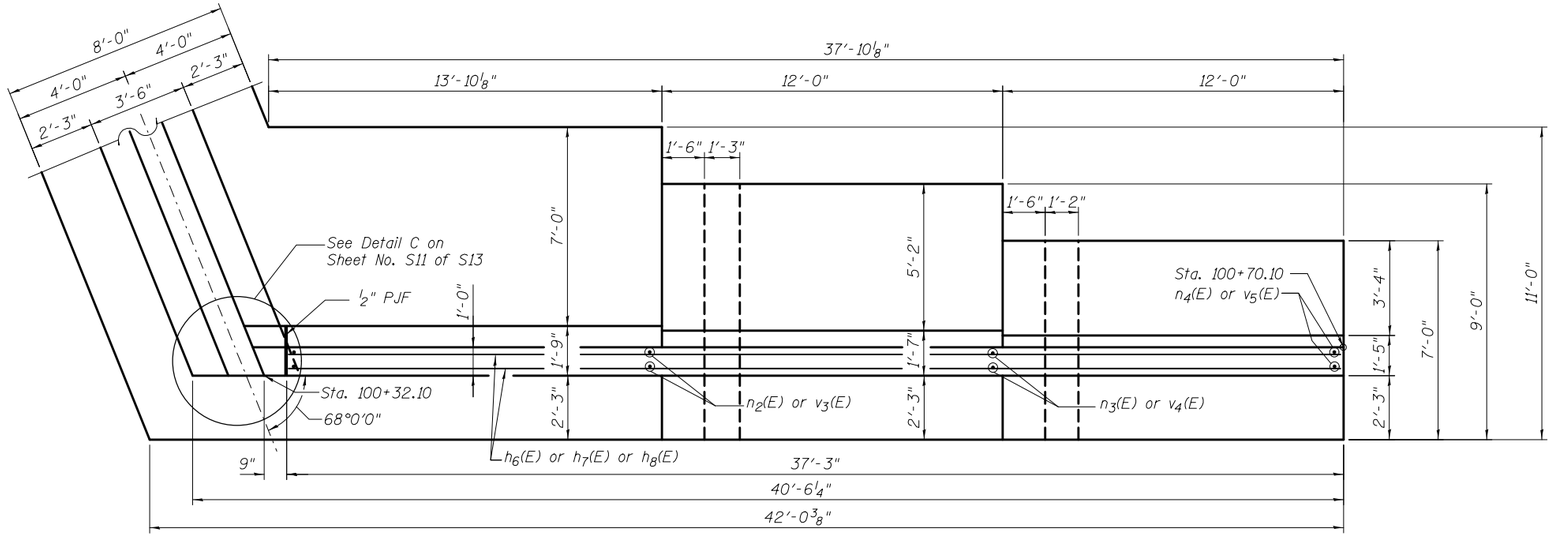

NE WINGWALL PLAN

Note: See Foundation Plan on Sheet No. S8 of S13 for reinforcement not shown.

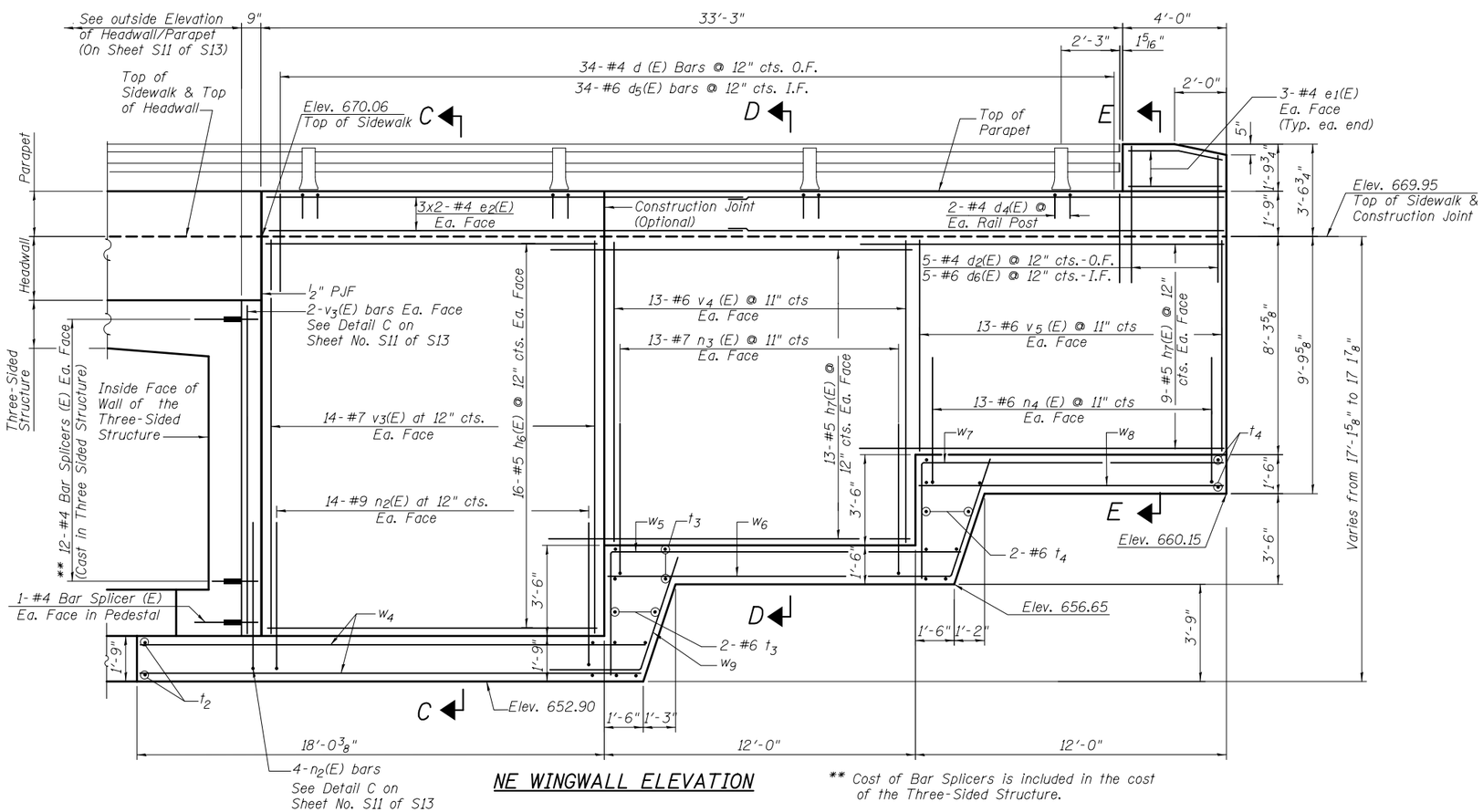

NE WINGWALL ELEVATION

** Cost of Bar Splicers is included in the cost of the Three-Sided Structure.

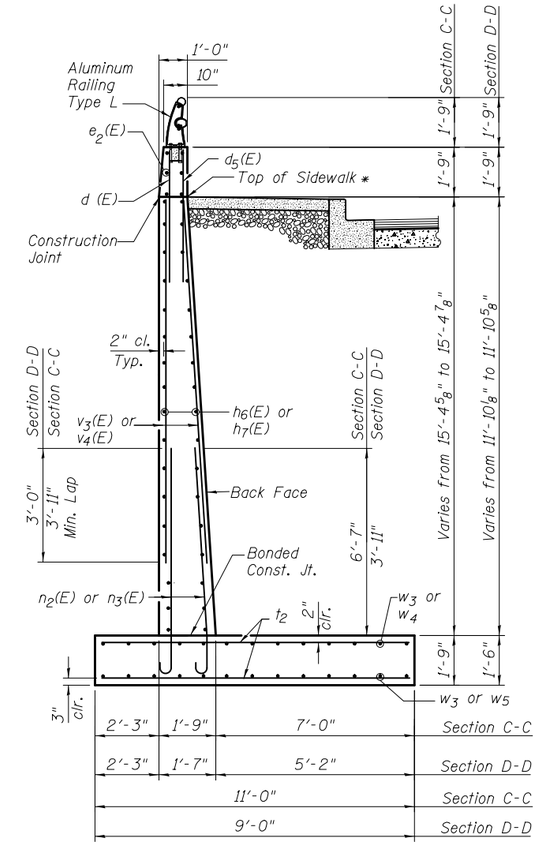

SECTION C-C/D-D

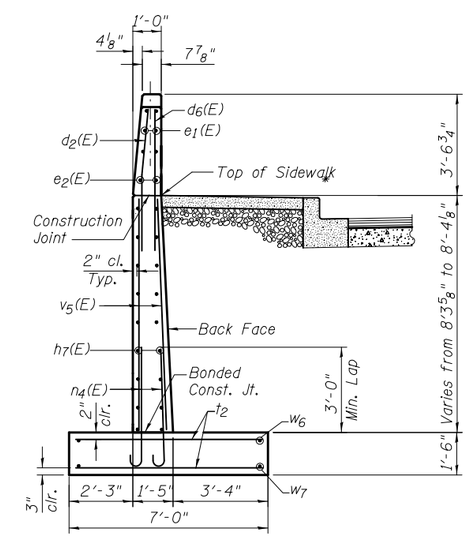

* Elev. varies from 669.95 to 670.06

SECTION E-E

Primera 100 S. WACKER DRIVE SUITE 700 . CHICAGO IL 60606 . P:312-408-0910 F:313-408-2615	USER NAME =	DESIGNED - JPM	REVISED -
		CHECKED - JXH	REVISED -
	PLOT SCALE =	DRAWN - MPS	REVISED -
	PLOT DATE =	CHECKED - JPM/JXH/TPG	REVISED -

STATE OF ILLINOIS
DEPARTMENT OF TRANSPORTATION

WINGWALL PLAN AND DETAILS 2
STRUCTURE NO. 022-3054 STA. 100+00.15
SHEET NO. S10 OF S13 SHEETS

F.A.P. RTE.	SECTION	COUNTY	TOTAL SHEETS	SHEET NO.
870	534R-B	DUPAGE	53	39
		CONTRACT NO. 60M83		

DATE: AUGUST 03, 2012 | ILLINOIS | FED. AID PROJECT