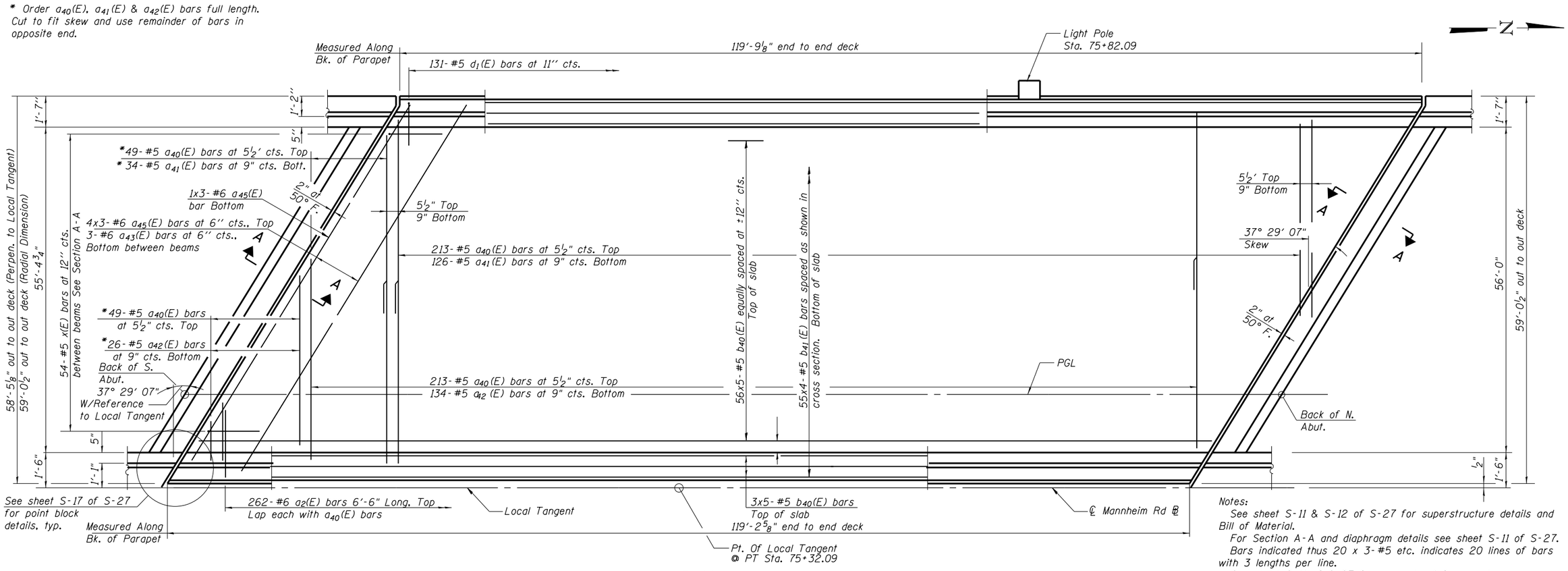

PLAN

Notes:

See sheet S-11 & S-12 of S-27 for superstructure details and Bill of Material.

For Section A-A and diaphragm details see sheet S-11 of S-27.

Bars indicated thus 20 x 3-#5 etc. indicates 20 lines of bars with 3 lengths per line.

See sheet S-11 of S-27 for parapet reinforcement.

Dimensions are based on a Rolled Rail Strip Seal Joint. If the Contractor elects to use the Welded Rail Strip Seal Joint, deck dimensions may require adjustments to satisfy the detail on S-17.

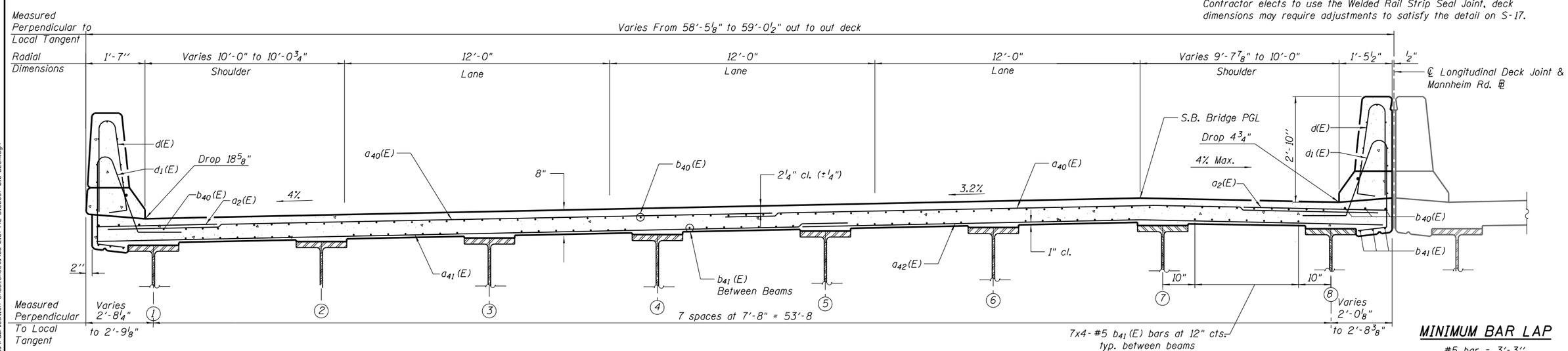

CROSS SECTION

(Looking North)

MINIMUM BAR LAP

#5 bar = 3'-3''
#6 bar = 3'-10''

THIS SHEET IS FOR INFORMATION ONLY

N:\ROSEMONT\11009\CADD_Sheets\Fabrication CADD_Sheets\38-016794z-D160037-010-DECK.dgn

CHRISTOPHER B. BURKE ENGINEERING, LTD. 8575 W. Higgins Road, Suite 600 Rosemont, Illinois 60018 (847) 823-0500	USER NAME =	DESIGNED - MM	REVISED	STATE OF ILLINOIS DEPARTMENT OF TRANSPORTATION	SUPERSTRUCTURE PLAN AND CROSS SECTION SB MANNHEIM ROAD BRIDGE – STRUCTURE NO. 016–7942	F.A. RTE. 330	SECTION 0105-F
		CHECKED - JMB	REVISED			COUNTY COOK	TOTAL SHEETS 55
	PLOT SCALE =	DRAWN - PDR	REVISED			SHEET NO. 38	CONTRACT NO. 60V68
	PLOT DATE =	CHECKED - MM	REVISED		SHEET NO. S-10 OF S-27 SHEETS	ILLINOIS FED. AID PROJECT	