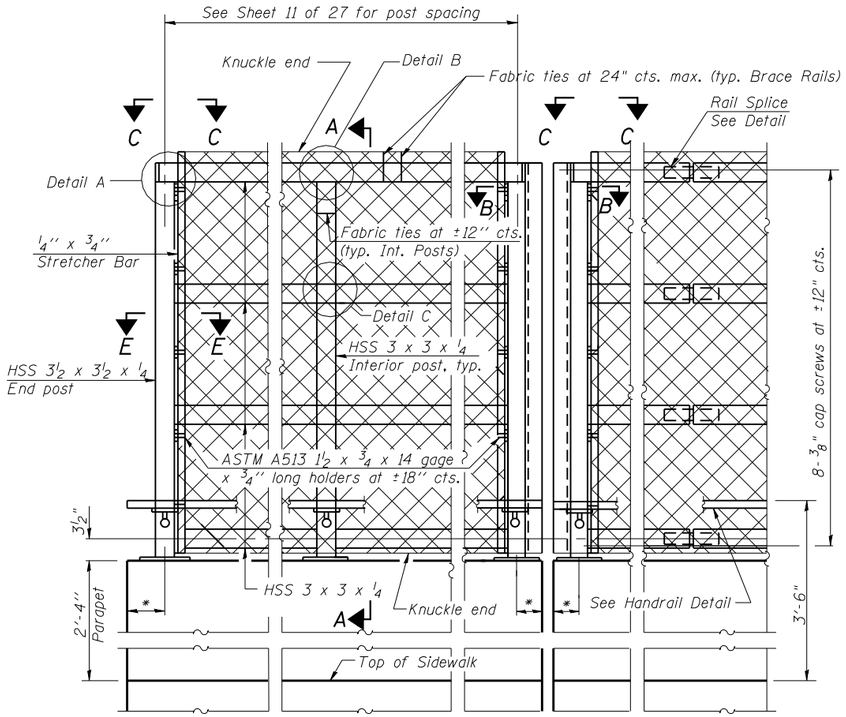

ELEVATION
(Inside Face)

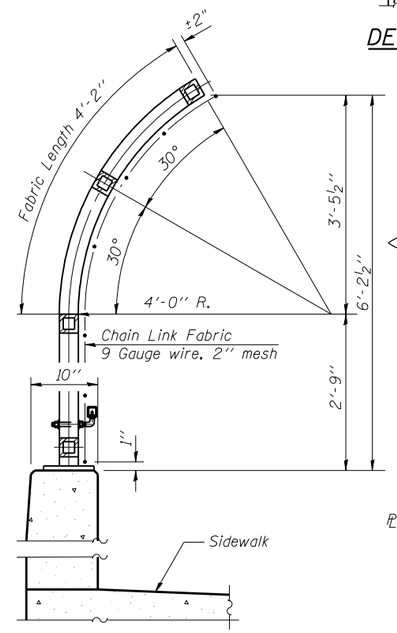

SECTION A-A

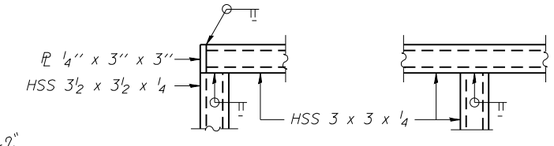

DETAIL A

DETAIL B

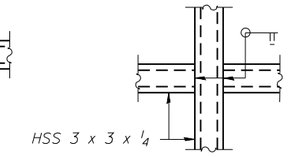

DETAIL C

All steel rail elements shall be galvanized according to Article 509.05 of the Standard Specifications. All of these elements, except the chain link fabric and ties, shall also be powder coated. At a minimum, the powder coating process shall consist of a zinc phosphate pretreatment/wash, a gray zinc rich primer coat and a black top coat.

The galvanized chain link fabric and ties shall be vinyl coated black according to Section 509 and Article 1006.27(a)(1)d of the Standard Specifications.

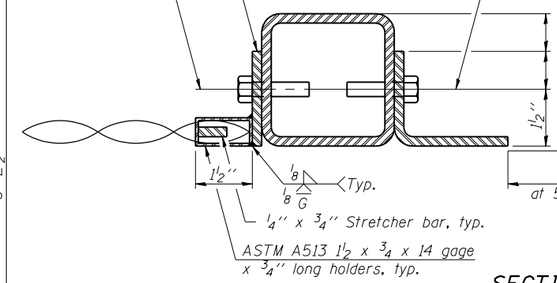

SECTION B-B
(At Expansion Joint)

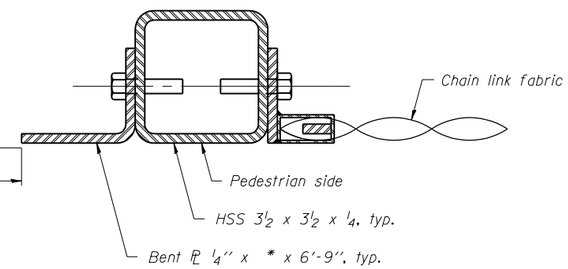

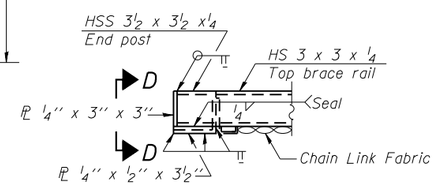

VIEW C-C

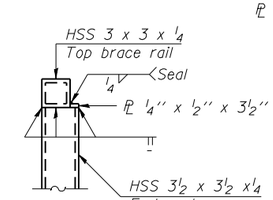

VIEW D-D

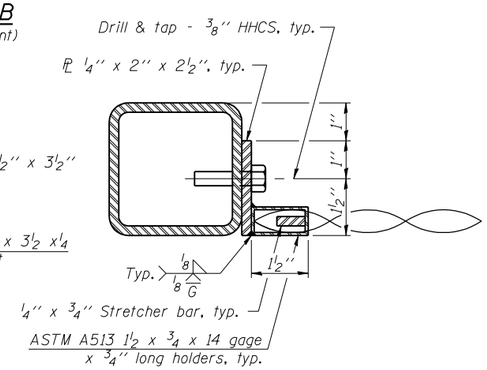

SECTION E-E

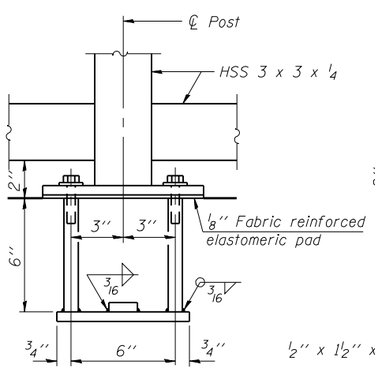

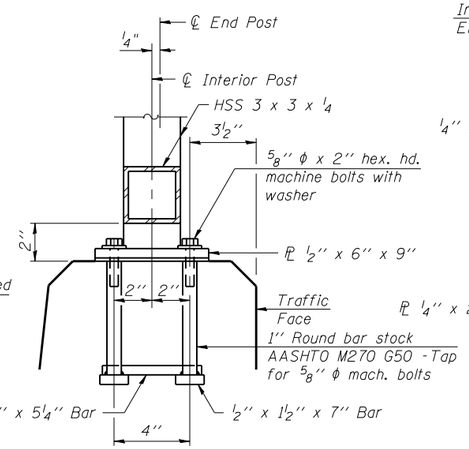

ANCHOR BOLT DETAILS

In lieu of the cast-in-place anchor device shown, the Contractor has the option of drilling and setting 5/8" ϕ anchor rods according to Article 509.06 of the Standard Specifications. Embedment shall be according to the manufacturer's specifications.

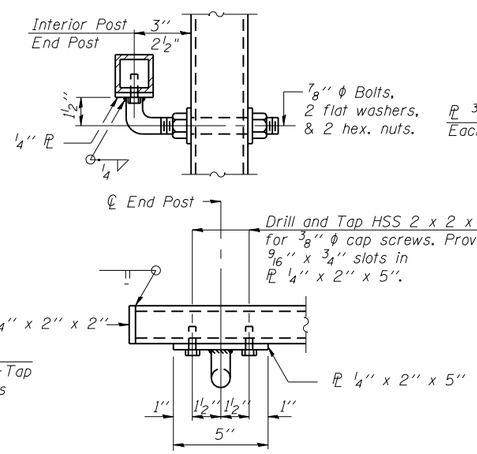

HANDRAIL DETAIL

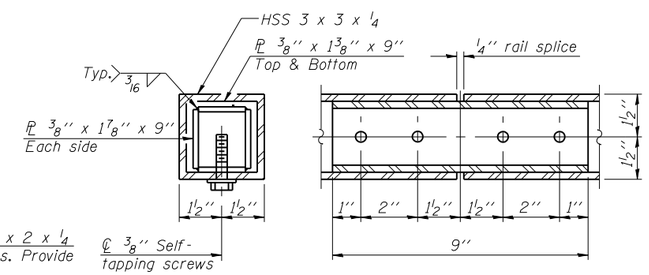

RAIL SPLICE

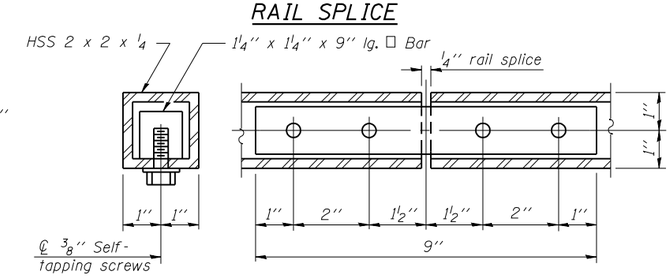

HANDRAIL SPLICE

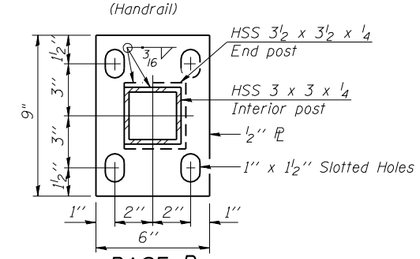

BASE PL

BASE PL
(Handrail)

*Variable - See Plans
(10'-0" Maximum Post Spacing)

BILL OF MATERIAL

Item	Unit	Quantity
Bridge Fence Railing	Foot	430

R-32 7-1-10

FILE NAME = ...\0100291-70109-016-fence-railing-02.dgn
CB PROJECT NO 04078-7

Coombe-Bloxdorf P.C.
-CIVIL ENGINEERS-
-STRUCTURAL ENGINEERS-
-LAND SURVEYORS-
Design Firm License No. 184-002703

USER NAME = MML	DESIGNED - GJB	REVISED -	
	CHECKED - RKM	REVISED -	
PLOT SCALE = 0:2.000000 ':' / IN.	DRAWN - CFC	REVISED -	
PLOT DATE = 8/10/2012	CHECKED - RKM/MCB	REVISED -	

STATE OF ILLINOIS
DEPARTMENT OF TRANSPORTATION

BRIDGE FENCE RAILING, PARAPET MOUNTED
STRUCTURE NO. 010-0291

SHEET NO. 16 OF 27 SHEETS

F.A.I. RTE.	SECTION	COUNTY	TOTAL SHEETS	SHEET NO.
57	(10-32HB-2)BY	CHAMPAIGN	81	54
		CONTRACT NO. 70109		
		ILLINOIS FED. AID PROJECT		