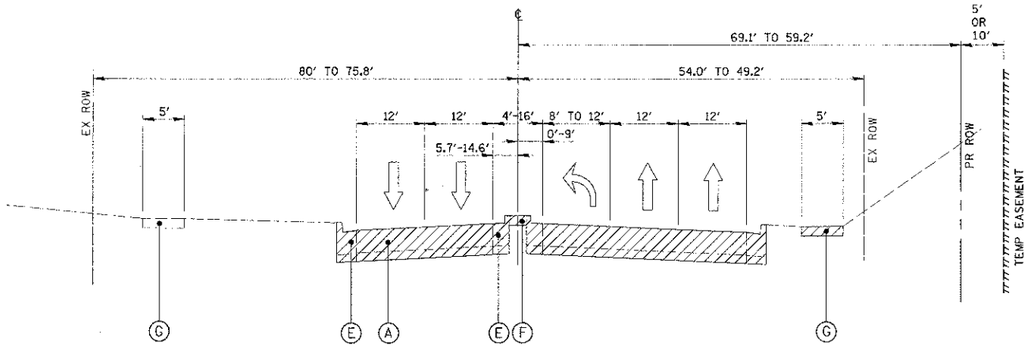

EXISTING TYPICAL SECTION–ILLINOIS ROUTE 58 (GOLF ROAD)
STA. 106 + 00.00 TO STA. 114 + 00.00

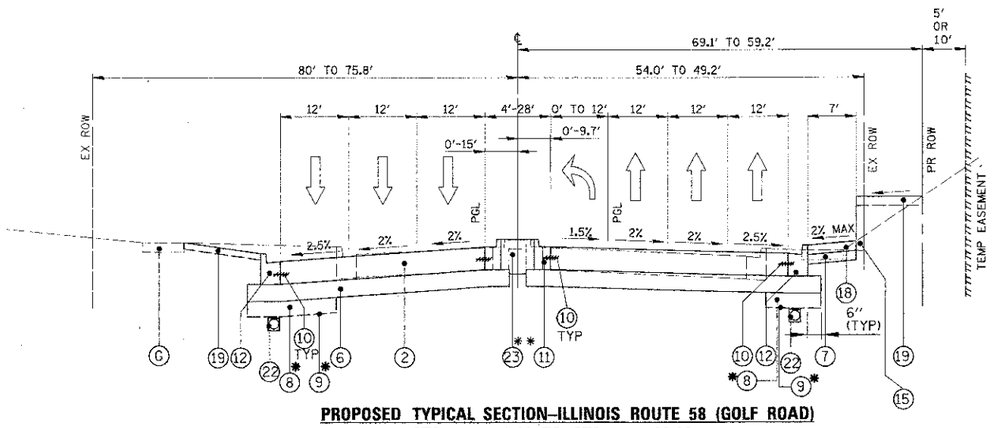

PROPOSED TYPICAL SECTION–ILLINOIS ROUTE 58 (GOLF ROAD)
STA. 106 + 00.00 TO STA. 114 + 00.00

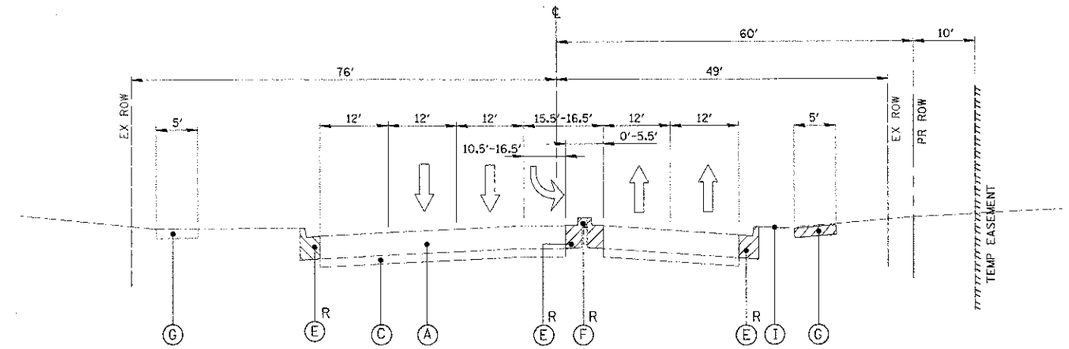

EXISTING TYPICAL SECTION–ILLINOIS ROUTE 58 (GOLF ROAD)
STA. 114 + 00.00 TO STA. 117 + 58.00

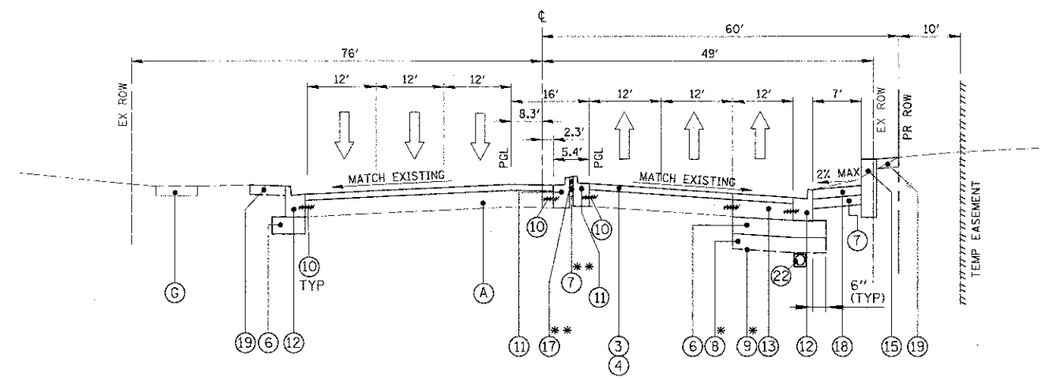

PROPOSED TYPICAL SECTION–ILLINOIS ROUTE 58 (GOLF ROAD)
STA. 114 + 00.00 TO STA. 115 + 80.20

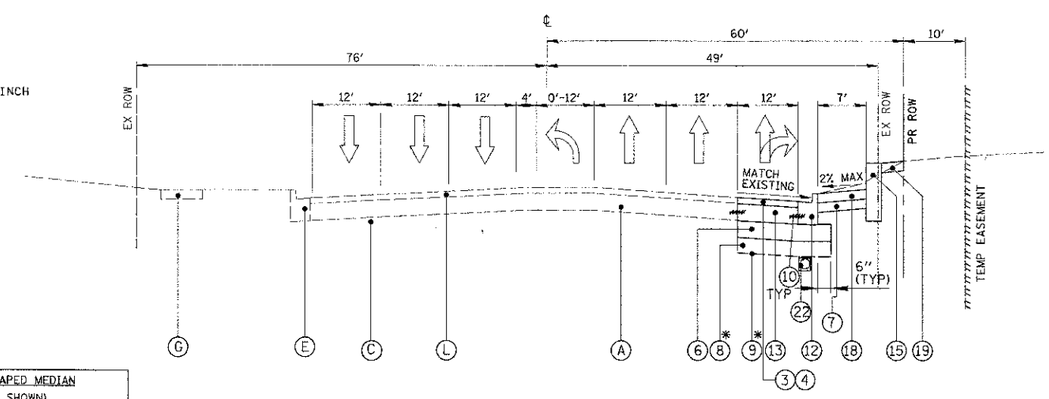

PROPOSED TYPICAL SECTION–ILLINOIS ROUTE 58 (GOLF ROAD)
STA. 115 + 80.20 TO STA. 117 + 08.00

EXISTING LEGEND

- (A) EXISTING CONCRETE PAVEMENT
- (B) EXISTING HOT-MIX ASPHALT SURFACE
- (C) EXISTING HOT-MIX ASPHALT SUBBASE
- (D) EXISTING POZZOLANIC STABILIZED SUBBASE
- (E) EXISTING CONCRETE CURB AND GUTTER
- (F) EXISTING CONCRETE MEDIAN SURFACE
- (G) EXISTING CONCRETE SIDEWALK
- (H) EXISTING HOT-MIX ASPHALT BIKE PATH
- (I) EXISTING GROUND LINE
- (J) TOPSOIL STRIPPING; 4" APPROX. (UNSUITABLE MATERIAL) SEE LANDSCAPING PLANS FOR LIMITS
- (K) EXISTING BRIDGE PIER
- (L) EXISTING HMA OVERLAY: 2.5" NOM.
- (M) EXISTING STEEL PLATE BEAM GUARDRAIL
- , R = REMOVAL

NOTE:
TYPICAL EXISTING PAVEMENT THICKNESS -
GOLF ROAD
15" (11" PCC ON 4" HMA)

NEW WILKE ROAD
10" (3" HMA ON 7" POZZOLANIC STABILIZED SUBBASE)

PROPOSED LEGEND

1. PORTLAND CEMENT CONCRETE PAVEMENT 9" (JOINTED)
2. PORTLAND CEMENT CONCRETE PAVEMENT 10" (JOINTED)
3. POLYMERIZED HOT-MIX ASPHALT SURFACE COURSE, MIX "F", N90; 1-3/4"
4. LEVELING BINDER (MACHINE METHOD), N70; 3/4" AND VARIES
5. HOT-MIX ASPHALT SURFACE COURSE, MIX "D", N50; 3"
6. AGGREGATE SUBGRADE IMPROVEMENT 12"
7. AGGREGATE BASE COURSE, TYPE B; 2"
8. AGGREGATE SUBGRADE IMPROVEMENT (PAID IN CU YD)*
9. GEOTECHNICAL FABRIC FOR GROUND STABILIZATION*
10. EPOXY COATED TIE BARS AND DOWELS (INCLUDED IN COST OF ASSOCIATED CONCRETE PAY ITEM, SEE DETAILS AND STANDARDS FOR SIZE, LENGTH, LOCATION AND SPACING)
11. COMBINATION CONCRETE CURB AND GUTTER, TYPE B-6.12
12. COMBINATION CONCRETE CURB AND GUTTER, TYPE B-6.24
13. PORTLAND CEMENT CONCRETE BASE COURSE WIDENING 10"
14. CHAIN LINK FENCE
15. RETAINING WALL (SPECIAL)
16. BITUMINOUS STABILIZATION AT GUARDRAIL
17. CONCRETE MEDIAN SURFACE, 4 INCH
18. PORTLAND CEMENT CONCRETE SIDEWALK 5 INCH
19. EROSION CONTROL BLANKET
    SEEDING, CLASS 2A
    FERTILIZER NUTRIENTS
    TOPSOIL FURNISH AND PLACE, 4"
20. AGGREGATE BASE COURSE, TYPE B: 6"
21. STEEL PLATE BEAM GUARDRAIL, TYPE A
22. PIPE UNDERDRAINS, 4"
23. EROSION CONTROL BLANKET
    SEEDING, CLASS 2A
    FERTILIZER NUTRIENTS
    TOPSOIL FURNISH AND PLACE, 24"

⇨ TRAFFIC FLOW

*SEE SHEET 8

**MEDIAN INSTALLATION LIMITS:

CONCRETE MEDIAN (INSTALL AS (17) OVER (7))			LANDSCAPED MEDIAN (AS SHOWN)		
STA. 83+13.5	TO	STA. 83+33.5	STA. 83+33.5	TO	STA. 88+77.9
STA. 88+77.9	TO	STA. 88+97.9	STA. 91+34.0	TO	STA. 94+80.0
STA. 91+00.0	TO	STA. 91+34.0	STA. 106+37.9	TO	STA. 109+87.7
STA. 94+80.0	TO	STA. 98+99.8			
STA. 100+99.5	TO	STA. 105+50.5			
STA. 106+16.3	TO	STA. 106+37.9			
STA. 109+87.7	TO	STA. 112+26.6			
STA. 113+77.4	TO	STA. 115+64.0			

FILE NAME =	USER NAME = mvonderar	DESIGNED - BLL	REVISED -
		DRAWN - PMM	REVISED -
	PLOT SCALE = 20'	CHECKED - JGS	REVISED -
	PLOT DATE = 8/30/2012	DATE - 8/06/12	REVISED -

STATE OF ILLINOIS
DEPARTMENT OF TRANSPORTATION

IL RTE 58 (GOLF ROAD) AND NEW WILKE ROAD IMPROVEMENTS
TYPICAL SECTIONS
IL RTE 58 (GOLF ROAD)

SCALE: N.T.S. | SHEET NO. 3 OF 4 SHEETS | STA. | TO STA.

F.A.P RTE.	SECTION	COUNTY	TOTAL SHEETS	SHEET NO.
0559	00-00078-00-CH	COOK	116	10

CONTRACT NO. 83735

FED. ROAD DIST. NO. | ILLINOIS | FED. AID PROJECT