11-09-2018 LETTING ITEM 032

032

F.A.P RTE.	SECTION	COUNTY	TOTAL SHEETS	SHEET NO.
002	(101,102)R-5	MADISON	28	1
	ILLINOIS	CONTRACT NO. 76L41		

STATE OF ILLINOIS
DEPARTMENT OF TRANSPORTATION

INDEX OF SHEETS

SEE SHEET NO. 2

PROPOSED HIGHWAY PLANS

FAP ROUTE 002 (IL 3)
SECTION (101,102)R-5
PROJECT NHPP-VPCQ(318)
IL ROUTE 3 - PAVEMENT REMOVAL & REPLACEMENT
MADISON COUNTY

C-98-222-18

D-98-052-18

LOCATION OF SECTION INDICATED THUS:-

TRAFFIC DATA:

IL 3 NORTH OF PONTOON RD.
2017 ADT=12000 (ACT)
2037 ADT=13800 (EST)
SU=8.8%, MU=13.8%

IL 3 SOUTH OF PONTOON RD.
2017 ADT=15000 (ACT)
2037 ADT=17200 (EST)
SU=6.2%, MU=12.3%

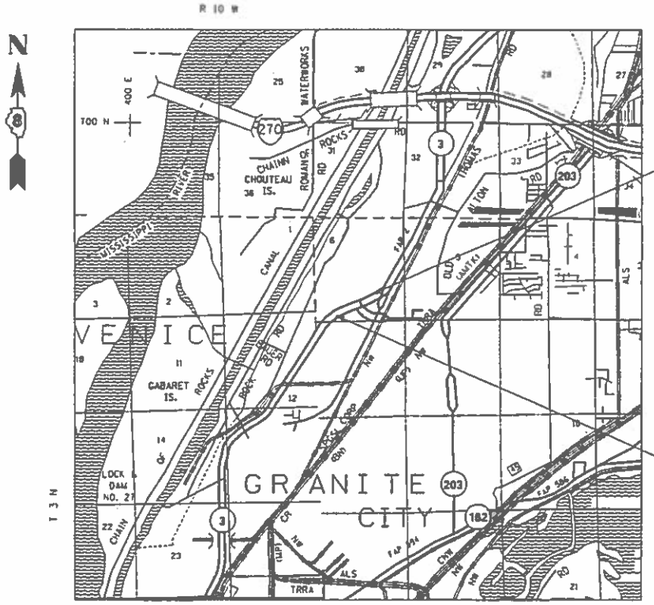

0 1 2 3 — 1"= 1 MILE

LIST OF TOWNSHIPS
GRANITE CITY

FULL SIZE PLANS HAVE BEEN PREPARED USING STANDARD ENGINEERING SCALES. REDUCED SIZED PLANS WILL NOT CONFORM TO STANDARD SCALES. IN MAKING MEASUREMENTS ON REDUCED PLANS, THE ABOVE SCALES MAY BE USED.

J.U.L.I.E.
JOINT UTILITY LOCATION INFORMATION FOR EXCAVATION
1-800-892-0123
OR 811

PROJECT ENGINEER TIM PADGETT 618-346-3325
PROJECT MANAGER JEFF SCHWEIZER 618-346-3208

CONTRACT NO. 76L41

GROSS LENGTH = 1500 FT. = 0.284 MILE
NET LENGTH = 1500 FT. = 0.284 MILE

DESIGN DESIGNATION
15,000(19) OTHER ARTERIAL 13.81 (PCC-20)

STATE OF ILLINOIS
DEPARTMENT OF TRANSPORTATION

SUBMITTED Aug 16 20 18
Jeffrey Z. Kenner
REGIONAL ENGINEER

Oct 5 20 18
E.A. Eck
ENGINEER OF DESIGN AND ENVIRONMENT

Oct 5 20 18
Paul P. Ruff
DIRECTOR OF HIGHWAYS PROJECT IMPLEMENTATION

PRINTED BY THE AUTHORITY OF THE STATE OF ILLINOIS

INDEX OF SHEETS

1	COVER SHEET
2	INDEX OF SHEETS, HIGHWAY STANDARDS, GENERAL NOTES, & COMMITMENTS
3-4	SUMMARY OF QUANTITIES
5-8	TYPICAL SECTIONS
9	SCHEDULE OF QUANTITIES
10-11	ALIGNMENT, TIES, AND BENCHMARKS
12	PLAN SHEET
13	REMOVAL SHEET
14-15	TRAFFIC CONROL
16	DETOUR ROUTE
17	INTERSECTION DETAIL
18	PAVEMENT MARKING
19-20	TRAFFIC SIGNAL DETAILS
21-28	CROSS SECTIONS

STANDARDS

000001-06	ABBREVIATIONS, SYMBOLS AND PATTERNS
001001-02	REINFORCEMENT BARS, AREAS, WEIGHTS AND SPACING
001006	DECIMAL OF AN INCH AND OF A FOOT
420101-06	24' (7.2 M) JOINTED PCC PAVEMENT
420106-06	36' (10.8 M) JOINTED PCC PAVEMENT
482006-03	HMA SHOULDER ADJACENT TO RIGID PAVEMENT
701422-10	LANE CLOSURE, MULTILANE, FOR SPEEDS > 45 MPH TO 55 MPH
701426-09	LANE CLOSURE, MULTILANE, INTERMITTENT OR MOVING OPER., > 45 MPH
701428-01	TRAFFIC CONTROL SETUP AND REMOVAL FREEWAY / EXPRESSWAY
701701-10	URBAN LANE CLOSURE, MULTILANE INTERSECTION
701901-07	TRAFFIC CONTROL DEVICES
780001-05	TYPICAL PAVEMENT MARKINGS
781001-04	TYPICAL APPLICATION RAISED REFLECTIVE PAVEMENT MARKERS
814001-03	HANDHOLES
886001-01	DETECTOR LOOP INSTALLATIONS
886006-01	TYPICAL LAYOUT FOR DETECTION LOOPS
BLR 21-9	TYPICAL APPLICATION OF TRAFFIC CONTROL DEVICES FOR CONSTRUCTION ON RURAL LOCAL HIGHWAYS

COMMITMENTS

NONE

GENERAL NOTES

1. THE CONTRACTOR SHALL VERIFY ALL DIMENSIONS AND CONDITIONS IN THE FIELD PRIOR TO CONSTRUCTION AND ORDERING MATERIALS.

2. THE PROPOSED PAVEMENT MARKING SHALL MATCH THE LOCATIONS OF THE EXISTING PAVEMENT MARKING, AS DIRECTED BY THE ENGINEER.

3. ILLINOIS STATE LAW REQUIRES A 48-HOUR NOTICE BE GIVEN TO ALL UTILITIES BEFORE DIGGING. FIELD MARKING OF FACILITIES MAY BE OBTAINED BY CONTACTING J.U.L.I.E. OR FOR NON-MEMBERS, THE UTILITY COMPANY DIRECTLY. AGENCIES KNOWN TO HAVE FACILITIES WITHIN THE PROJECT AREA ARE AS FOLLOWS:

UTILITY
*AMEREN ILLINOIS
*AT&T ILLINOIS
*CITY OF GRANITE CITY
*ILLINOIS AMERICAN WATER COMPANY
*LEVEL 3 COMMUNICATIONS, LLC
*MADISON COUNTY SPECIAL SERVICE AREA #1

MEMBERS OF J.U.L.I.E. CALL TOLL FREE (800) 892-0123 OR 811 AND ARE INDICATED BY *. NON-J.U.L.I.E. MEMBERS MUST BE NOTIFIED INDIVIDUALLY.

4. THE DEPARTMENT STRONGLY ENCOURAGES THE PRIME CONTRACTOR AND THEIR APPROVED SUB-CONTRACTORS TO HIRE MINORITY, WOMEN AND DISADVANTAGED INDIVIDUALS FROM ITS FEDERALLY FUNDED HIGHWAY CONSTRUCTION CAREERS TRAINING PROGRAM (HCCTP) TO HELP MEET WORK FORCE AND TRAINEE GOALS. THIS PROGRAM IS TRAINING MINORITIES, WOMEN AND DISADVANTAGED INDIVIDUALS IN HIGHWAY CONSTRUCTION-RELATED SKILLS, E.G., MATH FOR THE TRADES, JOB READINESS, TECHNICAL SKILLS COURSE WORK (CARPENTRY, CONCRETE FLATWORK, BLUEPRINT READING, SITE PLANS, SITE WORK, TOOLS USE, ETC.) AND OSHA 10 HOUR CERTIFICATION, TO PREPARE THEM FOR A CAREER IN THE HIGHWAY CONSTRUCTION TRADES. GRADUATES ARE WELL-TRAINED AND READY TO BECOME PRODUCTIVE ENTRY-LEVEL CONSTRUCTION WORKERS. CONTACT THE DISTRICT 8 EEO OFFICE AT 618-346-3360 AND/OR THE HCCTP COORDINATOR AT 618-874-6528 TO LEARN MORE ABOUT THE PROGRAM AND FOR ASSISTANCE IN MEETING WORK FORCE AND TRAINEE GOALS.

5. ALL EXISTING PIPE UNDERDRAINS THAT ARE ENCOUNTERED DURING PAVEMENT REMOVAL (SPECIAL) SHALL BE REMOVED. PIPE UNDERDRAIN REMOVAL WILL BE INCLUDED IN PAVEMENT REMOVAL (SPECIAL).

6. HIGH EARLY STRENGTH CONCRETE MIX SHALL BE ALLOWED FOR CONSTRUCTION ON THIS PROJECT AS NEEDED.

ROUTE	FAP 2 (IL 3)
SECTION	(101,102)R-5
COUNTY	MADISON
CONTRACT	76L41

ADT (CONSTR. YEAR)	15000
MU %	12.3
SU %	6.2
20 YR ESAL'S	10.98

MIX DESIGN TABLE

MIXTURE USE	SHOULDERS ≥ 2.25"	SHOULDERS < 2.25"	SURFACE
AC/PG	PG 64-22	PG 64 - 22	PG 64 - 22
RAP % (MAX)	SEE SPECIAL PROVISION	SEE SPECIAL PROVISION	SEE SPECIAL PROVISION
DESIGN AIR VOIDS	4.0% @ Ndes=30	4.0% @ Ndes=30	4.0% @ Ndes=70
MIX COMPOSITION (GRADATION)	IL 19.0 L	IL 9.5 L	IL 9.5
FRICTION AGG			MIXUTRE "D"
QUALITY MGMT PROGRAM	QC / QA	QC / QA	QC / QA

PLAN QUANTITIES FOR BITUMINOUS CONCRETE SURFACE COURSE ITEMS ARE CALCULATED USING A UNIT WEIGHT OF 112 LB/SQ YD/IN

CODE NO.	ITEM	UNIT	TOTAL QUANTITY	URBAN 80% FED 20% STATE CONSTR. CODE MADISON ROADWAY 0004 URBAN
20101400	NITROGEN FERTILIZER NUTRIENT	POUND	90	90
20101500	PHOSPHORUS FERTILIZER NUTRIENT	POUND	90	90
20101600	POTASSIUM FERTILIZER NUTRIENT	POUND	90	90
25000200	SEEDING, CLASS 2	ACRE	1	1
31101900	SUBBASE GRANULAR MATERIAL, TYPE C	TON	165	165
31200100	STABILIZED SUBBASE 4"	SQ YD	11352	11352
35101100	AGGREGATE BASE COURSE, TYPE A 12"	SQ YD	11352	11352
40600290	BITUMINOUS MATERIALS (TACK COAT)	POUND	3895	3895
40603340	HOT-MIX ASPHALT SURFACE COURSE, MIX "D", N70	TON	44	44
42000511	PORTLAND CEMENT CONCRETE PAVEMENT 10 1/2" (JOINTED)	SQ YD	11352	11352
42001300	PROTECTIVE COAT	SQ YD	11352	11352
44000155	HOT-MIX ASPHALT SURFACE REMOVAL, 1 1/2"	SQ YD	3380	3380
44000159	HOT-MIX ASPHALT SURFACE REMOVAL, 2 1/2"	SQ YD	311	311
44004250	PAVED SHOULDER REMOVAL	SQ YD	692	692

CODE NO.	ITEM	UNIT	TOTAL QUANTITY	URBAN 80% FED 20% STATE CONSTR. CODE MADISON ROADWAY 0004 URBAN
48102100	AGGREGATE WEDGE SHOULDER, TYPE B	TON	136	136
48203029	HOT-MIX ASPHALT SHOULDERS, 8"	SQ YD	741	741
48203100	HOT-MIX ASPHALT SHOULDERS	TON	284	284
67000400	ENGINEER'S FIELD OFFICE, TYPE A	CAL MO	2	2
67100100	MOBILIZATION	L SUM	1	1
70100320	TRAFFIC CONTROL AND PROTECTION, STANDARD 701422	L SUM	1	1
70102635	TRAFFIC CONTROL AND PROTECTION, STANDARD 701701	L SUM	1	1
70107005	PAVEMENT MARKING BLACKOUT TAPE, 5"	FOOT	190	190
70200100	NIGHTTIME WORK ZONE LIGHTING	L SUM	1	1
70300520	PAVEMENT MARKING TAPE, TYPE III 4"	FOOT	750	750
* 78008200	POLYUREA PAVEMENT MARKING TYPE I - LETTERS AND SYMBOLS	SQ FT	140	140
* 78008210	POLYUREA PAVEMENT MARKING TYPE I - LINE 4"	FOOT	7271	7271
* 78008270	POLYUREA PAVEMENT MARKING TYPE I - LINE 24"	FOOT	78	78
* 78100100	RAISED REFLECTIVE PAVEMENT MARKER	EACH	63	63

* SPECIALTY ITEM

MODEL: Default
FILE NAME: pw:\\IL084EBIDINTEG.illinois.gov:PWIDOT\Documents\IDOT Offices\District 8\Projects\D876L41\CADData\CADsheets\D876L41-sht-SOQ.dgn

USER NAME = schweizerja	DESIGNED - JS	REVISED -	
	DRAWN - JS	REVISED -	
PLOT SCALE = 100.0000 ' / in.	CHECKED - DM	REVISED -	
PLOT DATE = 8/10/2018	DATE -	REVISED -	

STATE OF ILLINOIS
DEPARTMENT OF TRANSPORTATION

SUMMARY OF QUANTITIES

SCALE: SHEET 1 OF 2 SHEETS STA. TO STA.

F.A.P. RTE.	SECTION	COUNTY	TOTAL SHEETS	SHEET NO.
2	(101,102)R-5	MADISON	28	3
		CONTRACT NO. 76L41		
		ILLINOIS FED. AID PROJECT NHPP-VPCQ(318)		

REV. - MS

URBAN
80% FED
20% STATE

	CODE NO.	ITEM	UNIT	TOTAL QUANTITY	CONSTR. CODE MADISON ROADWAY 0004 URBAN
*	80300100	LOCATING UNDERGROUND CABLE	FOOT	70	70
*	88600600	DETECTOR LOOP REPLACEMENT	FOOT	2088	2088
	89502378	REBUILD EXISTING HANDHOLE TO HEAVY-DUTY HANDHOLE	EACH	1	1
	X4404400	PAVEMENT REMOVAL (SPECIAL)	SQ YD	11352	11352
	X6015000	REMOVE CONCRETE HEADWALLS FOR PIPE DRAINS	EACH	6	6
	X7010216	TRAFFIC CONTROL AND PROTECTION, (SPECIAL)	L SUM	1	1
	X7010222	TRAFFIC CONTROL AND PROTECTION, STANDARD BLR 21 (SPECIAL)	L SUM	1	1
	X7015005	CHANGEABLE MESSAGE SIGN	CAL DA	154	154
	X7030005	TEMPORARY PAVEMENT MARKING REMOVAL	SQ FT	250	250
	Z0013798	CONSTRUCTION LAYOUT	L SUM	1	1
	Z0016702	DETOUR SIGNING	L SUM	1	1
	Z0028415	GEOTECHNICAL REINFORCEMENT	SQ YD	11352	11352

* SPECIALTY ITEM

IL 3 EXISTING TYPICAL SECTIONS AT PONTOON RD.

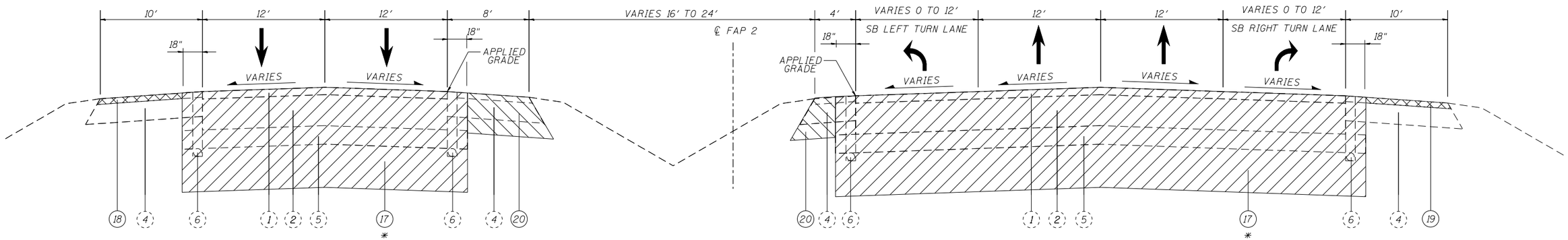

EXISTING IL 3

STA. 1494+65.55 TO STA. 1495+00.00

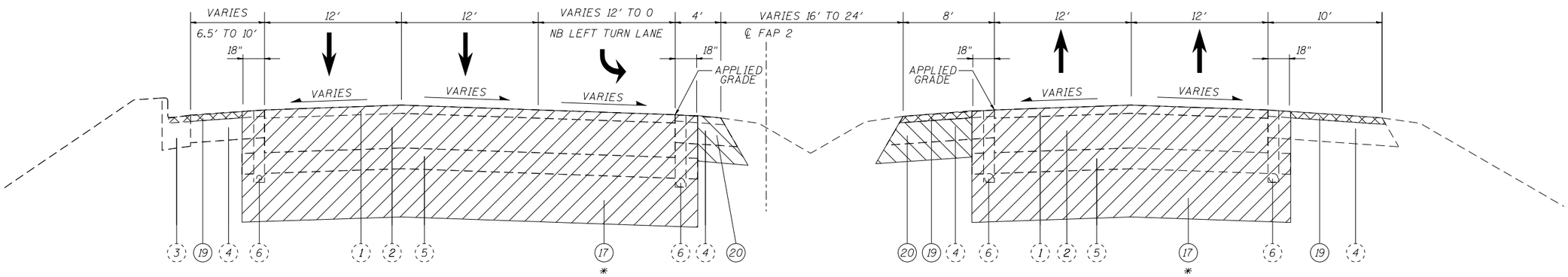

EXISTING IL 3

STA. 1495+97.74 TO STA. 1498+82.24

NOTES

* THE 13" DEEP AREA THAT IS BELOW THE EXISTING 4" STABILIZED SUBBASE IS TO BE EXCAVATED AND WILL BE INCLUDED UNDER PAVEMENT REMOVAL (SPECIAL). SEE SPECIAL PROVISION.

* * SHOULDER CONSTRUCTION LIMITS VARY FROM AS SHOWN ON TYPICALS FOR EXACT LIMITS AND QUANTITIES SEE SHEET 9 & 13. DEPTH OF EXISTING HMA SHOULDERS VARIES FROM 7-10.5" WITH A 4" GRANULAR SUBBASE.

LEGEND

1. EXISTING RESURFACING, 2½"
2. EXISTING CONTIN. REINFORCED PCC PAVEMENT, 7"
3. EXISTING CONCRETE CURB & GUTTER, TYPE B-6.24
4. EXISTING HMA SHOULDERS, VARIES
5. EXISTING STABILIZED SUBBASE, 4"
6. EXISTING UNDERDRAIN
7. PROPOSED PCC PAVEMENT 10 ½" (JOINTED)
8. PROPOSED STABILIZED SUBBASE 4"
9. PROPOSED AGGREGATE BASE COURSE, TYPE A 12"
10. PROPOSED HMA SURFACE MIX "D", N70 2 ½"
11. * * PROPOSED HMA SHOULDER 8"
12. * * PROPOSED HMA SHOULDER 1 ½"
13. PROPOSED AGG. WEDGE SHOULDER, TY. B (AS NEEDED)
14. PROPOSED PROTECTIVE COAT
15. PROPOSED BITUMINOUS MATERIALS (TACK COAT)
16. PROPOSED GEOTECHNICAL REINFORCEMENT ----
17. * PAVEMENT REMOVAL (SPECIAL)
18. PROPOSED HMA SURFACE REMOVAL 2.5"
19. PROPOSED HMA SURFACE REMOVAL 1.5"
20. PROPOSED PAVED SHOULDER REMOVAL
21. PROPOSED SUBBASE GRANULAR MATERIAL, TYPE C, 4"

MODEL: Default
FILE NAME: pw:\\IL084EBI03NTEG.illinois.gov:PWIDOT\Documents\IDOT Offices\District 8\Projects\D876L41\CADData\CADsheets\D876L41-sh-typical.dgn

USER NAME = schweizerja	DESIGNED - JS	REVISED -	STATE OF ILLINOIS DEPARTMENT OF TRANSPORTATION
	DRAWN - JS	REVISED -	
PLOT SCALE = 100.0000 ' / in.	CHECKED - DM	REVISED -	
PLOT DATE = 8/10/2018	DATE -	REVISED -	

EXISTING TYPICAL SECTIONS

SCALE: | SHEET 1 OF 4 SHEETS | STA. TO STA.

F.A.P. RTE.	SECTION	COUNTY	TOTAL SHEETS	SHEET NO.
2	(101,102) R-5	MADISON	28	5
		CONTRACT NO. 76L41		
	ILLINOIS	FED. AID PROJECT NHPP-VPCO(318)		

IL 3 EXISTING TYPICAL SECTIONS AT PONTOON RD.

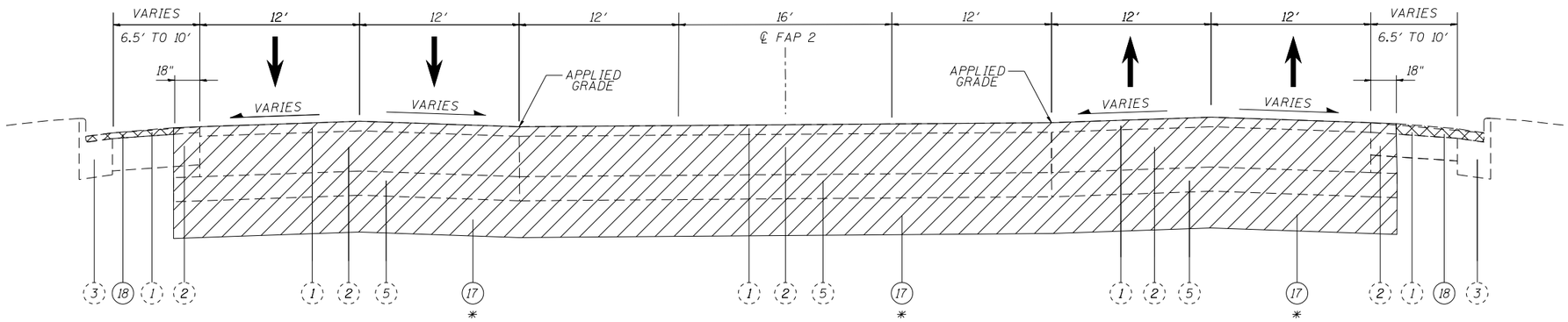

EXISTING IL 3

STA. 1495+00.00 TO STA. 1495+97.74

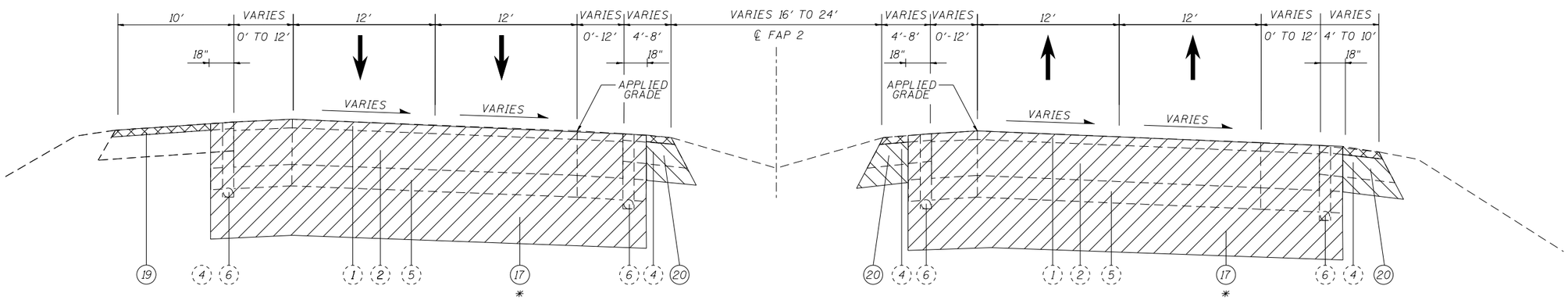

EXISTING SUPERELEVATION IL 3

STA. 1488+01.30 TO STA. 1494+65.55
STA 1498+82.24 STA. 1503+01.30

NOTES

* THE 13" DEEP AREA THAT IS BELOW THE EXISTING 4" STABILIZED SUBBASE IS TO BE EXCAVATED AND WILL BE INCLUDED UNDER PAVEMENT REMOVAL (SPECIAL). SEE SPECIAL PROVISION.

* * SHOULDER CONSTRUCTION LIMITS VARY FROM AS SHOWN ON TYPICALS FOR EXACT LIMITS AND QUANTITIES SEE SHEET 9 & 13. DEPTH OF EXISTING HMA SHOULDERS VARIES FROM 7-10.5" WITH A 4" GRANULAR SUBBASE.

LEGEND

1. EXISTING RESURFACING, 2½"
2. EXISTING CONTIN. REINFORCED PCC PAVEMENT, 7"
3. EXISTING CONCRETE CURB & GUTTER, TYPE B-6.24
4. EXISTING HMA SHOULDERS, VARIES
5. EXISTING STABILIZED SUBBASE, 4"
6. EXISTING UNDERDRAIN
7. PROPOSED PCC PAVEMENT 10 ½" (JOINTED)
8. PROPOSED STABILIZED SUBBASE 4"
9. PROPOSED AGGREGATE BASE COURSE, TYPE A 12"
10. PROPOSED HMA SURFACE MIX "D", N70 2 ½"
11. * * PROPOSED HMA SHOULDER 8"
12. * * PROPOSED HMA SHOULDER 1 ½"
13. PROPOSED AGG. WEDGE SHOULDER, TY. B (AS NEEDED)
14. PROPOSED PROTECTIVE COAT
15. PROPOSED BITUMINOUS MATERIALS (TACK COAT)
16. PROPOSED GEOTECHNICAL REINFORCEMENT ----
17. * PAVEMENT REMOVAL (SPECIAL)
18. PROPOSED HMA SURFACE REMOVAL 2.5"
19. PROPOSED HMA SURFACE REMOVAL 1.5"
20. PROPOSED PAVED SHOULDER REMOVAL
21. PROPOSED SUBBASE GRANULAR MATERIAL, TYPE C, 4"

MODEL: Default
FILE NAME: pw:\\IL084EBI03NTEG.illinois.gov:PWIDOT\Documents\IDOT Offices\District 8\Projects\D76L41\CADData\CADsheets\D76L41-sht-typical.dgn

USER NAME = schweizerja	DESIGNED - JS	REVISED -	
	DRAWN - JS	REVISED -	
PLOT SCALE = 100.0000 ' / in.	CHECKED - DM	REVISED -	
PLOT DATE = 8/10/2018	DATE -	REVISED -	

STATE OF ILLINOIS
DEPARTMENT OF TRANSPORTATION

EXISTING TYPICAL SECTIONS

SCALE: | SHEET 2 OF 4 SHEETS | STA. TO STA.

F.A.P. RTE.	SECTION	COUNTY	TOTAL SHEETS	SHEET NO.
2	(101,102) R-5	MADISON	28	6
		CONTRACT NO. 76L41		
	ILLINOIS	FED. AID PROJECT NHPP-VPCO(318)		

IL 3 PROPOSED TYPICAL SECTIONS AT PONTOON RD.

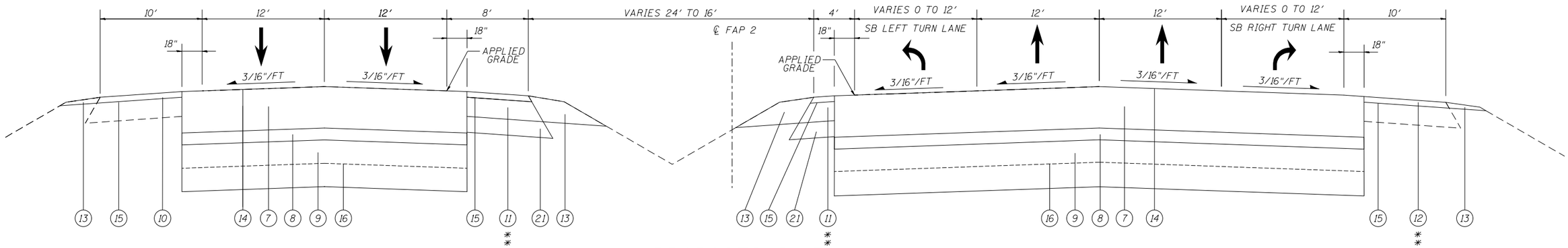

PROPOSED IL 3

STA. 1494+65.55 TO STA. 1495+00.00

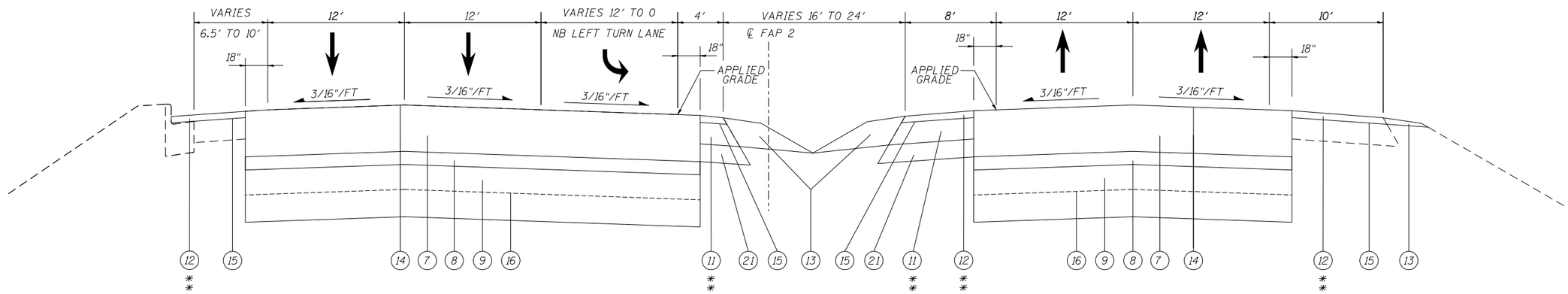

PROPOSED IL 3

STA. 1495+97.74 TO STA. 1498+82.24

PAVEMENT DESIGN

	ADT	YEAR
CURRENT	15,000	2017
FUTURE	17,200	2037

JOINTED PCC PAVEMENT	10.5"
STABILIZED SUBBASE	4"
AGG. BASE COURSE	12"

	MIN. ADT	ACTUAL ADT	ACTUAL % OF TOTAL ADT	% OF ADT IN DESIGN LANE
PV	0	13,211.15	0.815	32
SU	250	1,005.02	0.062	45
MU	750	1,993.83	0.123	45

CPV	0.15
CSU	143.81
CMU	696.42
TF RIG. ACT.	13.81
TF RID. MIN.	5.02

SSR	POOR
CONSTR. YEAR	2018
DESIGN PERIOD	20 YR.

NOTES

* THE 13" DEEP AREA THAT IS BELOW THE EXISTING 4" STABILIZED SUBBASE IS TO BE EXCAVATED AND WILL BE INCLUDED UNDER PAVEMENT REMOVAL (SPECIAL). SEE SPECIAL PROVISION.

* * SHOULDER CONSTRUCTION LIMITS VARY FROM AS SHOWN ON TYPICALS FOR EXACT LIMITS AND QUANTITIES SEE SHEET 9 & 13. DEPTH OF EXISTING HMA SHOULDERS VARIES FROM 7-10.5" WITH A 4" GRANULAR SUBBASE.

LEGEND

1. EXISTING RESURFACING, 2½"
2. EXISTING CONTIN. REINFORCED PCC PAVEMENT, 7"
3. EXISTING CONCRETE CURB & GUTTER, TYPE B-6.24
4. EXISTING HMA SHOULDERS, VARIES
5. EXISTING STABILIZED SUBBASE, 4"
6. EXISTING UNDERDRAIN
7. PROPOSED PCC PAVEMENT 10 ½" (JOINTED)
8. PROPOSED STABILIZED SUBBASE 4"
9. PROPOSED AGGREGATE BASE COURSE, TYPE A 12"
10. PROPOSED HMA SURFACE MIX "D", N70 2 ½"
11. * * PROPOSED HMA SHOULDER 8"
12. * * PROPOSED HMA SHOULDER 1 ½"
13. PROPOSED AGG. WEDGE SHOULDER, TY. B (AS NEEDED)
14. PROPOSED PROTECTIVE COAT
15. PROPOSED BITUMINOUS MATERIALS (TACK COAT)
16. PROPOSED GEOTECHNICAL REINFORCEMENT ----
17. * PAVEMENT REMOVAL (SPECIAL)
18. PROPOSED HMA SURFACE REMOVAL 2.5"
19. PROPOSED HMA SURFACE REMOVAL 1.5"
20. PROPOSED PAVED SHOULDER REMOVAL
21. PROPOSED SUBBASE GRANULAR MATERIAL, TYPE C, 4"

MODEL: Default
FILE NAME: pw:\\IL084EBI03NTEG.illinois.gov:PWIDOT\Documents\IDOT Offices\District 8\Projects\D76L41\CADData\CADsheets\D76L41-sh-typical.dgn

USER NAME = schweizerja	DESIGNED - JS	REVISED -	
	DRAWN - JS	REVISED -	
PLOT SCALE = 100.0000 ' / in.	CHECKED - DM	REVISED -	
PLOT DATE = 8/10/2018	DATE -	REVISED -	

STATE OF ILLINOIS
DEPARTMENT OF TRANSPORTATION

PROPOSED TYPICAL SECTIONS

SCALE: | SHEET 3 OF 4 SHEETS | STA. TO STA.

F.A.P. RTE.	SECTION	COUNTY	TOTAL SHEETS	SHEET NO.
2	(101,102) R-5	MADISON	28	7
		CONTRACT NO. 76L41		
	ILLINOIS	FED. AID PROJECT NHPP-VPCO(318)		

IL 3 PROPOSED TYPICAL SECTIONS AT PONTOON RD.

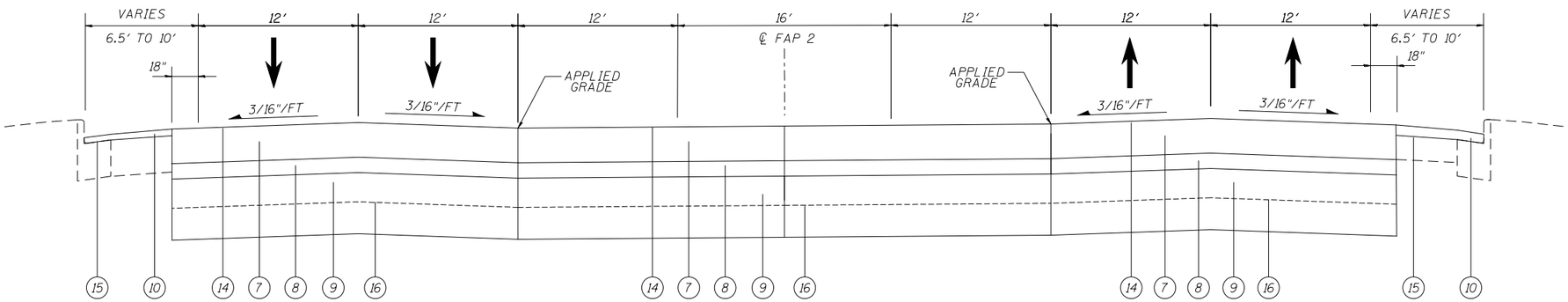

PROPOSED IL 3

STA. 1495+00.00 TO STA. 1495+97.74

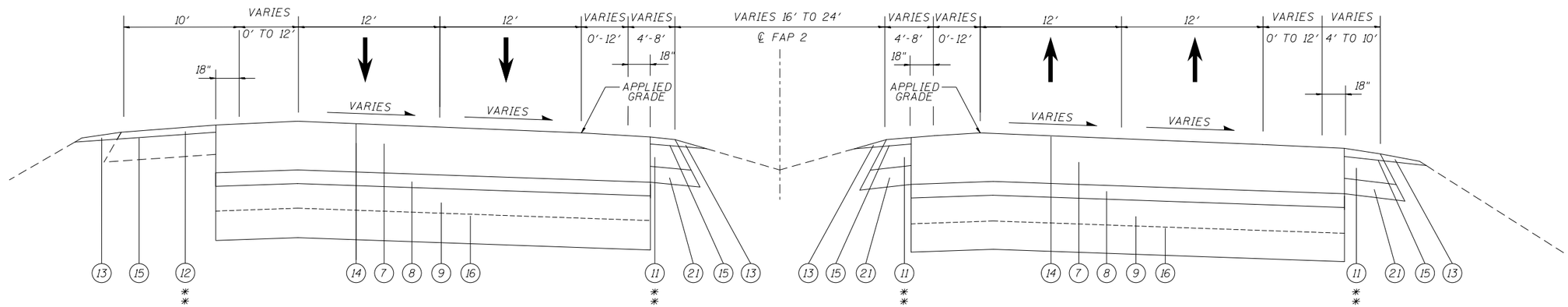

PROPOSED SUPERELEVATION IL 3

STA. 1488+01.30 TO STA. 1494+65.55
STA 1498+82.24 STA. 1503+01.30

PAVEMENT DESIGN

	ADT	YEAR
CURRENT	15,000	2017
FUTURE	17,200	2037

JOINTED PCC PAVEMENT	10.5"
STABILIZED SUBBASE	4"
AGG. BASE COURSE	12"

	MIN. ADT	ACTUAL ADT	ACTUAL % OF TOTAL ADT	% OF ADT IN DESIGN LANE
PV	0	13,211.15	0.815	32
SU	250	1,005.02	0.062	45
MU	750	1,993.83	0.123	45

CPV	0.15
CSU	143.81
CMU	696.42
TF RIG. ACT.	13.81
TF RID. MIN.	5.02

SSR	POOR
CONSTR. YEAR	2018
DESIGN PERIOD	20 YR.

NOTES

* THE 13" DEEP AREA THAT IS BELOW THE EXISTING 4" STABILIZED SUBBASE IS TO BE EXCAVATED AND WILL BE INCLUDED UNDER PAVEMENT REMOVAL (SPECIAL). SEE SPECIAL PROVISION.

* * SHOULDER CONSTRUCTION LIMITS VARY FROM AS SHOWN ON TYPICALS FOR EXACT LIMITS AND QUANTITIES SEE SHEET 9 & 13. DEPTH OF EXISTING HMA SHOULDERS VARIES FROM 7-10.5" WITH A 4" GRANULAR SUBBASE.

LEGEND

1. EXISTING RESURFACING, 2½"
2. EXISTING CONTIN. REINFORCED PCC PAVEMENT, 7"
3. EXISTING CONCRETE CURB & GUTTER, TYPE B-6.24
4. EXISTING HMA SHOULDERS, VARIES
5. EXISTING STABILIZED SUBBASE, 4"
6. EXISTING UNDERDRAIN
7. PROPOSED PCC PAVEMENT 10 ½" (JOINTED)
8. PROPOSED STABILIZED SUBBASE 4"
9. PROPOSED AGGREGATE BASE COURSE, TYPE A 12"
10. PROPOSED HMA SURFACE MIX "D", N70 2 ½"
11. * * PROPOSED HMA SHOULDER 8"
12. * * PROPOSED HMA SHOULDER 1 ½"
13. PROPOSED AGG. WEDGE SHOULDER, TY. B (AS NEEDED)
14. PROPOSED PROTECTIVE COAT
15. PROPOSED BITUMINOUS MATERIALS (TACK COAT)
16. PROPOSED GEOTECHNICAL REINFORCEMENT ----
17. * PAVEMENT REMOVAL (SPECIAL)
18. PROPOSED HMA SURFACE REMOVAL 2.5"
19. PROPOSED HMA SURFACE REMOVAL 1.5"
20. PROPOSED PAVED SHOULDER REMOVAL
21. PROPOSED SUBBASE GRANULAR MATERIAL, TYPE C, 4"

MODEL: Default
FILE NAME: pw:\\IL084EBI03NTEG.illinois.gov:PWIDOT\Documents\IDOT Offices\District 8\Projects\D76L41\CADData\CADsheets\D76L41-sh-typical.dgn

USER NAME = schweizerja	DESIGNED - JS	REVISED -	
	DRAWN - JS	REVISED -	
PLOT SCALE = 100.0000 ' / in.	CHECKED - DM	REVISED -	
PLOT DATE = 8/10/2018	DATE -	REVISED -	

STATE OF ILLINOIS
DEPARTMENT OF TRANSPORTATION

PROPOSED TYPICAL SECTIONS

SCALE: | SHEET 4 OF 4 SHEETS | STA. TO STA.

F.A.P. RTE.	SECTION	COUNTY	TOTAL SHEETS	SHEET NO.
2	(101,102) R-5	MADISON	28	8
		CONTRACT NO. 76L41		
		ILLINOIS	FED. AID PROJECT NHPP-VPCO(318)	

PAVEMENT SCHEDULE

LOCATION			LENGTH	PCC PAVEMENT 10 1/2" (JOINTED)	STABILIZED SUBBASE 4"	AGG. BASE COURSE, TYPE A 12"	PROTECTIVE COAT	GEOTECHNICAL REINFORCMENT	REMARKS
STA.	TO	STA.	(FT)	SQ YD.	SQ YD	SQ YD	SQ YD	SQ YD	
1488+01.30	TO	1503+01.30	1500.00	4384.62	4384.62	4384.62	4384.62	4384.62	NB MAINLINE
1488+01.30	TO	1503+01.30	1500.00	4278.89	4278.89	4278.89	4278.89	4278.89	SB MAINLINE
1494+49.55	TO	1496+57.82	208.27	552.70	552.70	552.70	552.70	552.70	INTERSECTION
1488+01.30	TO	1494+99.88	698.58	999.93	999.93	999.93	999.93	999.93	SB RIGHT TURN LANE
1490+05.33	TO	1494+86.54	481.21	494.67	494.67	494.67	494.67	494.67	SB LEFT TURN LANE
1496+08.93	TO	1501+74.29	565.36	640.63	640.63	640.63	640.63	640.63	NB LEFT TURN LANE
TOTALS				11352	11352	11352	11352	11352	

TRAFFIC CONTROL SCHEDULE

	TRAFFIC CONTROL AND PROTECTION STANDARD 701422	TRAFFIC CONTROL AND PROTECTION STANDARD 701701	TRAFFIC CONTROL AND PROTECTION, STANDARD B.L.R. 21 (SPECIAL)	TRAFFIC CONTROL AND PROTECTION (SPECIAL)
UNIT	L. SUM	L. SUM	L. SUM	L. SUM
QUANTITY	1	1	1	1
TOTAL	1.00	1.00	1.00	1.00

PAVEMENT REMOVAL AND SHOULDERS SCHEDULE

LOCATION			LENGTH	PAVEMENT REMOVAL (SPECIAL)	HOT-MIX ASPHALT SURF REM. 1.5"	HOT-MIX ASPHALT SURFACE REMOVAL 2.5"	PAVED SHOULDER REMOVAL	SUBBASE GRANULAR MATERIAL, TYPE C, 4"	AGGREGATE WEDGE SHOULDERS, TYPE B	HOT-MIX ASPHALT SHOULDERS, 1.5"	HOT-MIX ASPHALT SURFACE, MIX "D" 2.5"	HOT-MIX ASPHALT SHOULDERS, 8"	BITUMINOUS MATERIAL (TACK COAT)	REMOVE CONCRETE HEADWALLS FOR PIPE DRAINS	REMARKS
STA.	TO	STA.	(FT)	SQ YD	SQ YD	SQ YD	SQ YD	TON	TON	TON	TON	SQ YD	POUND	EACH	
1488+01.30	TO	1503+01.30	1500.00	4384.62										3.00	NB MAINLINE
1488+01.30	TO	1494+49.55	648.25		482.00				6.00	40.49			216.90		NB MEDIAN SHOULDER
1488+01.30	TO	1493+96.64	595.34		550.69				5.51	46.26			247.81		NB OUTSIDE SHOULDER
1493+96.64	TO	1495+70.99	174.35			169.14					23.68		114.17		NB INTERSECTION / SHOULDER
1495+70.99	TO	1501+25.62	554.63		528.31				5.14	44.38			237.74		NB OUTSIDE SHOULDER
1496+08.93	TO	1501+74.29	565.36	640.63			193.30	42.91	31.41			193.30	565.41		NB LEFT TURN LANE
1501+74.29	TO	1503+01.30	127.01		84.33				1.18	7.08			37.95		NB MEDIAN SHOULDER
1494+49.55	TO	1496+57.82	208.27	552.70											INTERSECTION
1495+84.25	TO	1496+57.82	73.57				20.05	8.16	4.09			36.74	107.45		SOUTH MEDIAN NOSE
1488+01.30	TO	1503+01.30	1500.00	4278.89										3.00	SB MAINLINE
1488+01.30	TO	1490+05.33	204.03		135.93				1.89	11.42			61.17		SB MEDIAN SHOULDER
1488+01.30	TO	1494+99.88	698.58	999.93											SB RIGHT TURN LANE
1488+01.30	TO	1494+59.80	658.50				289.71	64.31	36.58			289.71	847.39		SB OUTSIDE SHOULDER
1490+05.33	TO	1494+86.54	481.21	494.67	494.67				4.46	41.55			222.60		SB LEFT TURN LANE (LTL)
1490+05.33	TO	1494+98.30	492.97				188.17	48.93	27.39			220.39	644.64		SB LTL & N. MEDIAN NOSE
1494+99.88	TO	1496+32.63	132.75			141.11					19.76		95.25		SB INTERSECTION / SHOULDER
1496+32.63	TO	1503+01.30	668.67		663.98				6.19	55.77			298.79		SB OUTSIDE SHOULDER
1496+57.82	TO	1503+01.30	643.48		439.20				5.96	36.89			197.64		SB MEDIAN SHOULDER
TOTALS				11352	3380	311	692	165	136	284	44	741	3895	6	

PAVEMENT MARKING SCHEDULE

LOCATION			LENGTH	POLYUREA PAVEMENT MARKING						PAVEMENT MARKING TAPE, TYPE III, 4"	TEMPORARY PAVEMENT MARKING REMOVAL	PAVEMENT MARKING BLACKOUT TAPE, 5"	RAISED RELFLECTIVE PAVEMENT MARKERS	REMARKS
				LINE - 4"				LINE - 24"	LETTERS & SYMBOLS					
				SOLID YELLOW	SOLID WHITE	10' SKIP-DASH WHITE	2' - 6' SKIP-DASH WHITE	STOP BARS						
STA.	TO	STA.		FOOT	FOOT	FOOT	FOOT	FOOT	SQ FT	FOOT	SQ FT	FOOT	EACH	
1488+01.30	TO	1503+01.30	1500.00	812.00	1304	350		24					19	NB MAINLINE
1488+01.30	TO	1503+01.30	1500.00	948	633	350		24					19	SB MAINLINE
1488+01.30	TO	1494+76.00	674.70		1083		78		46.8				11	SB RIGHT TURN LANE
1490+05.26	TO	1494+87.71	482.45	466	254		52	15	46.8				7	SB LEFT TURN LANE
1496+07.83	TO	1501+74.27	566.44	602	253		86	15	46.8				7	NB LEFT TURN LANE
1505+50.00	TO	1513+00.00	750.00							750	250	190		NB TC&P (SPECIAL)
SUB-TOTALS				2828	3527	700	216	78	140	750	250	190	63	
TOTAL				7271				78	140	750	250	190	63	

MODEL: $MODELNAME$
FILE NAME: pw:\\IL084EBIDINTEG.illinois.gov:PWIDOT\Documents\IDOT Offices\District 8\Projects\0876L41\CADData\CADsheets\0876L41-sht-schedule.dgn

USER NAME = schweizerja	DESIGNED - JS	REVISED - _____	
	DRAWN - JS	REVISED - _____	
PLOT SCALE = 100.0000 ' / in.	CHECKED - DM	REVISED - _____	
PLOT DATE = 10/10/2018	DATE - _____	REVISED - _____	

STATE OF ILLINOIS
DEPARTMENT OF TRANSPORTATION

SCHEDULE

SCALE: | SHEET 1 OF 1 SHEETS | STA. _____ TO STA. _____

F.A.P. RTE.	SECTION	COUNTY	TOTAL SHEETS	SHEET NO.
2	(101,102)R-5	MADISON	28	9
		CONTRACT NO. 76L41		
	ILLINOIS	FED. AID PROJECT NHPP-VPCQ(318)		

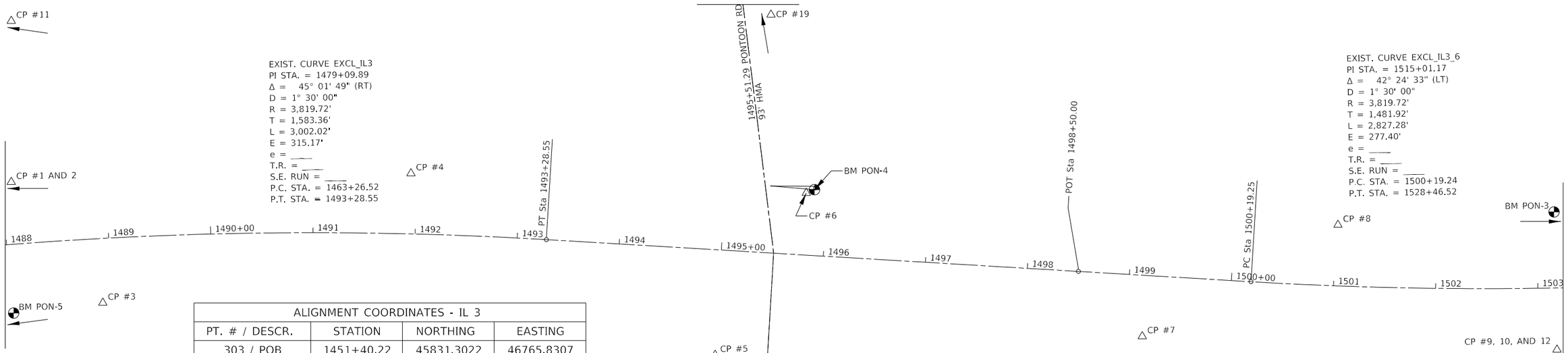

ALIGNMENT COORDINATES - IL 3			
PT. # / DESCR.	STATION	NORTHING	EASTING
303 / POB	1451+40.22	45831.3022	46765.8307
304 / PC	1463+26.53	44775.0972	46225.6949
PI	1479+09.89	43365.3764	45504.7735
302 / CL	1485+00.00	43216.7631	44752.7763
305 / PT	1493+28.55	42879.1187	43997.9245
119	1498+50.00	42718.9787	43501.6716
306 / PC	1500+19.25	42667.0025	43340.6041
301 / CL	1506+00.00	42447.4021	42803.5739
PI	1515+01.17	42211.8979	41930.2944
307 / PT	1528+46.52	40924.7311	41195.9271
300 / POT	1542+43.96	39710.9437	40503.4250

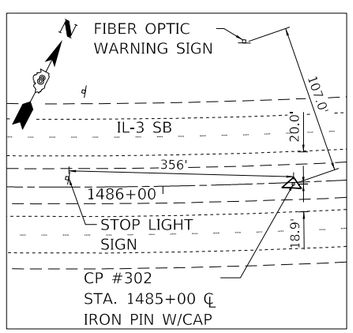

CONTROL POINT #302

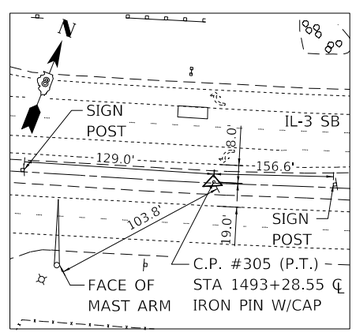

CONTROL POINT #305 (P.T.)

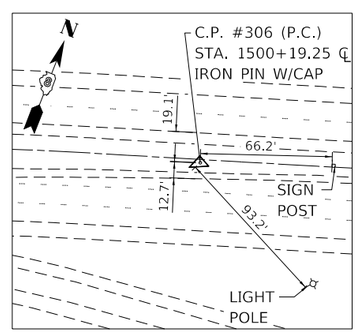

CONTROL POINT #306 (P.C.)

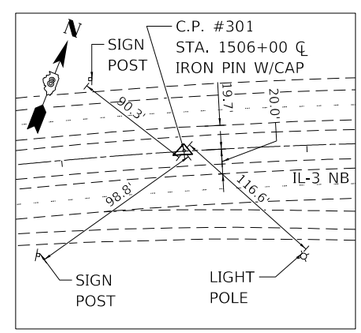

CONTROL POINT #301

BENCHMARKS

BM PON-2: CUT X ON S HEX BOLT, BETWEEN THE LETTERS "ALA" & "Open" ON FIRE HYDRANT, LOCATED ON THE N SIDE OF W. PONTOON RD., 100' E OF THE ENTRANCE TO THE S WALMART PARKING LOT & EVERCLEAN / EVERGREEN CAR WASH, AND N OF PROGRESS PRKY. IN THE NW AREA OF GRANITE CITY.
MEASURED ELEVATION=426.648'

BM PON-3: CUT □ ON THE W SIDE OF THE ROUND CONCRETE FOUNDATION FOR METAL STREET LIGHT POLE #20 LOCATED ON THE E SIDE OF IL.RT.3 ACROSS FROM THE DEAD END OF PROGRESS PKWY. APPROX. 800' S OF THE CL INTERSECTION WITH PONTOON ROAD IN THE NW AREA OF GRANITE CITY.
MEASURED ELEVATION=424.380'

BM PON-4: CUT X ON THE TOP OF THE NW ANCHOR BOLT ON SQUARE METAL BASE FOR THE MAST ARM SIGNAL LIGHT POLE LOCATED ON THE SE CORNER OF IL.RT.3 AND PONTOON ROAD IN THE NW AREA OF GRANITE CITY.
MEASURED ELEVATION=427.993'

BM PON-5: CUT □ ON THE CENTER OF A CONCRETE HEAD WALL OVER A 30" RCP CULVERT RUNNING UNDER IL.RT.3 LOCATED ON THE W SIDE OF IL.RT.3 NEAR THE NE CORNER OF THE STRIP MALL PARKING LOT, APPROX. 800' N OF THE CL INTERSECTION WITH PONTOON ROAD IN THE NW AREA OF GRANITE CITY.
MEASURED ELEVATION=426.348'

MODEL: Default
FILE NAME: pw:\\IL084EBIDINTEG.illinois.gov:PWIDOT\Documents\IDOT Offices\District 8\Projects\D876L41\CADData\CADsheets\D876L41-sht-ATB.dgn

USER NAME = schweizerja	DESIGNED - JS	REVISED -	STATE OF ILLINOIS DEPARTMENT OF TRANSPORTATION
	DRAWN - JS	REVISED -	
PLOT SCALE = 100.0000 ' / in.	CHECKED - DM	REVISED -	
PLOT DATE = 8/10/2018	DATE -	REVISED -	

ALIGNMENT, TIES, AND BENCHMARKS

SCALE: N.T.S. | SHEET 1 OF 2 SHEETS | STA. TO STA.

F.A.P. RTE.	SECTION	COUNTY	TOTAL SHEETS	SHEET NO.
2	(101,102)R-5	MADISON	28	10
		CONTRACT NO. 76L41		
	ILLINOIS	FED. AID PROJECT NHPP-VPCQ(318)		

PROJECT COORDINATES			
POINT NUMBER	NORTHING	EASTING	EXISTING MONUMENT TYPE
1	43373.2599	44891.8412	IRON PIN W/ALUMINUM CAP
2	43116.0553	44694.4722	IRON PIN W/ALUMINUM CAP
3	43094.3510	44379.7718	IRON PIN W/ALUMINUM CAP
4	42866.8803	44144.9249	IRON PIN W/ALUMINUM CAP
5	42924.1945	43803.1091	IRON PIN W/ALUMINUM CAP
6	42744.3009	43777.5676	IRON PIN W/ALUMINUM CAP
7	42755.4233	43420.3600	IRON PIN W/ALUMINUM CAP
8	42584.3392	43281.5607	IRON PIN W/ALUMINUM CAP
9	42538.3866	42854.7165	IRON PIN W/ALUMINUM CAP
10	42290.1484	42639.9090	IRON PIN W/ALUMINUM CAP
11	43977.6041	46638.4348	IRON PIN W/ALUMINUM CAP
12	41874.7467	40351.9974	IRON PIN W/ALUMINUM CAP
19	42007.5075	45170.8346	IRON PIN W/ALUMINUM CAP
NOTE: LOW DISTORTION COORDINATE SYSTEM - MADISON COUNTY			

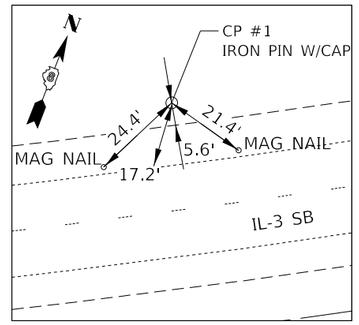

CONTROL POINT #1

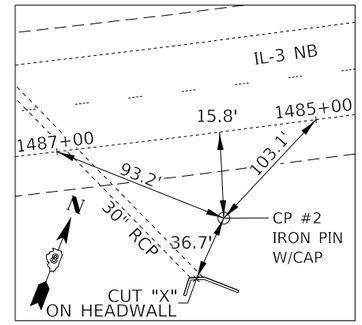

CONTROL POINT #2

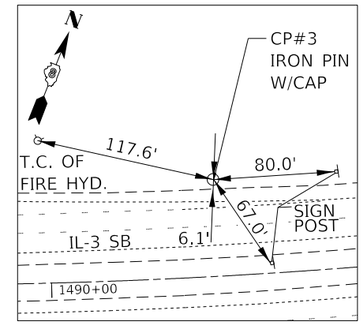

CONTROL POINT #3

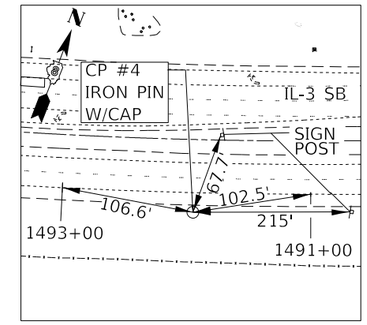

CONTROL POINT #4

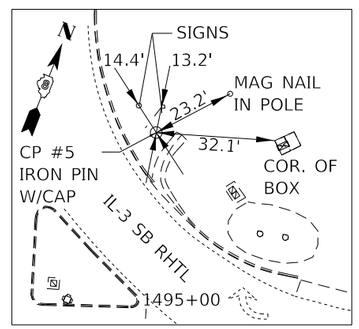

CONTROL POINT #5

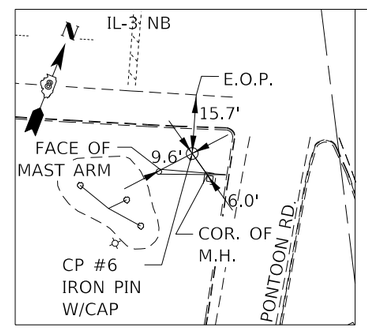

CONTROL POINT #6

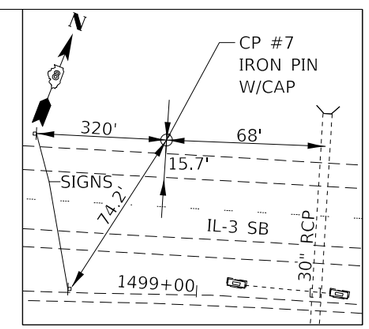

CONTROL POINT #7

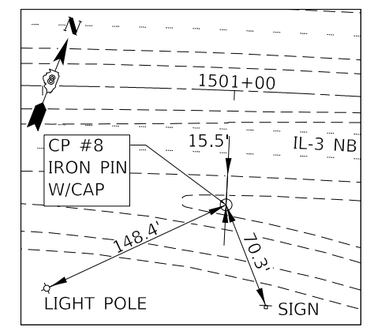

CONTROL POINT #8

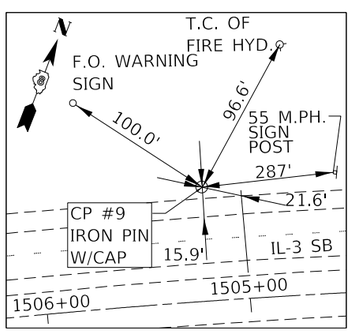

CONTROL POINT #9

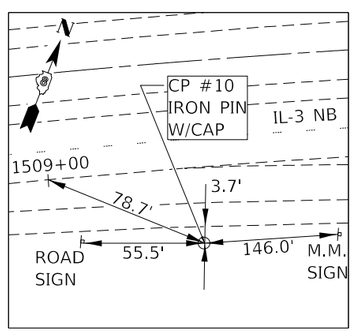

CONTROL POINT #10

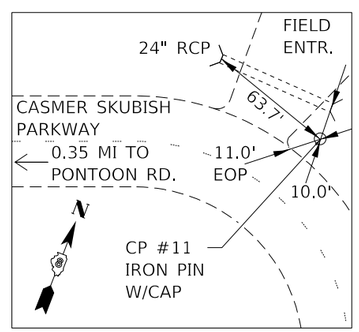

CONTROL POINT #11

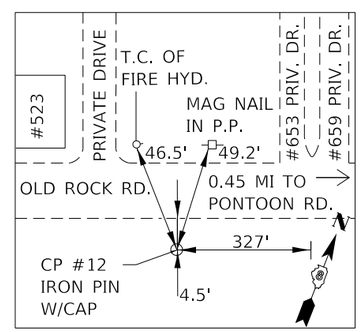

CONTROL POINT #12

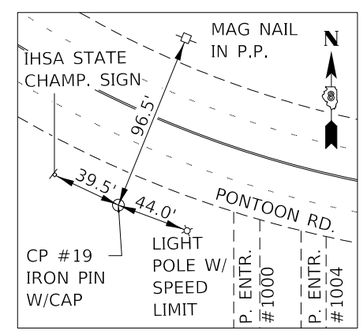

CONTROL POINT #19

MODEL: Default
FILE NAME: pw:\\IL084EBIDINTEG.illinois.gov:PWIDOT\Documents\IDOT Offices\District 8\Projects\D876L41\CADData\CADsheets\D876L41-sht-ATB.dgn

USER NAME = schweizerja	DESIGNED - JS	REVISED -	STATE OF ILLINOIS DEPARTMENT OF TRANSPORTATION
	DRAWN - JS	REVISED -	
PLOT SCALE = 100.0000 ' / in.	CHECKED - DM	REVISED -	
PLOT DATE = 8/10/2018	DATE -	REVISED -	

ALIGNMENT, TIES, AND BENCHMARKS

SCALE: SHEET 2 OF 2 SHEETS STA. TO STA.

F.A.P. RTE.	SECTION	COUNTY	TOTAL SHEETS	SHEET NO.
2	(101,102)R-5	MADISON	28	11
		CONTRACT NO. 76L41		
		ILLINOIS FED. AID PROJECT NHPP-VPCQ(318)		

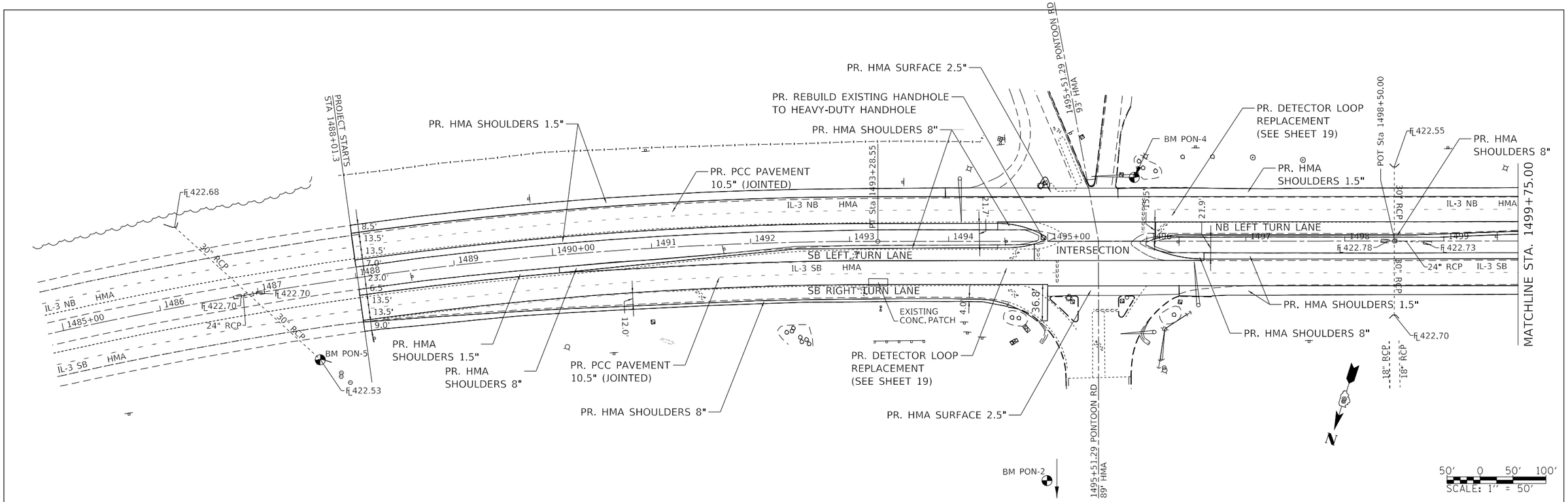

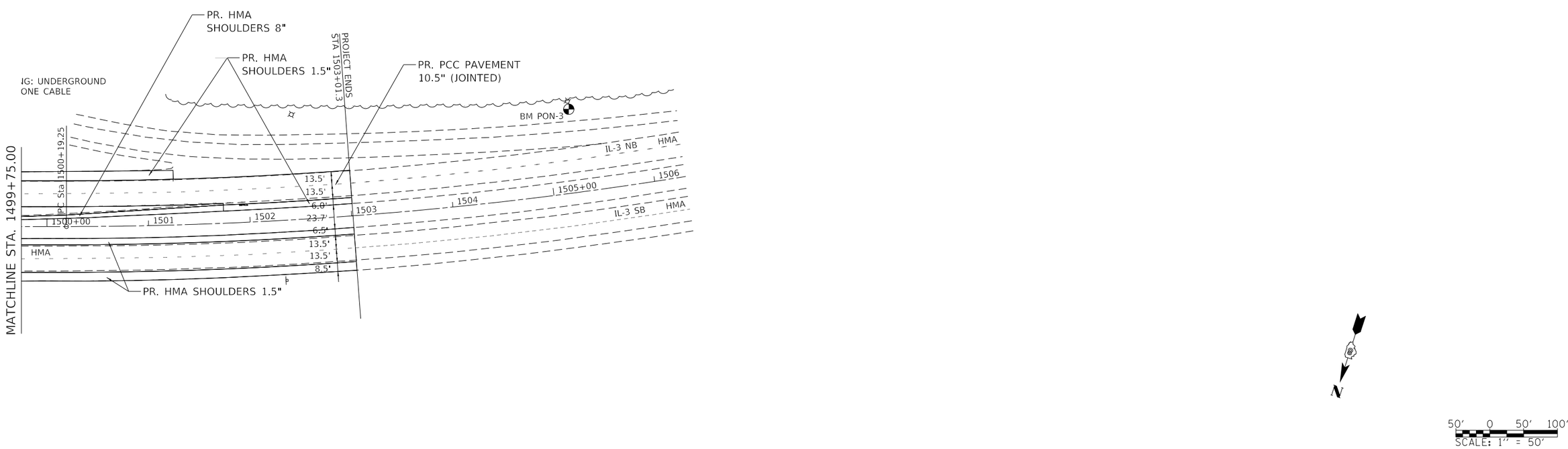

MODEL: Default
FILE NAME: pw:\\IL084EBIDINTEG.illinois.gov:PWIDOT\Documents\IDOT Offices\District 8\Projects\76L41\CADData\CADsheets\076L41-sht-plan.dgn

USER NAME = schweizerja	DESIGNED - JS	REVISED -	STATE OF ILLINOIS DEPARTMENT OF TRANSPORTATION	PLAN	F.A.P. RTE.	SECTION	COUNTY	TOTAL SHEETS / SHEET NO.
	DRAWN - JS	REVISED -			2	(101,102)R-5	MADISON	28 / 12
PLOT SCALE = 100.0000 ' / in.	CHECKED - DM	REVISED -					CONTRACT NO. 76L41	
PLOT DATE = 8/10/2018	DATE -	REVISED -		SCALE: 1"=50' SHEET 1 OF 1 SHEETS STA. 1488+01.30 TO STA. 1503+01.30			ILLINOIS FED. AID PROJECT NHPP-VPCO(318)	

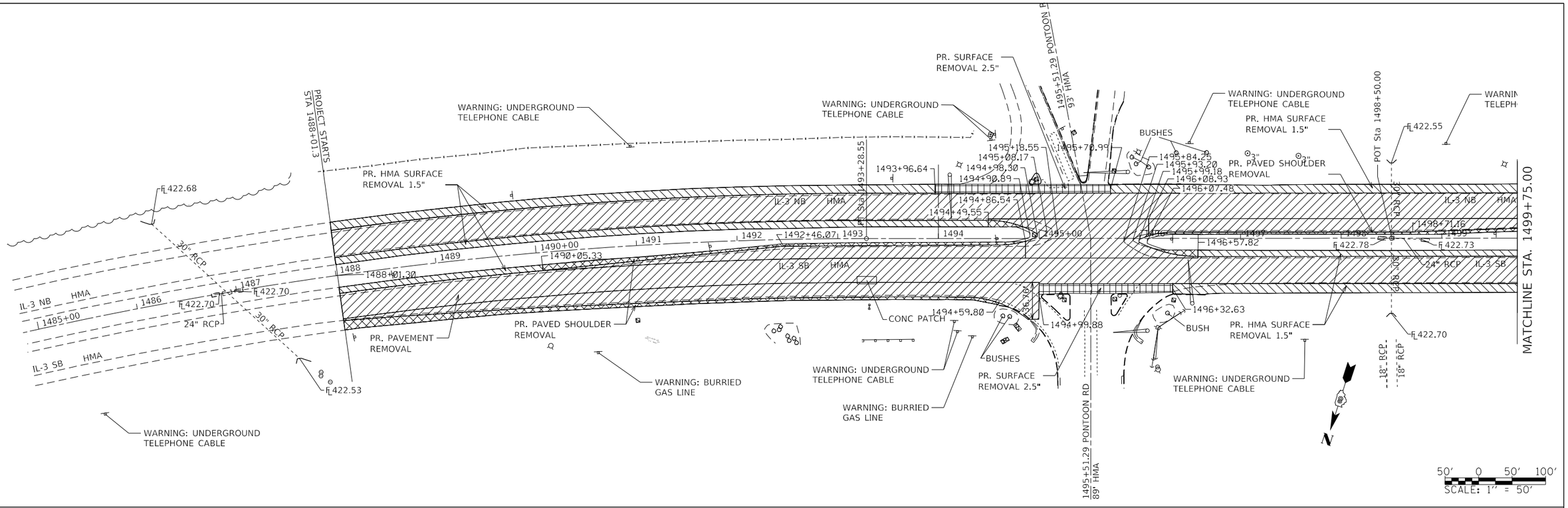

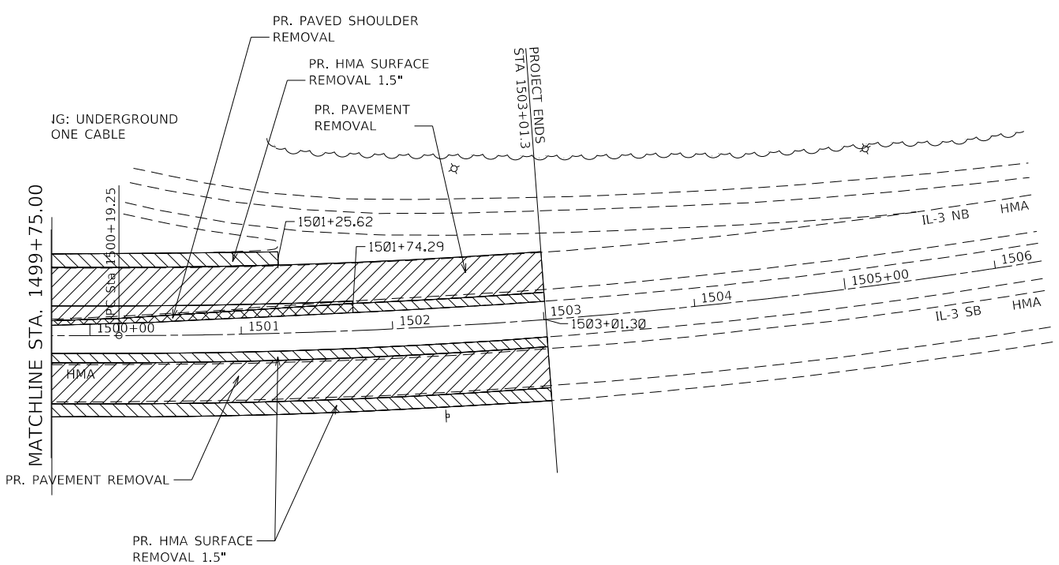

SUGGESTED SEQUENCE OF OPERATIONS

1. CLOSE THE INTERSECTION AS SHOWN IN TRAFFIC CONTROL SHEETS 14 AND 15.
2. REMOVE EXISTING PAVEMENT, SUBBASES, AND SHOULDERS.
3. CONSTRUCT NEW PAVEMENT AND SHOULDERS.
4. INSTALL DETECTOR LOOPS.
2. INSTALL PERMANENT POLUREA PAVEMENT MARKINGS AND RAISED REFLECTIVE PAVEMENT MARKERS.

PAVEMENT REMOVAL (SPECIAL)

PAVED SHOULDER REMOVAL

SURFACE REMOVAL 2.5"

SURFACE REMOVAL 1.5"

N

50' 0 50' 100'
SCALE: 1" = 50'

MODEL: Default
FILE NAME: pw:\\IL084EBIDNTEG.illinois.gov:PWIDOT\Documents\IDOT Offices\District 8\Projects\D876L41\CADData\CADsheets\D876L41-sht-removal.dgn

USER NAME = schweizerja	DESIGNED - JS	REVISED -	STATE OF ILLINOIS DEPARTMENT OF TRANSPORTATION
	DRAWN - JS	REVISED -	
PLOT SCALE = 100.0000 ' / in.	CHECKED - DM	REVISED -	
PLOT DATE = 8/10/2018	DATE -	REVISED -	

REMOVALS

SCALE: 1"=50' | SHEET 1 OF 1 SHEETS | STA. 1488+01.30 TO STA. 1503+01.30

F.A.P. RTE.	SECTION	COUNTY	TOTAL SHEETS	SHEET NO.
2	(101,102)R-5	MADISON	28	13
		CONTRACT NO. 76L41		
		ILLINOIS	FED. AID PROJECT NHPP-VPCO(318)	

IL ROUTE 3 AND MISSOURI AVENUE / GRANITE PARK INTERSECTION
TRAFFIC CONTROL AND PROTECTION B.L.R. 21 (SPECIAL)

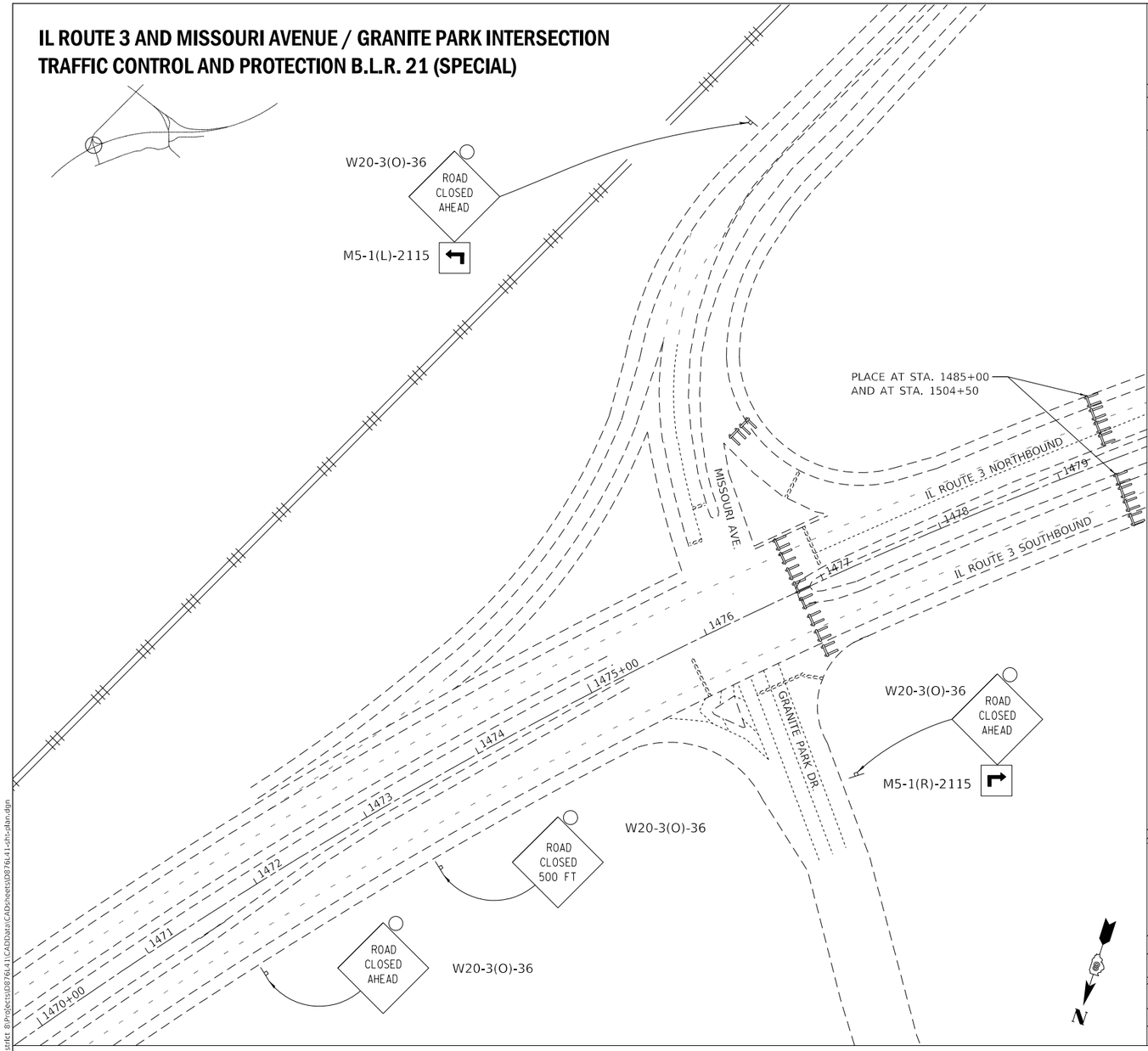

MISSOURI AVENUE AND PONTOON RD. INTERSECTION
TRAFFIC CONTROL AND PROTECTION B.L.R. 21 (SPECIAL)

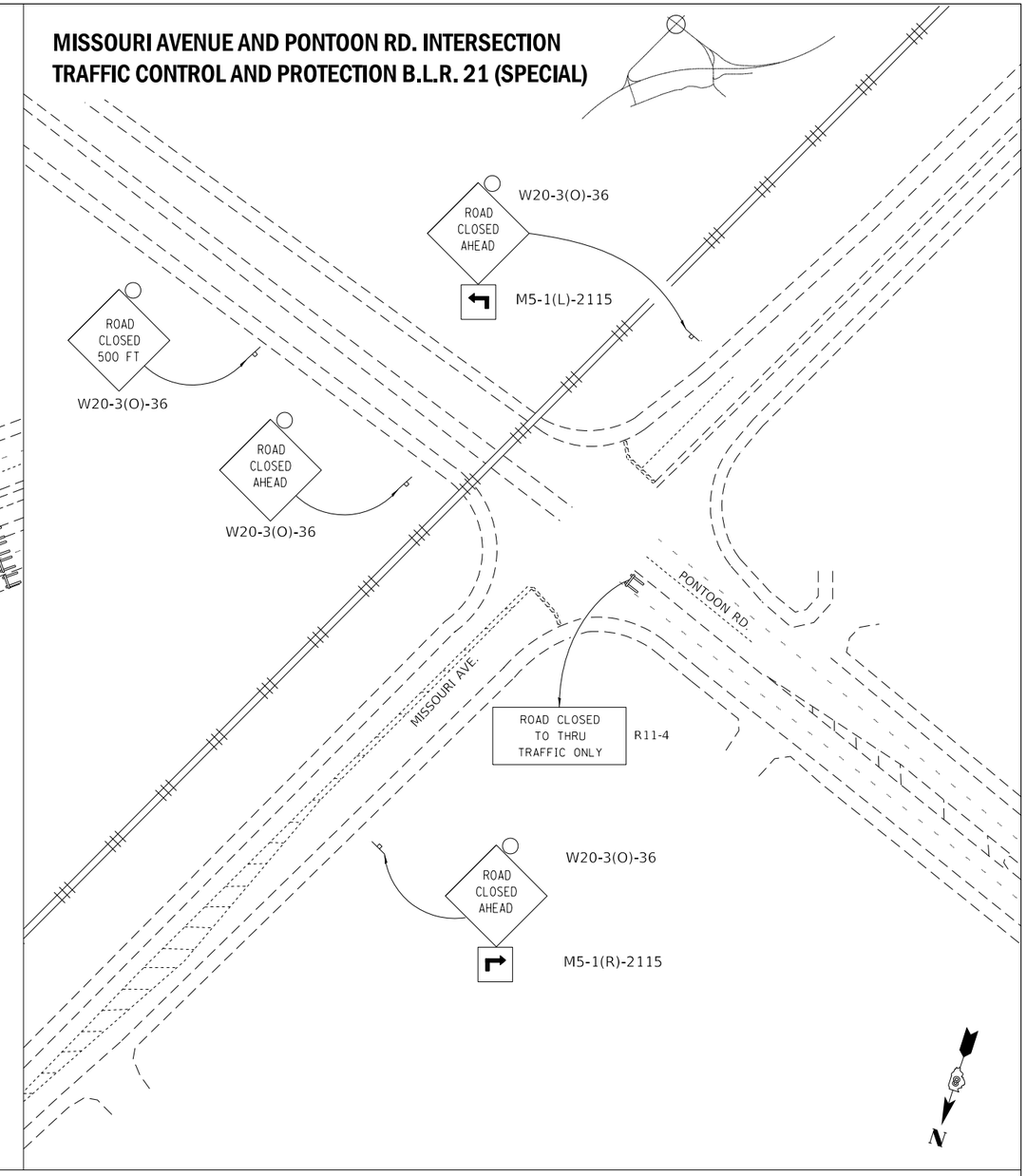

SYMBOLS

TYPE III BARRICADE WITH TYPE A LOW INTENSITY FLASHING LIGHT ATTACHED

SIGN WITH TYPE A LOW INTENSITY FLASHING LIGHT ATTACHED

ARROW BOARD

NOTES

1. THE CONTRACTOR SHALL FURNISH THE SIGNS AND POSTS AND ERECT SIGNS AT THE LOCATIONS SHOWN ON THIS SHEET, AS DIRECTED BY THE RESIDENT ENGINEER. THE POSTS SHALL REMAIN THE PROPERTY OF THE CONTRACTOR.
2. TRAFFIC CONTROL SETUP SHALL BE PER HIGHWAY STANDARD 701422, B.L.R. 21 (SPECIAL), AND TRAFFIC CONTROL AND PROTECTION (SPECIAL) AS SHOWN.
3. THE HEIGHT TO THE BOTTOM OF THE LOWEST SIGN SHALL NOT BE LESS THAN 6' FROM THE EDGE OF PAVEMENT. AS DIRECTED BY THE RESIDENT ENGINEER.
4. CONTRACTOR SHALL FURNISH ADVANCE WARNING SIGNS, ROAD CLOSURE SIGNS, MESSAGE BOARD AND TYPE 3 BARRICADES.
5. ALL ADVANCE SIGNS SHALL BE 48" FLUORESCENT ORANGE WITH FLASHING LIGHTS.

MODEL: Default
FILE NAME: pw:\\IL084EBIDINTEG.illinois.gov:PWIDOT\Documents\IDOT Offices\District 8\Projects\D876L41\CADData\CADsheets\D876L41-tfc-plan.dgn

USER NAME = schweizerja	DESIGNED - JS	REVISED -	
	DRAWN - JS	REVISED -	
PLOT SCALE = 100.0000 ' / in.	CHECKED - DM	REVISED -	
PLOT DATE = 8/10/2018	DATE -	REVISED -	

STATE OF ILLINOIS
DEPARTMENT OF TRANSPORTATION

TRAFFIC CONTROL

SCALE: N.T.S. | SHEET 1 OF 2 SHEETS | STA. TO STA.

F.A.P. RTE.	SECTION	COUNTY	TOTAL SHEETS	SHEET NO.
2	(101,102)R-5	MADISON	28	14

CONTRACT NO. 76L41

ILLINOIS | FED. AID PROJECT NHPP-VPCQ(318)

PONTOON RD. NORTHWEST OF IL ROUTE 3
TRAFFIC CONTROL AND PROTECTION B.L.R. 21 (SPECIAL)

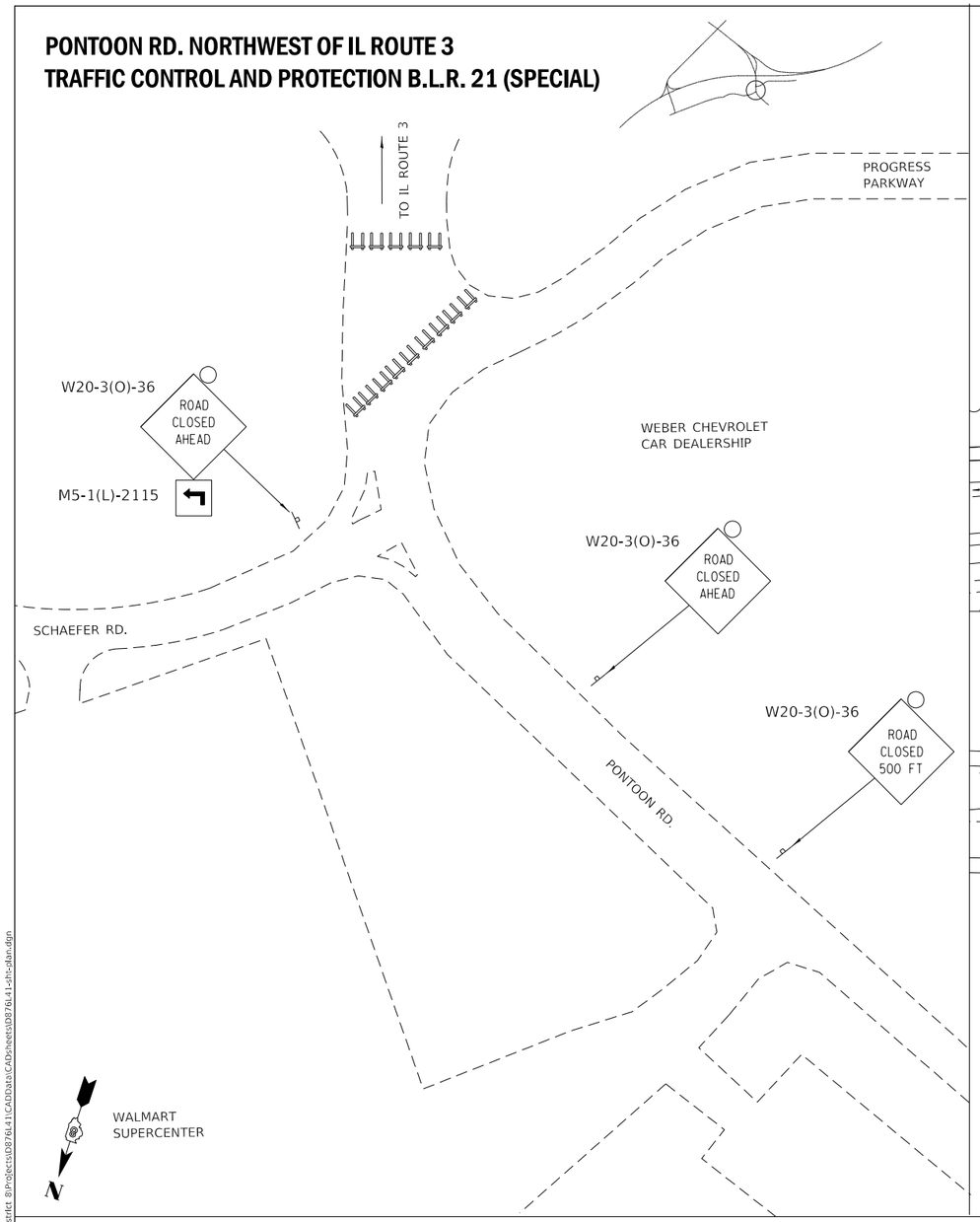

IL ROUTE 3 NORTHBOUND EXIT RAMP TO PONTOON RD.
TRAFFIC CONTROL AND PROTECTION (SPECIAL) &
TRAFFIC CONTROL AND PROTECTION 701422

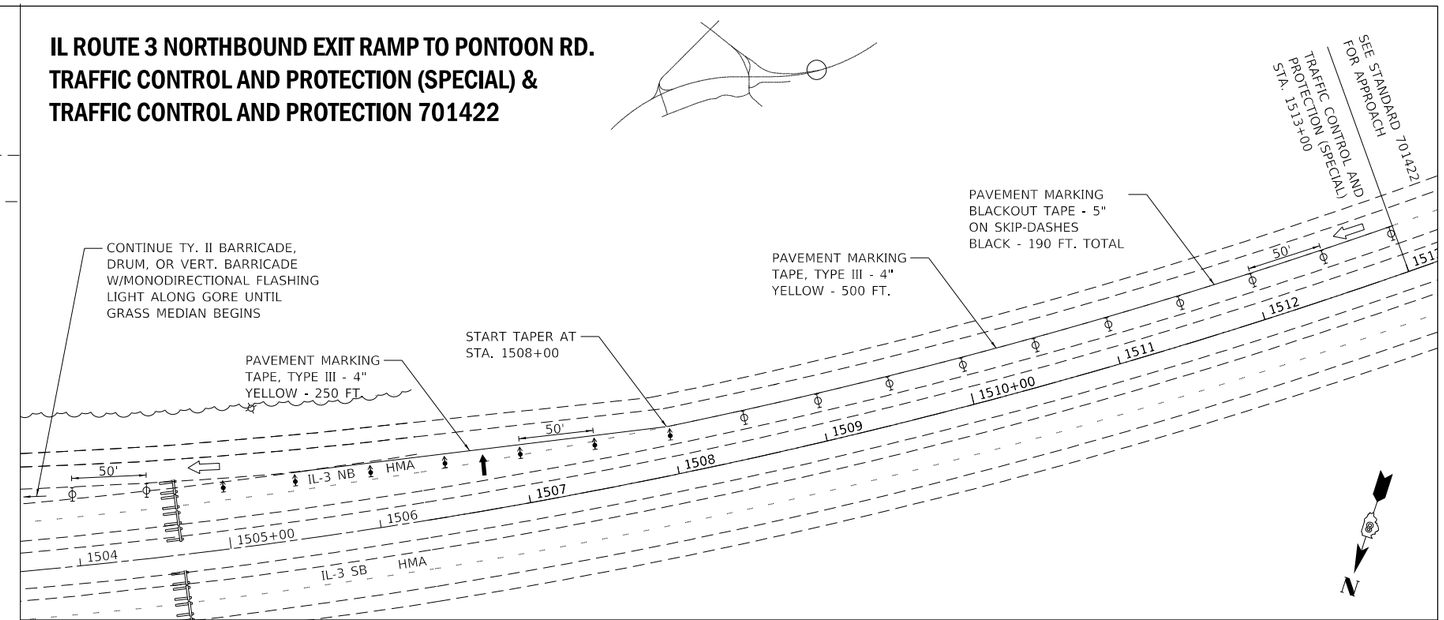

PONTOON RD. SOUTHEAST OF IL ROUTE 3
TRAFFIC CONTROL AND PROTECTION B.L.R. 21 (SPECIAL)

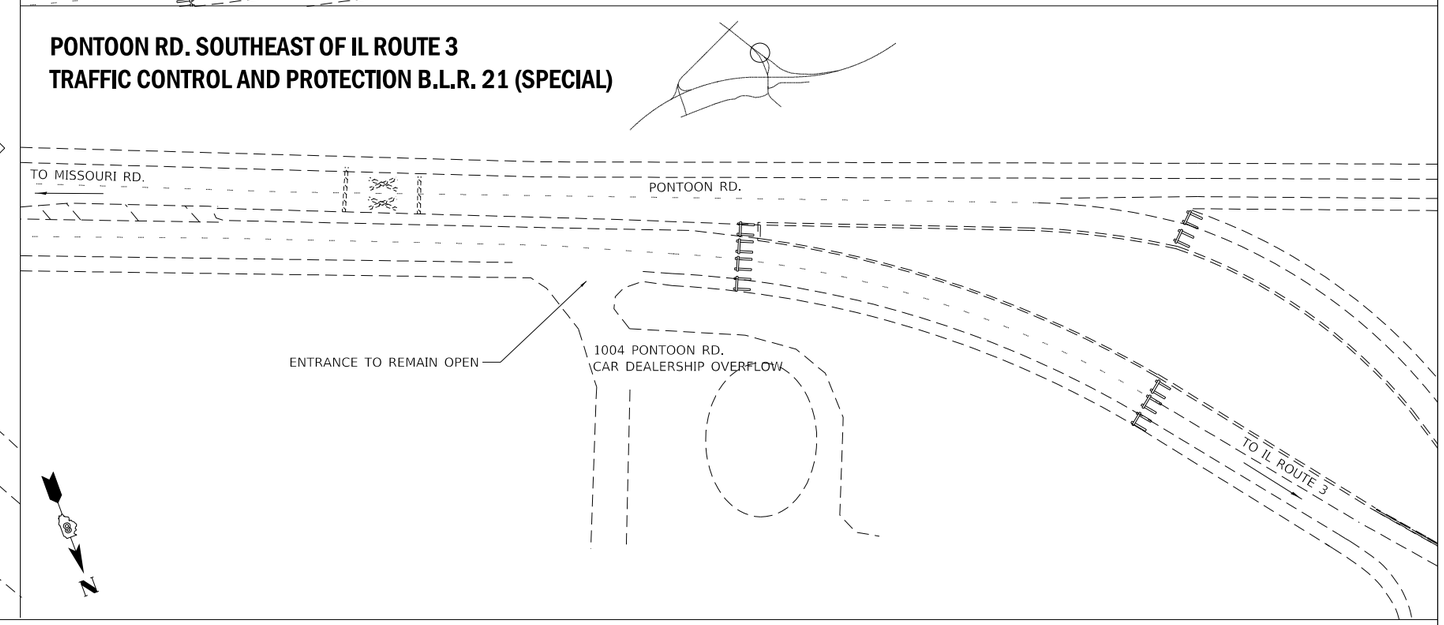

SYMBOLS

TYPE III BARRICADE WITH TYPE A LOW INTENSITY FLASHING LIGHT ATTACHED

SIGN WITH TYPE A LOW INTENSITY FLASHING LIGHT ATTACHED

ARROW BOARD

NOTES

1. THE CONTRACTOR SHALL FURNISH THE SIGNS AND POSTS AND ERECT SIGNS AT THE LOCATIONS SHOWN ON THIS SHEET, AS DIRECTED BY THE RESIDENT ENGINEER. THE POSTS SHALL REMAIN THE PROPERTY OF THE CONTRACTOR.
2. TRAFFIC CONTROL SETUP SHALL BE PER HIGHWAY STANDARD 701422, B.L.R. 21 (SPECIAL), AND TRAFFIC CONTROL AND PROTECTION (SPECIAL) AS SHOWN.
3. THE HEIGHT TO THE BOTTOM OF THE LOWEST SIGN SHALL NOT BE LESS THAN 6' FROM THE EDGE OF PAVEMENT. AS DIRECTED BY THE RESIDENT ENGINEER.
4. CONTRACTOR SHALL FURNISH ADVANCE WARNING SIGNS, ROAD CLOSURE SIGNS, MESSAGE BOARD AND TYPE 3 BARRICADES.
5. ALL ADVANCE SIGNS SHALL BE 48" FLUORESCENT ORANGE WITH FLASHING LIGHTS.

MODEL: Default
FILE NAME: pw:\\IL084EBIDINTEG.illinois.gov:PWIDOT\Documents\IDOT Offices\District 8\Projects\D876L41\CADData\CADsheets\D876L41-sht-plan.dgn

USER NAME = schweizerja	DESIGNED - JS	REVISED -	
	DRAWN - JS	REVISED -	
PLOT SCALE = 100.0000 ' / in.	CHECKED - DM	REVISED -	
PLOT DATE = 8/10/2018	DATE -	REVISED -	

STATE OF ILLINOIS
DEPARTMENT OF TRANSPORTATION

TRAFFIC CONTROL

SCALE: N.T.S. | SHEET 2 OF 2 SHEETS | STA. TO STA.

F.A.P. RTE.	SECTION	COUNTY	TOTAL SHEETS	SHEET NO.
2	(101,102)R-5	MADISON	28	15

CONTRACT NO. 76L41

ILLINOIS | FED. AID PROJECT NHPP-VPCQ(318)

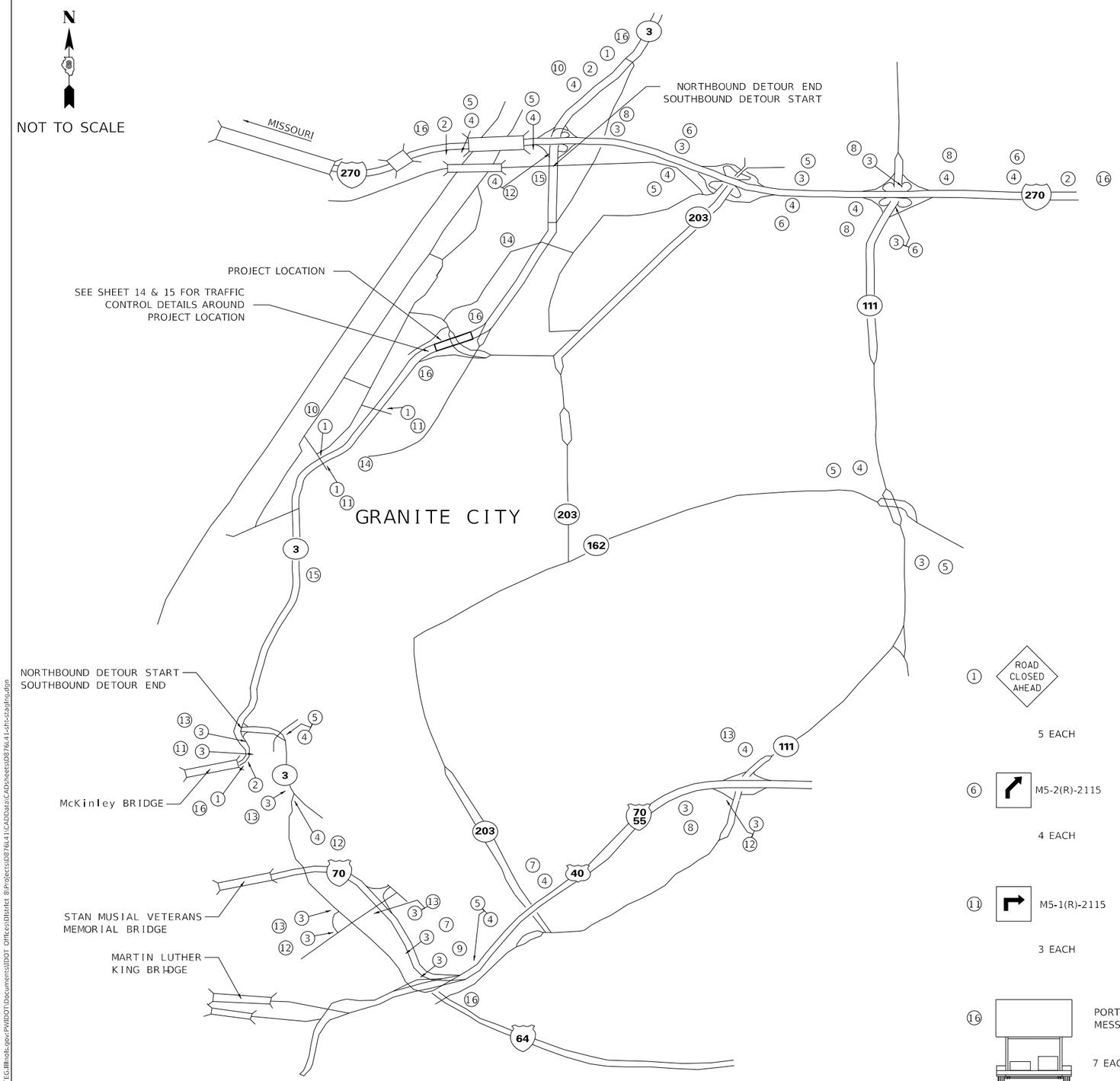

DETOUR ROUTE ————

NORTHBOUND DETOUR ROUTE LENGTH = 18.0 MILES

SOUTHBOUND DETOUR ROUTE LENGTH = 17.2 MILES

NOTES

1. THE CONTRACTOR SHALL FURNISH THE SIGNS AND POSTS AND ERECT SIGNS AT THE LOCATIONS SHOWN ON THIS SHEET, AS DIRECTED BY THE RESIDENT ENGINEER. THE POSTS SHALL REMAIN THE PROPERTY OF THE CONTRACTOR.
2. SIGN SPACING WILL BE 400' OR TO FIT FIELD CONDITIONS.
3. THE HEIGHT TO THE BOTTOM OF THE LOWEST SIGN SHALL NOT BE LESS THAN 6.0' FROM THE EDGE OF PAVEMENT, AS DIRECTED BY THE RESIDENT ENGINEER.
4. CONTRACTOR SHALL FURNISH ADVANCE WARNING SIGNS, ROAD CLOSURE SIGNS, CHANGEABLE MESSAGE BOARDS AND TYPE 3 BARRICADES.
5. ALL ADVANCE SIGNS SHALL BE 48" FLUORESCENT ORANGE WITH FLASHING LIGHTS.
6. THE ABOVE NOTED WORK SHALL BE PAID FOR AT THE CONTRACT UNIT PRICE, LUMP SUM, FOR DETOUR SIGNING AND NO OTHER COMPENSATION WILL BE ALLOWED.
7. SEVEN CHANGEABLE MESSAGE SIGNS SHALL BE REQUIRED AND PLACED AT THE LOCATIONS SHOWN ON THE PLANS, AS DIRECTED BY THE RESIDENT ENGINEER. TWO CHANGEABLE MESSAGE SIGNS SHALL BE PLACED TWO WEEKS PRIOR TO ROADWAY CLOSURE NEAR THE PROJECT LIMITS. ALL CHANGEABLE MESSAGE SIGNS WILL BE PAID FOR AS CHANGEABLE MESSAGE SIGN CAL DAY.
8. QUANTITY OF SIGNS SHOWN BELOW DOES NOT INCLUDE THE SIGNS REQUIRED FOR TRAFFIC CONTROL SETUPS 701422, B.L.R. 21 (SPECIAL), AND TRAFFIC CONTROL AND PROTECTION (SPECIAL) AS SHOWN ON TRAFFIC CONTROL SHEETS 14 AND 15.

SIGNS TO BE FURNISHED BY THE CONTRACTOR

1	ROAD CLOSED AHEAD	2	DETOUR AHEAD	3	DETOUR / NORTH / ILLINOIS 3	M4-8-2412 / M3-2-2412 / M1-50-2424	4	DETOUR / SOUTH / ILLINOIS 3	M4-8-2412 / M3-4-2412 / M1-50-2424	5		M6-3-2115			
	5 EACH		4 EACH		16 EACH			15 EACH			8 EACH				
6		M5-2(R)-2115	7		M5-2(L)-2115	8		M6-2-2115	9		M6-?-2115	10		M5-1(L)-2115	
	4 EACH			2 EACH			5 EACH			1 EACH			2 EACH		
11		M5-1(R)-2115	12		M6-1(L)-2115	13		M6-1(R)-2115	14	R11-3A-6030 ROAD CLOSED 1 MILE AHEAD LOCAL TRAFFIC ONLY		15	R11-3A-6030 ROAD CLOSED 2 MILE AHEAD LOCAL TRAFFIC ONLY		
	3 EACH			4 EACH			5 EACH			2 EACH			2 EACH		

16 PORTABLE CHANGABLE MESSAGE SIGN

7 EACH

MODEL: $MODELNAME$
FILE NAME: pw:\\IL084EBIDINTEG.illinois.gov:PWIDOT\Documents\IDOT Offices\District 8\Projects\0876L41\CADData\CADsheets\0876L41-sht-staging.dgn

USER NAME = schweizerja	DESIGNED - JS	REVISED -	
	DRAWN - JS	REVISED -	
PLOT SCALE = 100.0000 ' / in.	CHECKED - DM	REVISED -	
PLOT DATE = 8/10/2018	DATE -	REVISED -	

STATE OF ILLINOIS
DEPARTMENT OF TRANSPORTATION

DETOUR ROUTE

SCALE: N.T.S. | SHEET 1 OF 1 SHEETS | STA. TO STA.

F.A.P. RTE.	SECTION	COUNTY	TOTAL SHEETS	SHEET NO.
2	(101,102)R-5	MADISON	28	16

CONTRACT NO. 76L41

ILLINOIS | FED. AID PROJECT NHPP-VPCQ(318)

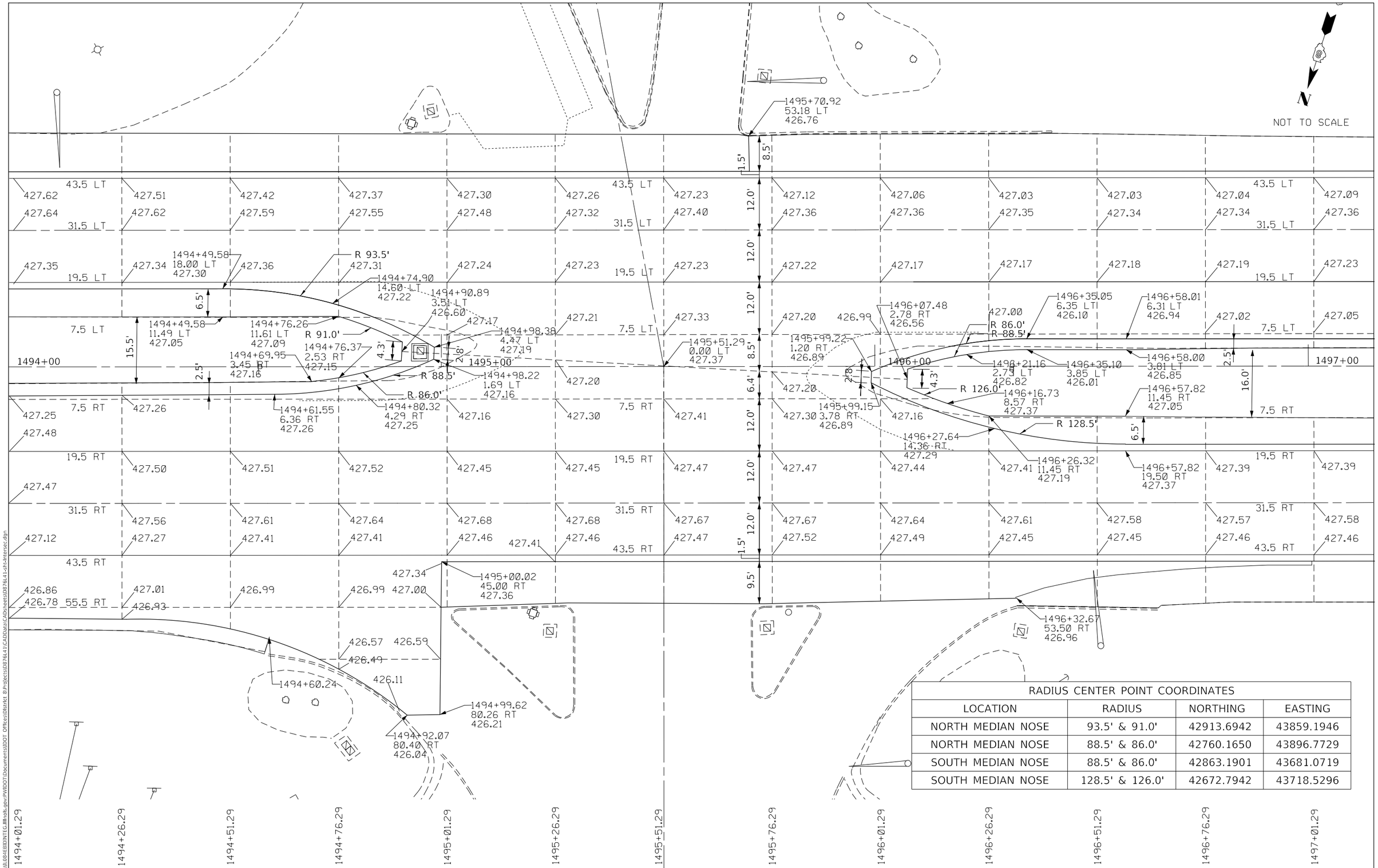

RADIUS CENTER POINT COORDINATES			
LOCATION	RADIUS	NORTHING	EASTING
NORTH MEDIAN NOSE	93.5' & 91.0'	42913.6942	43859.1946
NORTH MEDIAN NOSE	88.5' & 86.0'	42760.1650	43896.7729
SOUTH MEDIAN NOSE	88.5' & 86.0'	42863.1901	43681.0719
SOUTH MEDIAN NOSE	128.5' & 126.0'	42672.7942	43718.5296

MODEL: Default
FILE NAME: pw:\\IL084EBIDINTEG.illinois.gov:PWIDOT\Documents\IDOT Offices\District 8\Projects\D876L41\CADData\CADsheets\D876L41-sht-intersec.dgn

USER NAME = schweizerja	DESIGNED - JS	REVISED -	
	DRAWN - JS	REVISED -	
PLOT SCALE = 20.0000 ' / in.	CHECKED - DM	REVISED -	
PLOT DATE = 8/10/2018	DATE -	REVISED -	

STATE OF ILLINOIS
DEPARTMENT OF TRANSPORTATION

INTERSECTION ELEVATIONS

SCALE: N.T.S. | SHEET 1 OF 1 SHEETS | STA. 1494+01.29 TO STA. 1497+01.29

F.A.P. RTE.	SECTION	COUNTY	TOTAL SHEETS	SHEET NO.
2	(101,102) R - 5	MADISON	28	17

CONTRACT NO. 76K98

ILLINOIS | FED. AID PROJECT NHPP-VPCQ(318)

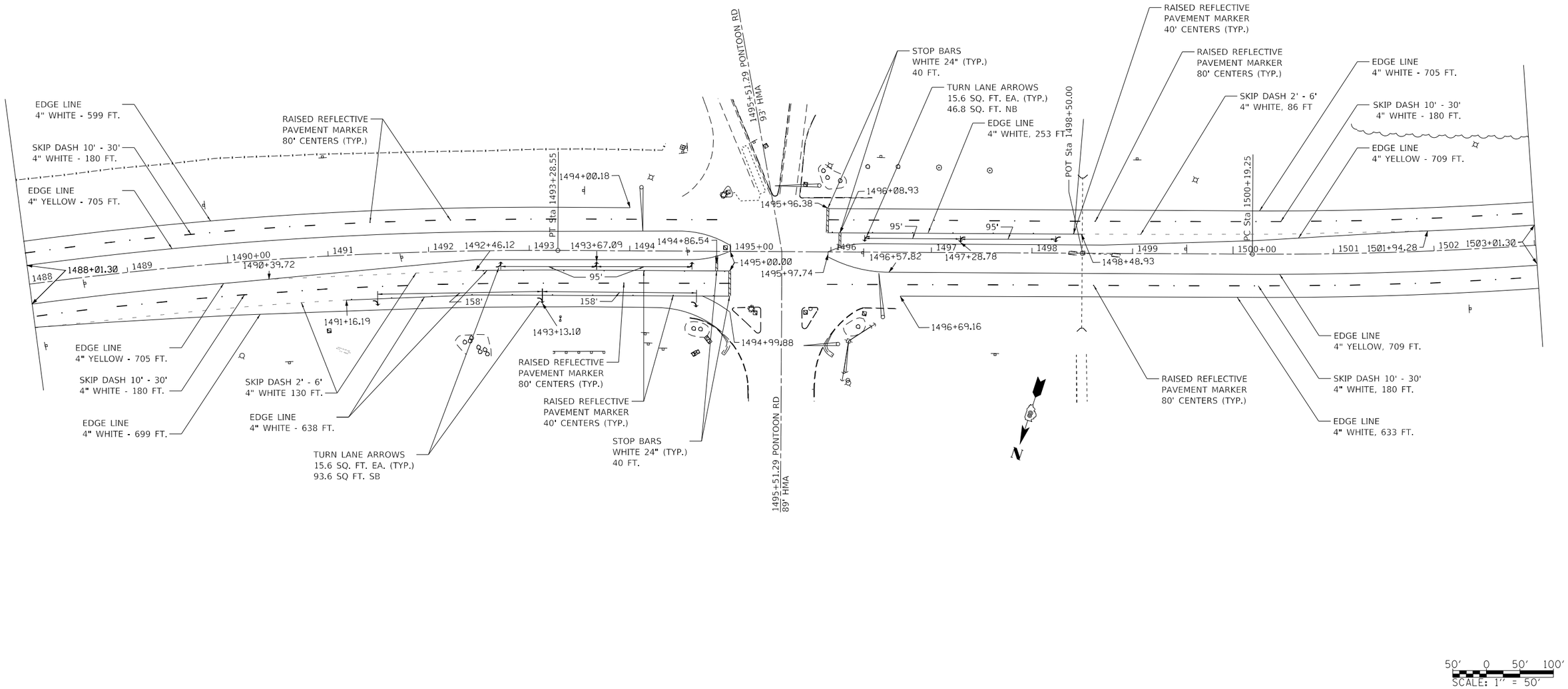

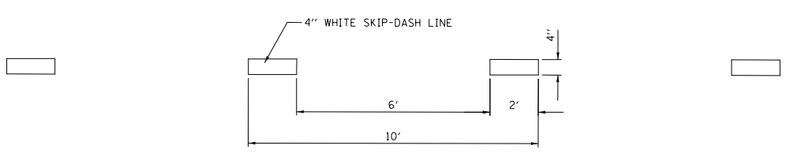

TYPICAL APPLICATION
FOR WHITE SKIP-DASH AUXILIARY LANE LINE

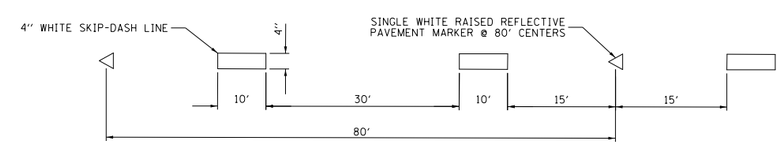

TYPICAL APPLICATION
FOR WHITE SKIP-DASH LINE
WITH RAISED REFLECTIVE PAVEMENT MARKERS

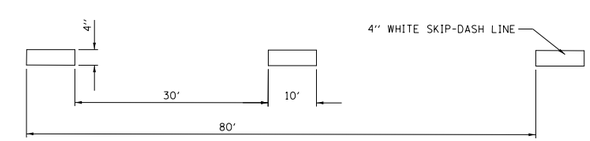

TYPICAL APPLICATION
FOR WHITE SKIP-DASH LINE

MODEL: Default
FILE NAME: pw:\\IL084EBIDNTEC.illinois.gov:PWIDOT\Documents\IDOT Offices\District 8\Projects\D876L41\CADData\CADsheets\D876L41-sht-smk.dgn

USER NAME = schweizerja	DESIGNED - JS	REVISED -	
	DRAWN - JS	REVISED -	
PLOT SCALE = 100.2976 ' / in.	CHECKED - DM	REVISED -	
PLOT DATE = 8/10/2018	DATE -	REVISED -	

STATE OF ILLINOIS
DEPARTMENT OF TRANSPORTATION

PAVEMENT MARKING

SCALE: 1"=50' | SHEET 1 OF 1 SHEETS | STA. 1488+01.30 TO STA. 1503+01.30

F.A.P. RTE.	SECTION	COUNTY	TOTAL SHEETS	SHEET NO.
2	(101,102)R-5	MADISON	28	18
		CONTRACT NO. 76L41		
		ILLINOIS	FED. AID PROJECT NHPP-VPCQ(318)	

NOTES:

SEE TABLE "DETECTOR LOOP REQUIREMENTS AND CALCULATIONS" FOR LOOP SIZE AND CALCULATED NUMBER OF TURNS.
SEE "DETAIL A" FOR INSTALLING DETECTOR LOOP WIRES IN EXISTING CONDUITS.

SCHEDULE OF QUANTITIES			TOTAL QUANTITIES	IL 3 & PONTOON RD.
CODE NO	ITEM	UNIT		
80300100	LOCATING UNDERGROUND CABLE	FOOT	70	70
88600600	DETECTOR LOOP REPLACEMENT	FOOT	2088	2088
89502378	REBUILD EXISTING HANDHOLE TO HEAVY-DUTY HANDHOLE	EACH	1	1

TRAFFIC SIGNALS LEGEND

- EXISTING SIGNAL POST
- EXISTING SIGNAL POST WITH BACKPLATE
- EXISTING TRAFFIC SIGNAL MAST ARM
- EXISTING HANDHOLE
- EXISTING DOUBLE HANDHOLE
- EXISTING DETECTOR LOOP
- EXISTING CONTROLLER
- EXISTING SERVICE INSTALLATION
- EXISTING CONDUIT
- PROPOSED HEAVEY DUTY HANDHOLE
- PROPOSED DETECTOR LOOP

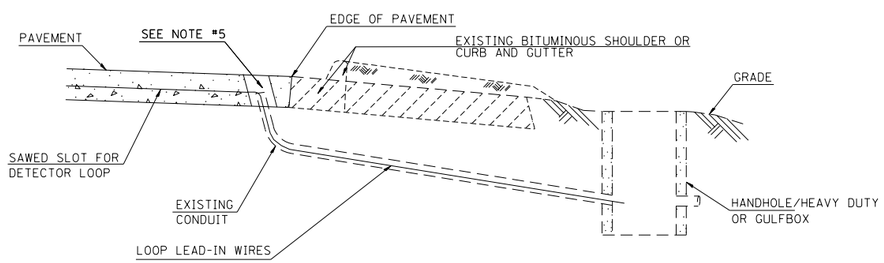

DETAIL A
(NO SCALE)
INSTALLING DETECTOR LOOP WIRES IN EXISTING CONDUIT

1. DRILL OUT PAVEMENT SEALANT AND CLEAN EXISTING CONDUIT.
2. REMOVE EXISTING DETECTOR LOOP WIRES TO HANDHOLE/HEAVY DUTY OR GULFBOX, AS SPECIFIED.
3. INSTALL NEW LOOP LEAD-IN WIRES IN EXISTING CONDUIT.
4. SPLICE NEW DETECTOR LOOP WIRES TO EXISTING LOOP LEAD-IN CABLE IN HANDHOLE/HEAVY DUTY OR GULFBOX, AS SPECIFIED.
5. FILL HOLE WITH APPROVED SEALER. PREVENT SEALER FROM ENTERING INTO CONDUIT.
6. LOCATING UNDERGROUND CABLE WILL BE PAID FOR SEPARATELY.

NOT A PAY ITEM. THE COST OF THIS WORK SHALL BE INCLUDED IN THE PAY ITEM "DETECTOR LOOP REPLACEMENT"

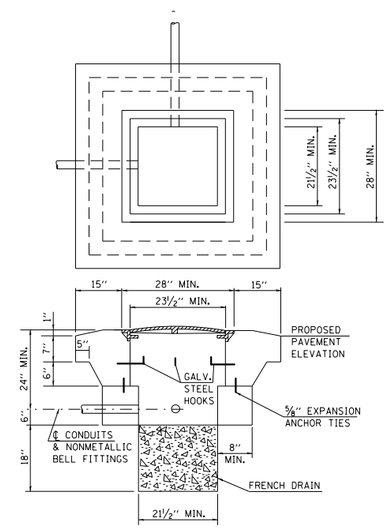

DETAIL B
REBUILD TO HEAVY DUTY HANDHOLE

NOTES:

1. USE ⅝" Ø EXPANSION ANCHOR TIES AT 6" CENTERS, 20 TOTAL. COST OF MATERIAL AND LABOR WILL BE INCIDENTAL TO REBUILD HEAVY DUTY HANDHOLE.
2. CANNOT EXCAVATE BELOW TOP OF EXISTING CONDUIT UNLESS OTHERWISE SPECIFIED TO BE REMOVED.
3. THE CONTRACTOR SHALL BE RESPONSIBLE FOR ANY DAMAGE THAT MAY OCCUR TO EXISTING CABLES.
4. THE MINIMUM WEIGHT OF THE FRAME AND COVER SHALL BE 260 LBS.
5. THIS DETAIL IS TO BE USED IN CONJUNCTION WITH STANDARD 814001. GENERAL NOTES AND THE SPECIAL PROVISION REBUILD EXISTING HANDHOLE TO HEAVY DUTY HANDHOLE.

DETECTOR LOOP REQUIREMENTS AND CALCULATIONS

LOOP #	PHASE # (Φ)	LOOP SIZE (FT. X FT.)	REQUIRED # OF TURNS	CALCULATED INDUCTANCE MICROHENRIES (μH)	CALCULATED RESISTANCE OHMS (Ω)
1. EB CCO	6	6′ x 6′	6	260	0.5
2. EB CCO	6	6′ x 6′	6	263	0.5
3. EBLT CD	1	6′ x 50′(Q)	3-6-3	786	1.6
4. NB CCO	3	6′ x 6′	6	257	0.4
5. NB CCO	3	6′ x 6′	6	260	0.5
6. NB THRU CD	3	6′ x 50′(Q)	3-6-3	792	1.7
7. NB THRU CD	3	6′ x 50′(Q)	3-6-3	787	1.6
8. NBRT CD	3	6′ x 50′(Q)	3-6-3	790	1.7
9. NBRT CD	3	6′ x 50′(Q)	3-6-3	795	1.8
10. WB CCO	2	6′ x 6′	6	263	0.5
11. WB CCO	2	6′ x 6′	6	260	0.5
12. WBLT CD	5	6′ x 50′(Q)	3-6-3	787	1.6
13. WB THRU CD	4	6′ x 50′(Q)	3-6-3	796	1.8
14. SB THRU CD	4	6′ x 50′(Q)	3-6-3	789	1.7
15. SBRT CD	4	6′ x 50′(Q)	3-6-3	786	1.6
16. SBRT CD	4	6′ x 50′(Q)	3-6-3	792	1.7

THE ABOVE VALUES ARE CALCULATED OF COMBINED LOOP AND LEAD-IN INDUCTANCE AND RESISTANCE. ACTUAL MEASURED VALUES SHOULD BE WITHIN +/- 20% OF THESE VALUES.

Q=QUADRAPOLE

(*) =SEE DETAIL ''A''

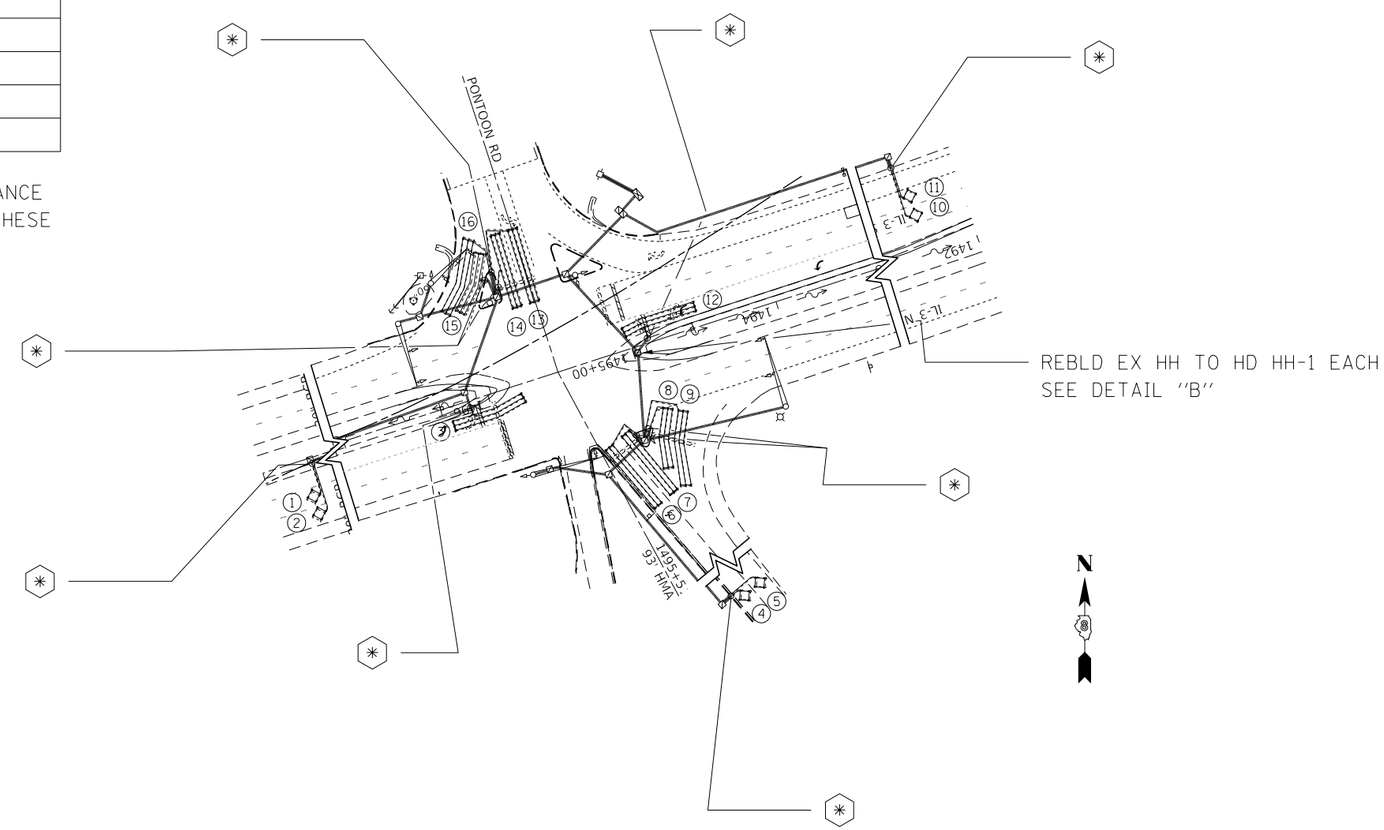

USER NAME = schweizerja	DESIGNED - JB	REVISED -	STATE OF ILLINOIS DEPARTMENT OF TRANSPORTATION
	DRAWN - JB	REVISED -	
PLOT SCALE = 100.0000 ' / in.	CHECKED -	REVISED -	
PLOT DATE = 8/10/2018	DATE -	REVISED -	

DETECTOR LOOP REPLACEMENT
GENERAL NOTES, SCHEDULE OF QUANTITIES, DETAIL AND LEGEND

SCALE: SHEET 2 OF 2 SHEETS STA. TO STA.

F.A.P. RTE.	SECTION	COUNTY	TOTAL SHEETS	SHEET NO.
2	(101, 102)R-5	MADISON	28	20
		CONTRACT NO. 76L41		
	ILLINOIS	FED. AID PROJECT NHPP-VPCQ(318)		

MODEL: Default
FILE NAME: pw:\\IL084EBIDINTEG.illinois.gov:PWIDOT\Documents\IDOT Offices\District 8\Projects\D876L41\CADData\CADsheets\D876L41-sht-ts.dgn

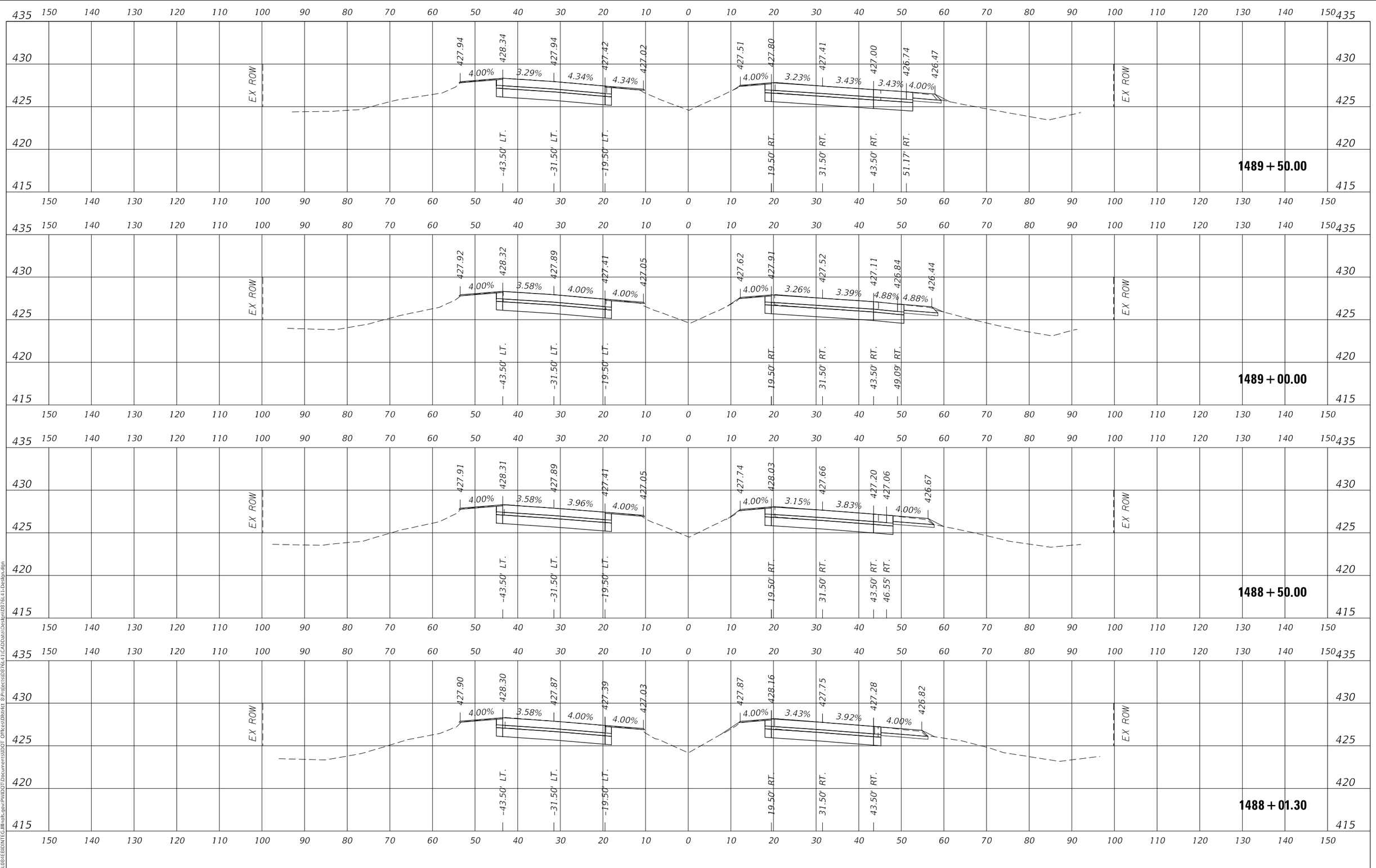

FINAL SURVEY		BY	DATE
	SURVEYED IDOT	WEBBER & DOWNING	DEC. 2012
	PLOTTED		
	TEMPLATE		
NOTE BOOK	AREAS		
	AREAS CHECKED		
NO.			

ORIGINAL SURVEY		BY	DATE
	SURVEYED		
	PLOTTED		
	TEMPLATE		
NOTE BOOK	AREAS		
	AREAS CHECKED		
NO.			

MODEL: IL3_100
FILE NAME: pw:\\IL084EBIDINTEG.illinois.gov:PWIDOT\Documents\IDOT Offices\District 8\Projects\d876L41\CADData\Design\D876L41-Design.dgn

USER NAME = schweizerja	DESIGNED - JS	REVISED -	
	DRAWN - JS	REVISED -	
PLOT SCALE = 20.0000 ' / in.	CHECKED - DM	REVISED -	
PLOT DATE = 8/10/2018	DATE -	REVISED -	

STATE OF ILLINOIS
DEPARTMENT OF TRANSPORTATION

CROSS SECTION

SCALE: | SHEET 1 OF 8 SHEETS | STA. 1488+01.30 TO STA. 1489+50.00

F.A.P. RTE.	SECTION	COUNTY	TOTAL SHEETS	SHEET NO.
2	(101, 102) R - 5	MADISON	28	21

CONTRACT NO. 76L41

ILLINOIS | FED. AID PROJECT # NHPP-VPCQ(318)

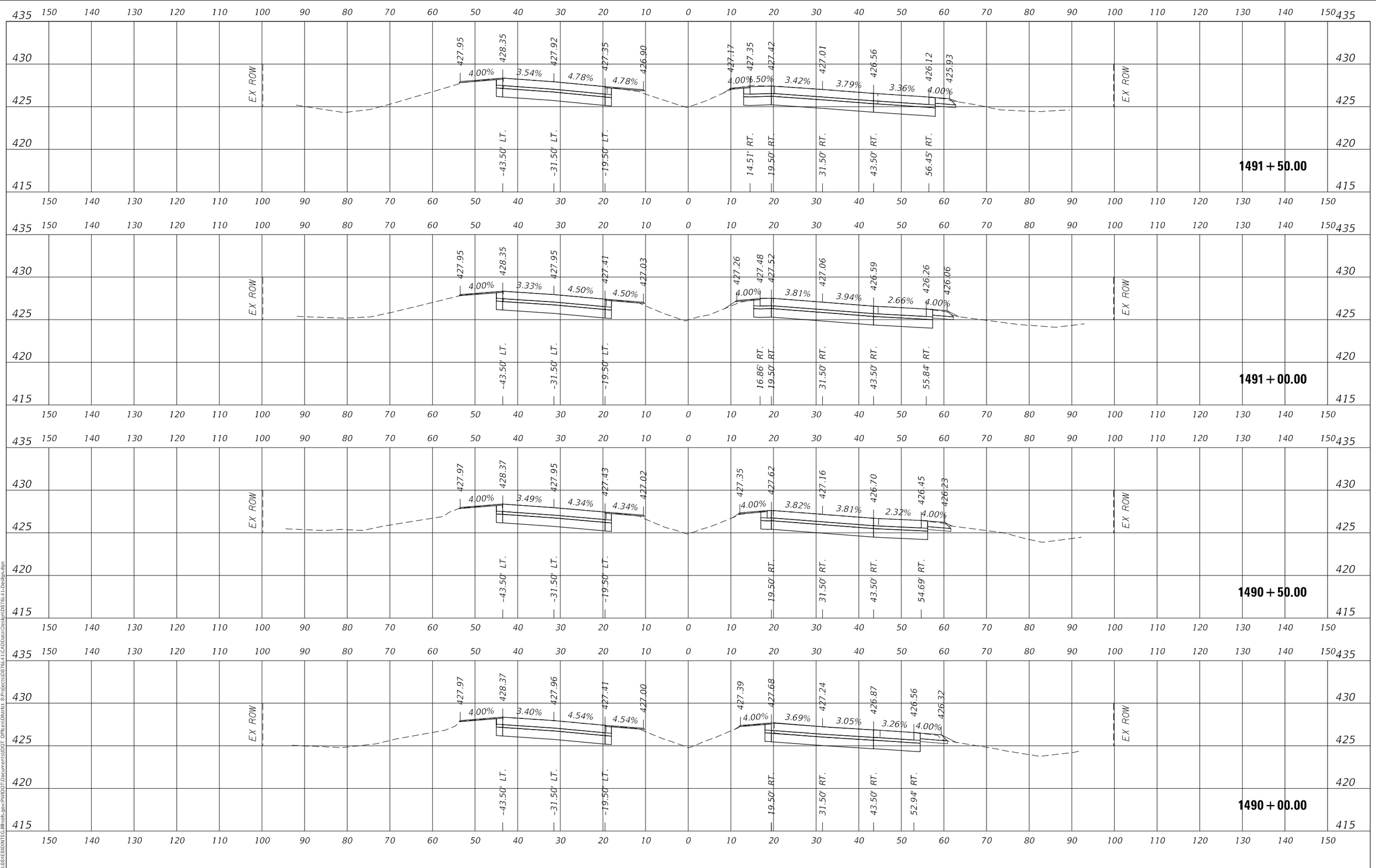

FINAL SURVEY	BY	DATE
SURVEYED IDOT	WEBER & DOWNING	DEC. 2012
PLOTTED		
TEMPLATE		
AREAS		
AREAS CHECKED		
NOTE BOOK NO.		

ORIGINAL SURVEY	BY	DATE
SURVEYED		
PLOTTED		
TEMPLATE		
AREAS		
AREAS CHECKED		
NOTE BOOK NO.		

MODEL: IL3_100
FILE NAME: pw:\\IL084EBIDINTEG.illinois.gov:PWIDOT\Documents\IDOT Offices\District 8\Projects\d876L41\CADData\Design\D876L41-Design.dgn

USER NAME = schweizerja	DESIGNED - JS	REVISED -
	DRAWN - JS	REVISED -
PLOT SCALE = 20.0000 ' / in.	CHECKED - DM	REVISED -
PLOT DATE = 8/10/2018	DATE -	REVISED -

STATE OF ILLINOIS
DEPARTMENT OF TRANSPORTATION

CROSS SECTION

SCALE: | SHEET 2 OF 8 SHEETS | STA. 1490+00.00 TO STA. 1491+50.00

F.A.P. RTE.	SECTION	COUNTY	TOTAL SHEETS	SHEET NO.
2	(101, 102) R - 5	MADISON	28	22
		CONTRACT NO. 76L41		
		ILLINOIS	FED. AID PROJECT # NHPP-VPCQ(318)	

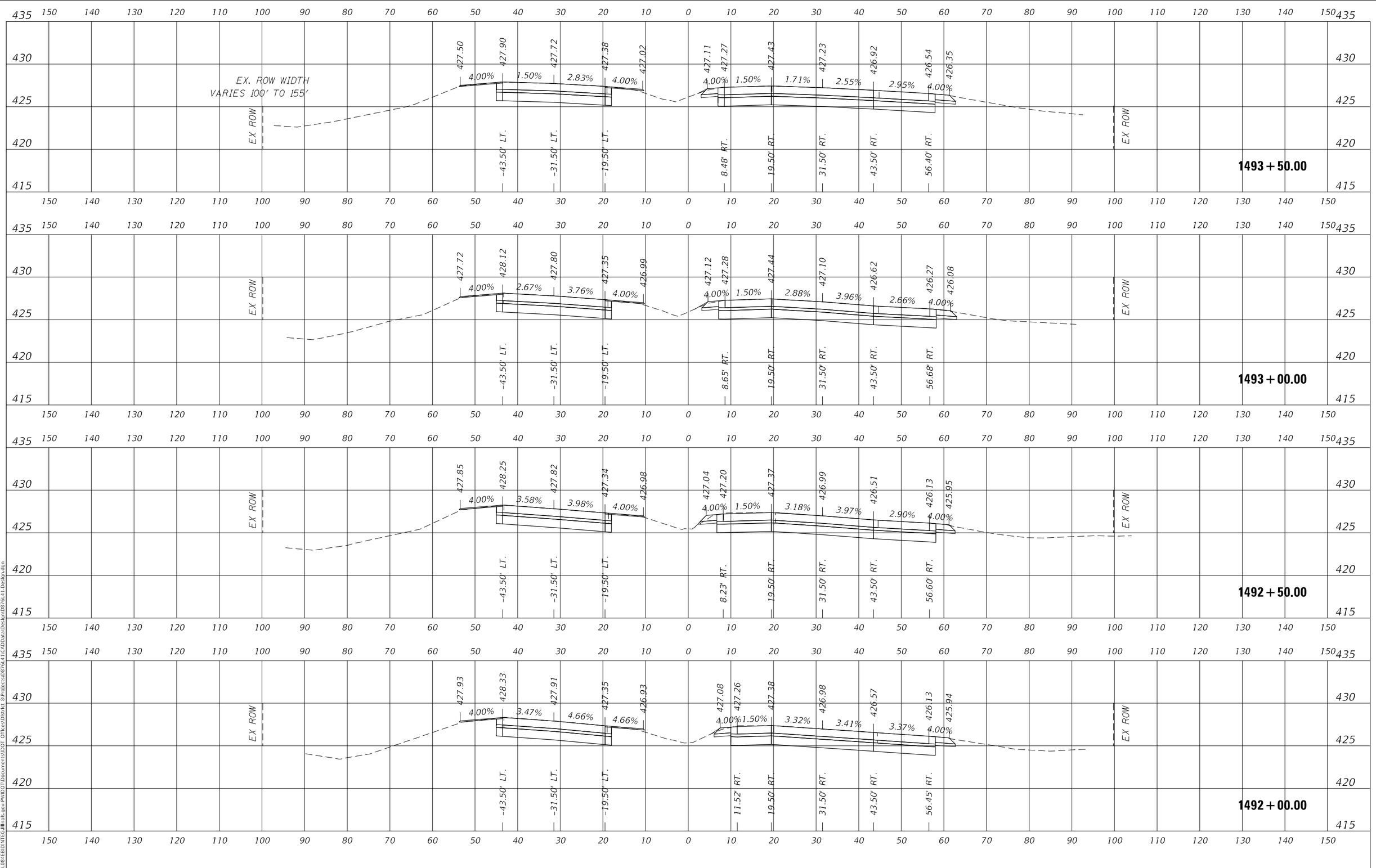

FINAL SURVEY	BY	DATE
SURVEYED IDOT	WEBER & DOWNING	DEC. 2012
PLOTTED		
TEMPLATE		
AREAS		
AREAS CHECKED		
NOTE BOOK NO.		

ORIGINAL SURVEY	BY	DATE
SURVEYED		
PLOTTED		
TEMPLATE		
AREAS		
AREAS CHECKED		
NOTE BOOK NO.		

MODEL: IL3_100
FILE NAME: pw:\\IL084EBIDINTEG.illinois.gov:PWIDOT\Documents\IDOT Offices\District 8\Projects\d876L41\CADData\Design\D876L41-Design.dgn

USER NAME = schweizerja	DESIGNED - JS	REVISED -
	DRAWN - JS	REVISED -
PLOT SCALE = 20.0000 ' / in.	CHECKED - DM	REVISED -
PLOT DATE = 8/10/2018	DATE -	REVISED -

STATE OF ILLINOIS
DEPARTMENT OF TRANSPORTATION

CROSS SECTION

SCALE: | SHEET 3 OF 8 SHEETS | STA. 1492+00.00 TO STA. 1493+50.00

F.A.P. RTE.	SECTION	COUNTY	TOTAL SHEETS	SHEET NO.
2	(101, 102) R - 5	MADISON	28	23

CONTRACT NO. 76L41

ILLINOIS | FED. AID PROJECT # NHPP-VPCQ(318)

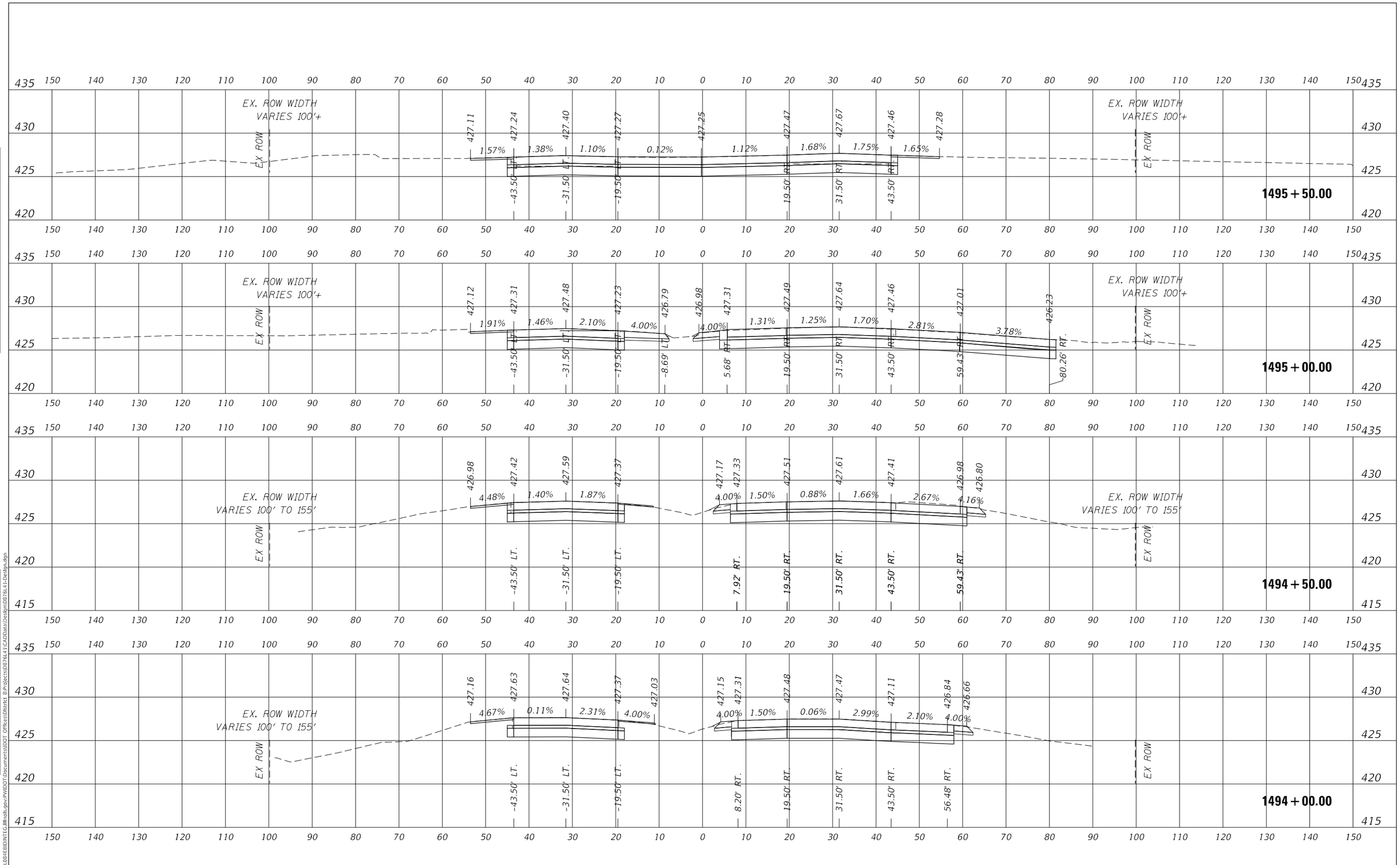

FINAL SURVEY	BY	DATE
SURVEYED IDOT	WEBER & DOWLING	DEC. 2012
PLOTTED		
TEMPLATE		
AREAS		
AREAS CHECKED		
NOTE BOOK		
NO.		

ORIGINAL SURVEY	BY	DATE
SURVEYED		
PLOTTED		
TEMPLATE		
AREAS		
AREAS CHECKED		
NOTE BOOK		
NO.		

MODEL: IL3_100
FILE NAME: pw:\\IL084EBIDINTEG.illinois.gov:PWIDOT\Documents\IDOT Offices\District 8\Projects\876L41\CADData\Design\876L41-Design.dgn

USER NAME = schweizerja	DESIGNED - JS	REVISED -	
	DRAWN - JS	REVISED -	
PLOT SCALE = 20.0000 ' / in.	CHECKED - DM	REVISED -	
PLOT DATE = 8/10/2018	DATE -	REVISED -	

STATE OF ILLINOIS
DEPARTMENT OF TRANSPORTATION

CROSS SECTION

SCALE: | SHEET 4 OF 8 SHEETS | STA. 1494+00.00 TO STA. 1495+50.00

F.A.P. RTE.	SECTION	COUNTY	TOTAL SHEETS	SHEET NO.
2	(101, 102) R - 5	MADISON	28	24

CONTRACT NO. 76L41

ILLINOIS | FED. AID PROJECT # NHPP-VPCQ(318)

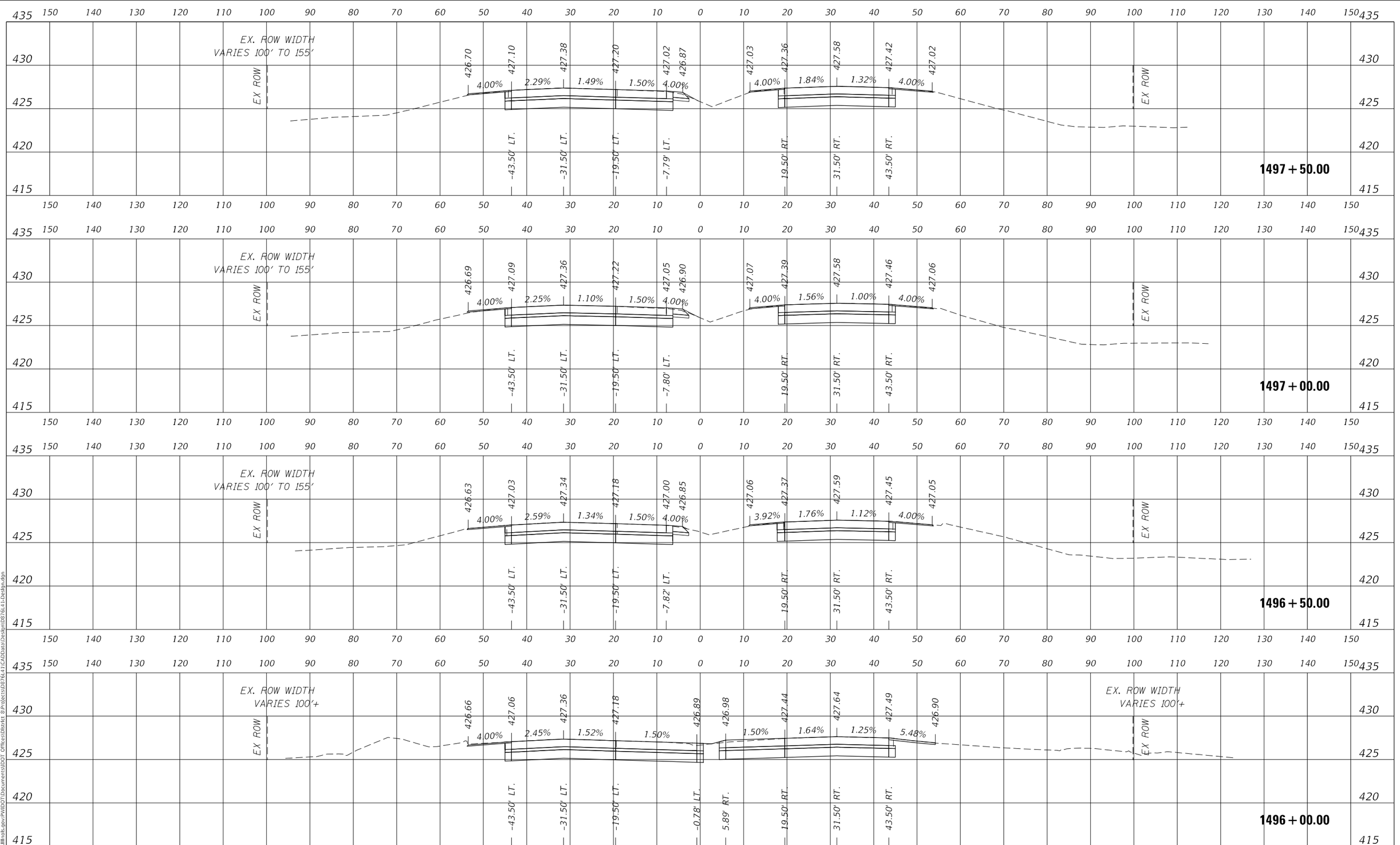

FINAL SURVEY	BY	DATE
SURVEYED IDOT	WEBER & DOWNING	DEC. 2012
PLOTTED		
TEMPLATE		
AREAS		
AREAS CHECKED		
NOTE BOOK NO.		

ORIGINAL SURVEY	BY	DATE
SURVEYED		
PLOTTED		
TEMPLATE		
AREAS		
AREAS CHECKED		
NOTE BOOK NO.		

MODEL: IL3_100
FILE NAME: pw:\\IL084EBIDINTEG.illinois.gov:PWIDOT\Documents\IDOT Offices\District 8\Projects\d876L41\CADData\Design\D876L41-Design.dgn

USER NAME = schweizerja	DESIGNED - JS	REVISED -
	DRAWN - JS	REVISED -
PLOT SCALE = 20.0000 ' / in.	CHECKED - DM	REVISED -
PLOT DATE = 8/10/2018	DATE -	REVISED -

STATE OF ILLINOIS
DEPARTMENT OF TRANSPORTATION

CROSS SECTION

SCALE: | SHEET 5 OF 8 SHEETS | STA. 1496+00.00 TO STA. 1497+50.00

F.A.P. RTE.	SECTION	COUNTY	TOTAL SHEETS	SHEET NO.
2	(101, 102) R - 5	MADISON	28	25

CONTRACT NO. 76L41

ILLINOIS | FED. AID PROJECT # NHPP-VPCQ(318)

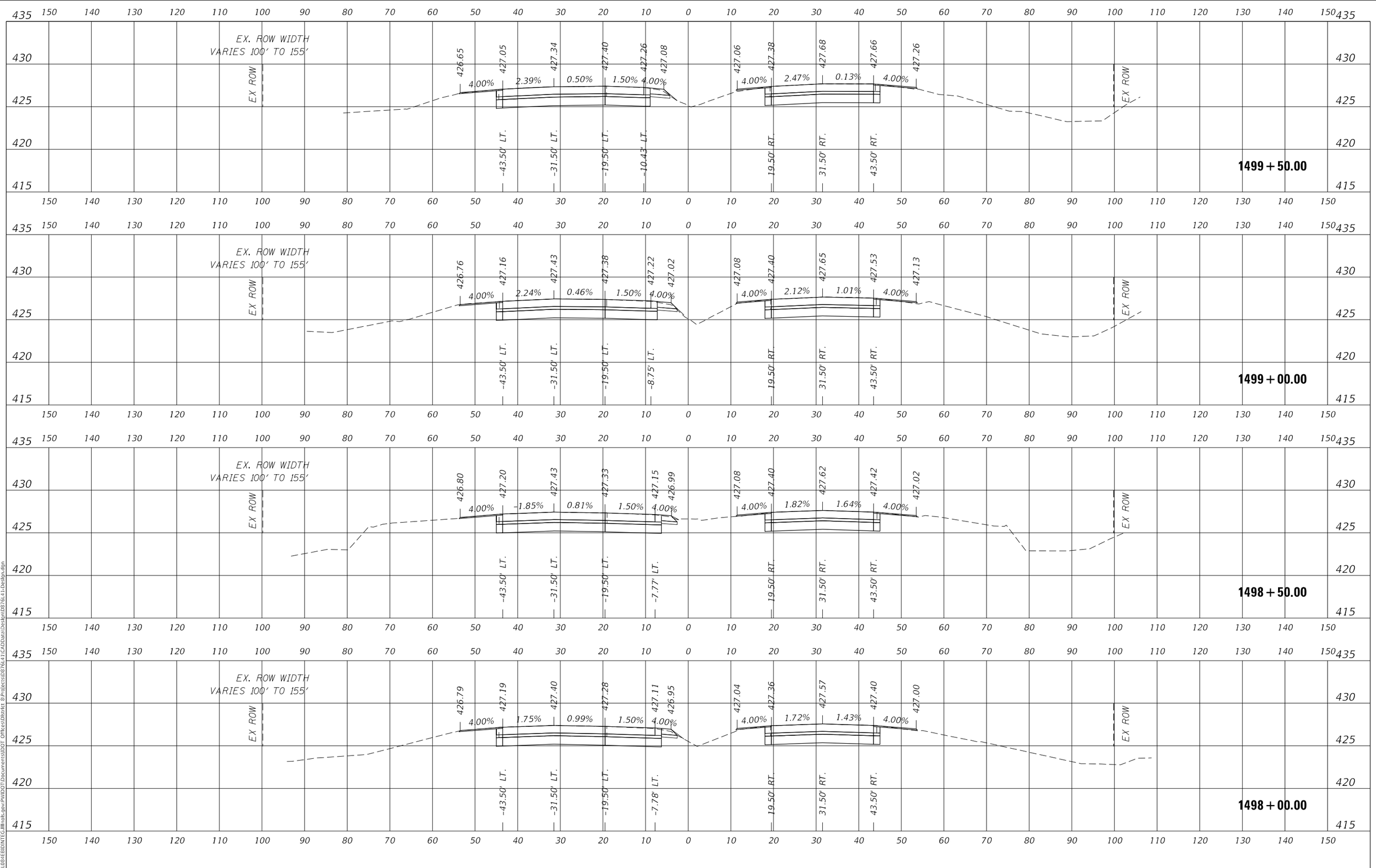

FINAL SURVEY	BY	DATE
SURVEYED IDOT	WEBER & DOWNING	DEC. 2012
PLOTTED		
TEMPLATE		
AREAS		
AREAS CHECKED		
NOTE BOOK NO.		

ORIGINAL SURVEY	BY	DATE
SURVEYED		
PLOTTED		
TEMPLATE		
AREAS		
AREAS CHECKED		
NOTE BOOK NO.		

MODEL: IL3_100
FILE NAME: pw:\\IL084EBIDINTEG.illinois.gov:PWIDOT\Documents\IDOT Offices\District 8\Projects\d876L41\CADData\Design\D876L41-Design.dgn

USER NAME = schweizerja	DESIGNED - JS	REVISED -
	DRAWN - JS	REVISED -
PLOT SCALE = 20.0000 ' / in.	CHECKED - DM	REVISED -
PLOT DATE = 8/10/2018	DATE -	REVISED -

STATE OF ILLINOIS
DEPARTMENT OF TRANSPORTATION

CROSS SECTION

SCALE: | SHEET 6 OF 8 SHEETS | STA. 1498+00.00 TO STA. 1499+50.00

F.A.P. RTE.	SECTION	COUNTY	TOTAL SHEETS	SHEET NO.
2	(101, 102) R - 5	MADISON	28	26

CONTRACT NO. 76L41

ILLINOIS | FED. AID PROJECT # NHPP-VPCQ(318)

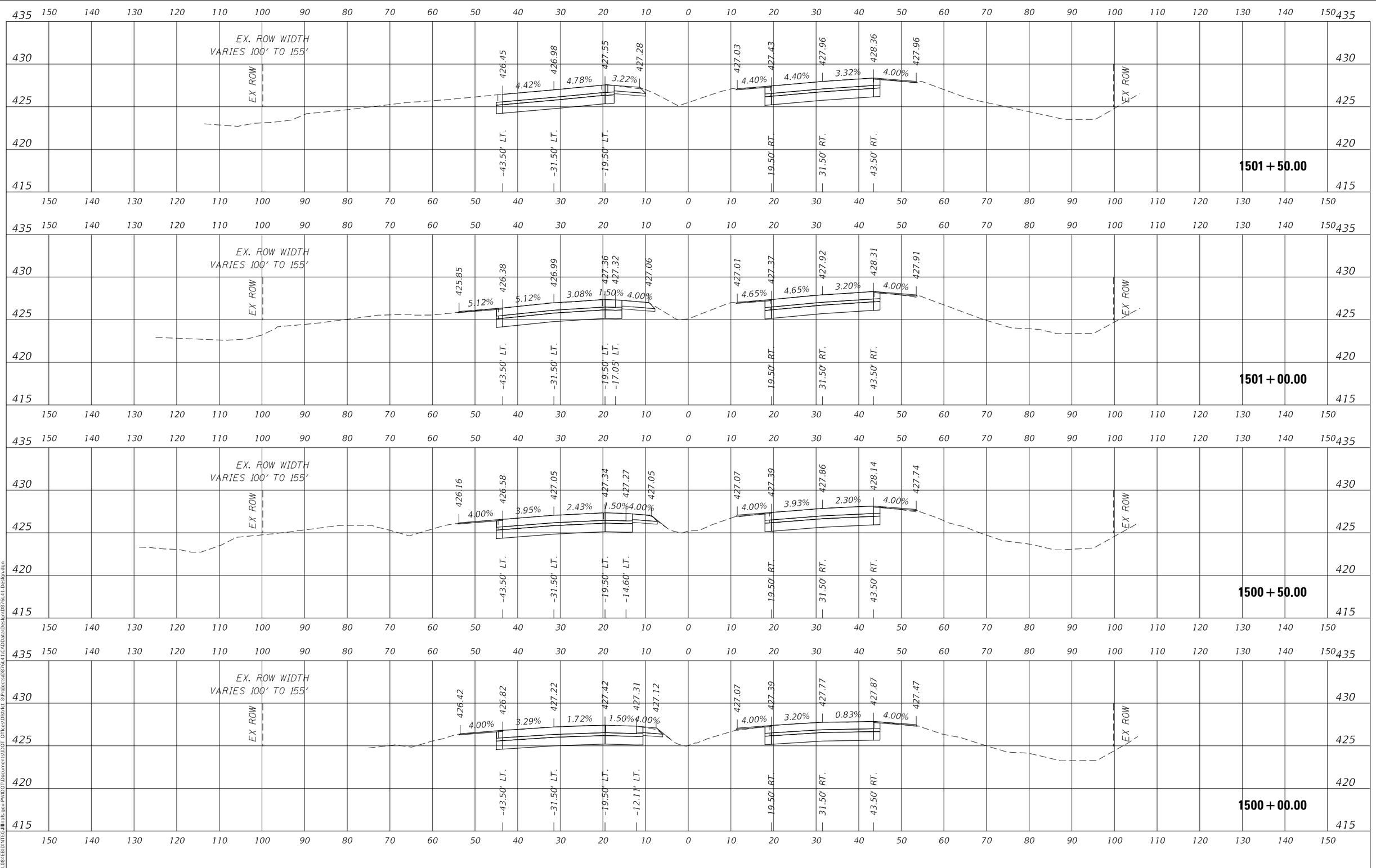

FINAL SURVEY	BY	DATE
SURVEYED IDOT	WEBER & DOWNING	DEC. 2012
PLOTTED		
TEMPLATE		
AREAS		
AREAS CHECKED		
NOTE BOOK		
NO.		

ORIGINAL SURVEY	BY	DATE
SURVEYED		
PLOTTED		
TEMPLATE		
AREAS		
AREAS CHECKED		
NOTE BOOK		
NO.		

MODEL: IL3_100
FILE NAME: pw:\\IL084EBIDINTEG.illinois.gov:PWIDOT\Documents\IDOT Offices\District 8\Projects\d876L41\CADData\Design\D876L41-Design.dgn

USER NAME = schweizerja	DESIGNED - JS	REVISED -
	DRAWN - JS	REVISED -
PLOT SCALE = 20.0000 ' / in.	CHECKED - DM	REVISED -
PLOT DATE = 8/10/2018	DATE -	REVISED -

STATE OF ILLINOIS
DEPARTMENT OF TRANSPORTATION

CROSS SECTION

SCALE: | SHEET 7 OF 8 SHEETS | STA. 1500+00.00 TO STA. 1501+50.00

F.A.P. RTE.	SECTION	COUNTY	TOTAL SHEETS	SHEET NO.
2	(101, 102) R - 5	MADISON	28	27

CONTRACT NO. 76L41

ILLINOIS | FED. AID PROJECT # NHPP-VPCQ(318)

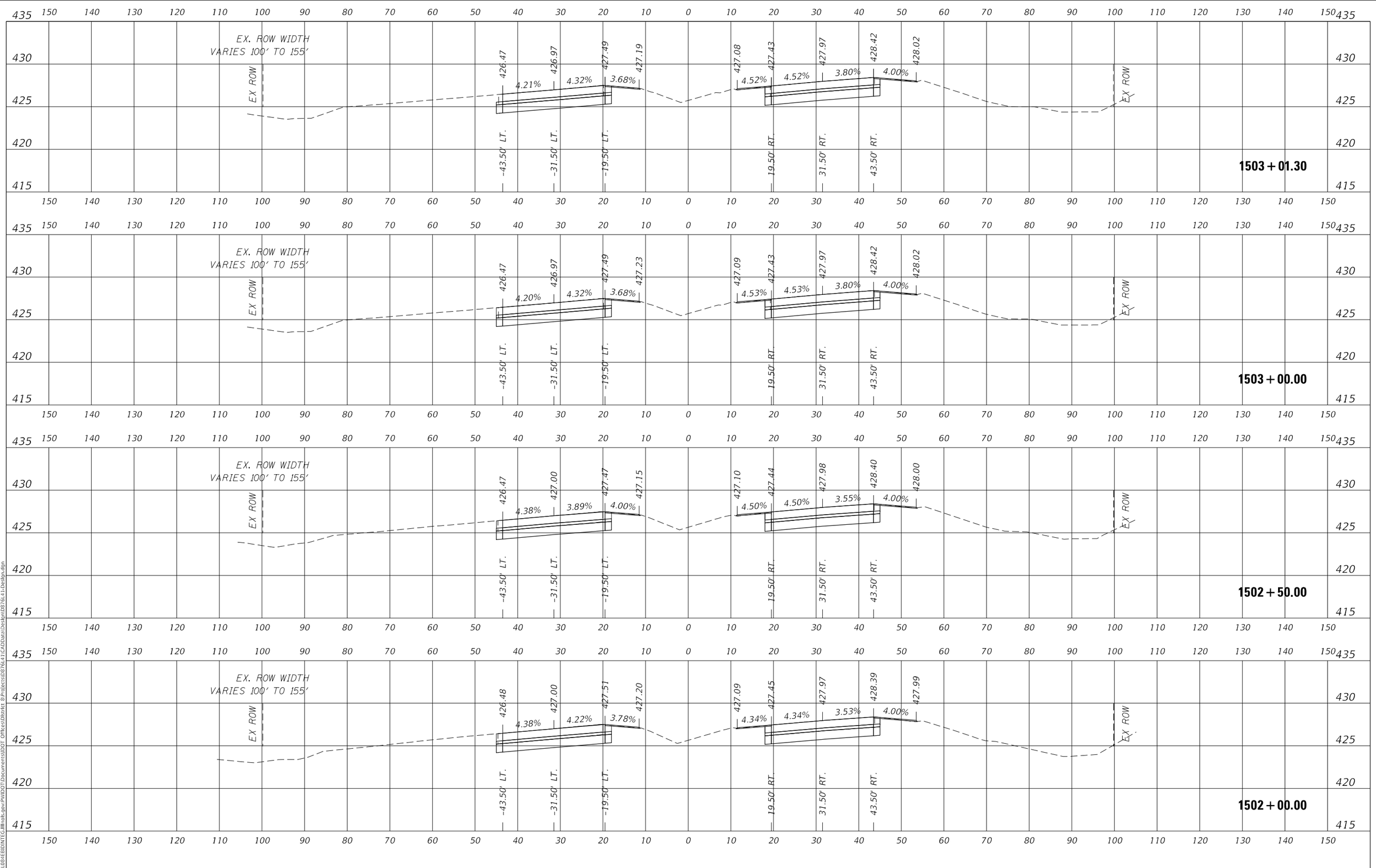

FINAL SURVEY	BY	DATE
SURVEYED IDOT	WEBER & DOWNING	DEC. 2012
PLOTTED		
TEMPLATE		
AREAS		
AREAS CHECKED		
NOTE BOOK		
NO.		

ORIGINAL SURVEY	BY	DATE
SURVEYED		
PLOTTED		
TEMPLATE		
AREAS		
AREAS CHECKED		
NOTE BOOK		
NO.		

MODEL: IL3_100
FILE NAME: pw:\\IL084EBIDINTEG.illinois.gov:PWIDOT\Documents\IDOT Offices\District 8\Projects\d876L41\CADData\Design\D876L41-Design.dgn

USER NAME = schweizerja	DESIGNED - JS	REVISED -	
	DRAWN - JS	REVISED -	
PLOT SCALE = 20.0000 ' / in.	CHECKED - DM	REVISED -	
PLOT DATE = 8/10/2018	DATE -	REVISED -	

STATE OF ILLINOIS
DEPARTMENT OF TRANSPORTATION

CROSS SECTION

SCALE: | SHEET 8 OF 8 SHEETS | STA. 1502+00.00 TO STA. 1503+01.30

F.A.P. RTE.	SECTION	COUNTY	TOTAL SHEETS	SHEET NO.
2	(101, 102) R - 5	MADISON	28	28
		CONTRACT NO. 76L41		
		ILLINOIS	FED. AID PROJECT # NHPP-VPCQ(318)	