GENERAL NOTES

GENERAL NOTES

(1) WHERE SECTION OR SUBSECTION MONUMENTS ARE ENCOUNTERED, THE ENGINEER SHALL BE NOTIFIED IN A TIMELY MANNER BEFORE SUCH MONUMENTS ARE REMOVED. THE CONTRACTOR SHALL PROTECT AND CAREFULLY PRESERVE ALL PROPERTY MARKERS AND MONUMENTS UNTIL THE OWNER, AN AUTHORIZED AGENT, OR LAND SURVEYOR HAS WITNESSED AND CROSS-TIED ITS LOCATION.

(2) THE NOMINAL THICKNESS FOR BASE AND SURFACE COURSES ARE SHOWN ON THE TYPICAL SECTIONS, STANDARDS, SCHEDULES, OR SPECIAL DETAILS. THE CONSTRUCTED THICKNESS OF THE ABOVE ITEM SHALL NOT BE LESS THAN 90 PERCENT OF THE NOMINAL THICKNESS AT ANY LOCATION.

(3) THE THICKNESS OF THE HMA MIXTURE SHOWN ON THE PLANS IS THE NOMINAL THICKNESS. DEVIATIONS FROM THE NOMINAL THICKNESS WILL BE PERMITTED WHEN SUCH DEVIATION OCCUR DUE TO IRREGULARITIES IN THE EXISTING SURFACE OR BASE ON WHICH THE HOT-MIX ASPHALT MIXTURE IS PLACED.

(4) ANY REFERENCE TO A STANDARD IN THE PLANS SHALL BE INTERPRETED TO MEAN THE EDITION, AS INDICATED BY THE SUB-NUMBER LISTED IN THE INDEX OF SHEETS.

(5) THE CONTRACTOR SHALL BE RESPONSIBLE FOR PROTECTING UTILITY PROPERTY FROM CONSTRUCTION OPERATIONS AS OUTLINED IN ARTICLE 107.31 OF THE STANDARD SPECIFICATIONS. THE JULIE NUMBER IS 800-892-0123. A MINIMUM OF FORTY-EIGHT HOURS ADVANCED NOTICE IS REQUIRED. ANY DAMAGE TO THE UNDERGROUND FACILITIES CAUSED BY THE CONTRACTOR SHALL BE REPAIRED TO THE SATISFACTION OF THE DEPARTMENT AT THE CONTRACTOR'S EXPENSE, INCLUDING TEMPORARY REPAIRS WHICH MAY BE REQUIRED TO KEEP THE FACILITY OPERATIONAL WHILE MATERIAL IS BEING OBTAINED TO MAKE PERMANENT REPAIRS.

(6) THE LOCATIONS OF THOSE BURIED AND ABOVE GROUND UTILITIES SHOWN ARE APPROXIMATE, ARE SHOWN FOR CONTRACTOR INFORMATIONAL USE ONLY, AND ARE NOT TO BE REFERENCED FOR CONSTRUCTION PURPOSES. THE IMPLIED PRESENCE OR ABSENCE OF UTILITIES IS NOT TO BE CONSTRUED BY THE OWNER, ENGINEER, CONTRACTOR OR SUBCONTRACTORS TO BE AN ACCURATE AND COMPLETE REPRESENTATION OF UTILITIES THAT MAY OR MAY NOT EXIST ON THE CONSTRUCTION SITE. BURIED AND ABOVE GROUND UTILITY LOCATIONS, IDENTIFICATION, AND MARKING ARE THE SOLE RESPONSIBILITY OF THE CONTRACTOR. REROUTING, DISCONNECTION, PROTECTION, ...ETC OF ANY UTILITIES MUST BE COORDINATED BETWEEN CONTRACTOR, UTILITY COMPANY, AND OWNER. SITE SAFETY, INCLUDING THE AVOIDANCE OF HAZARDOUS ASSOCIATED WITH BURIED AND ABOVE GROUND UTILITIES REMAIN THE SOLE RESPONSIBILITY OF THE CONTRACTOR.

(7) THE FOLLOWING MIXTURE REQUIREMENTS ARE APPLICABLE: 1

LOCATION(S):	IL 96	IL 96	IL 96	IL 96	IL 96	IL 96	Side Rds. & Entr.
MIXTURE USE(S):	HMA CONC SURF CSE	LEV BIND	PATCHING	HMA SHLDR (bottom lift)	HMA BC WID 10"	HMA SHLDR (top lift)	INCIDENTAL HMA SURF
AC/PG:	PG 64-22	PG 58-28	PG 64-22	PG 64-22	PG 64-22	PG 64-22	PG 64-22
DESIGN AIR VOIDS	4.0% @ N design = 50	4.0% @ N design = 50	4.0% @ N design = 50	4.0% @ N design = 50	4.0% @ N design = 50	4.0% @ N design = 50	4.0% @ N design = 50
MIXTURE COMPOSITION (Gradation Mixture)	IL 9.5	IL 9.5	IL 19.0	IL 19.0	IL 19.0	IL 9.5	IL 9.5
FRICTION AGGREGATE	MIX "C"	N/A	N/A	N/A	N/A	MIX "C"	MIX "C"
QUALITY MANAGEMENT	QPC	QPC (See NOTE)	QC/QA	QC/QA	QC/QA	QC/QA	QC/QA
SUBLOT SIZE	1,000 TONS	1,000 TONS	N/A	N/A	N/A	N/A	N/A

(8) IN ADDITION TO FIELD AND AERIAL SURVEYS, PLAN DIMENSIONS AND DETAILS RELATIVE TO THE EXISTING FACILITIES HAVE BEEN TAKEN FROM EXISTING PLANS AND ARE SUBJECT TO CONSTRUCTION VARIATIONS. IT SHALL BE THE CONTRACTOR'S RESPONSIBILITY TO VERIFY SUCH DIMENSIONS AND DETAILS IN THE FIELD. SUCH VARIATIONS SHALL NOT BE A CAUSE FOR ADDITIONAL COMPENSATION DUE TO A CHANGE IN THE SCOPE OF WORK. HOWEVER, THE CONTRACTOR WILL BE PAID FOR THE QUANTITY ACTUALLY FURNISHED AT THE UNIT PRICE BID FOR THE WORK.

(9) THE EXACT LOCATIONS AND SIZES OF PAVEMENT PATCHES SHALL BE DETERMINED BY THE ENGINEER IN THE FIELD.

(10) ACCESS TO ALL ENTRANCES AND SIDE ROADS SHALL BE MAINTAINED AT ALL TIMES.

(11) ALL SAW CUTS NECESSARY TO COMPLETE THE WORK DETAILED IN THE PLANS SHALL BE INCLUDED IN THE COST FOR THE VARIOUS PAY ITEMS INVOLVED AND SHALL BE IN ACCORDANCE WITH SECTION 440 OF THE STANDARD SPECIFICATIONS.

(12) UNLESS DIRECTED BY THE ENGINEER, PAVEMENT MARKING LINES SHALL NOT BE LAID DIRECTLY OVER A LONGITUDINAL CRACK OR JOINT NOR OVER A TAR OR ASPHALT PAINTED LINE. THE EDGE OF A CENTERLINE OR LANE LINE SHALL BE OFFSET A MINIMUM DISTANCE OF 2" FROM A LONGITUDINAL CRACK OR JOINT. EDGE LINES SHALL BE APPROXIMATELY 2" FROM THE EDGE OF PAVEMENT. SEE SECTION 780 OF THE STANDARD SPECIFICATIONS FOR TRAFFIC CONTROL ITEMS.

(13) THE APPROXIMATE AVERAGE THICKNESS OF 2 3/4" IS USED FOR CALCULATING THE QUANTITY FOR AGGREGATE WEDGE SHOULDERS, TYPE B.

(14) NO PASSING ZONES SHALL BE VERIFIED BY THE BUREAU OF OPERATIONS. THE RESIDENT ENGINEER SHALL NOTIFY THE DISTRICT 6 BUREAU OF OPERATIONS AT (217) 782-7314 AT LEAST 14 DAYS IN ADVANCES OF FINAL PAVEMENT MARKINGS.

(15) PROPOSED SUPERELEVATIONS SHOWN IN THE TYPICAL SECTIONS ARE REFERENCED FROM EXISTING PLANS AND SHALL MATCH EXISTING PAVEMENT GRADES AND TRANSITIONS, THE ENGINEER SHALL FIELD VERIFY ALL EXISTING SUPERELEVATIONS.

(16) ALL AGGREGATE SURFACE COURSE SHALL BE DETERMINED IN THE FIELD BY THE ENGINEER.

RATES OF APPLICATION TABLES

THE FOLLOWING RATES OF APPLICATION HAVE BEEN ASSUMED IN CALCULATING PLAN QUANTITIES.

BITUMINOUS MATERIALS (PRIME COAT): 0.05 LBS / SQ FT (FOR MILLING)
0.025 LBS / FT (FOR LIFTS)
HMA SURFACE MIX C / BINDER (112 LBS): 0.056 TON / SQ YD • in
AGGREGATE MATERIALS: 2.05 TON / CU YD

COMMITMENTS

THE RESIDENT ENGINEER SHALL CONTACT STUDIES AND PLANS CONCERNING ANY MAJOR PLAN CHANGE TO MAKE SURE NO PREVIOUS COMMENTS (NOT LISTED) WERE MADE AFFECTING THE DESIGN AND ALLOW AN IMPROVED DESIGN FOR FUTURE PROJECTS.

INDEX OF SHEETS

1	COVER SHEET
2	INDEX OF SHEETS, LISTS OF STANDARDS, GENERAL NOTES AND COMMITMENTS
3 - 9	SUMMARY OF QUANTITIES (7)
10 - 19	SCHEDULE OF QUANTITIES (10)
20 - 25	TYPICAL SECTIONS (6)
26	CROSS-TIES AND BENCH MARKS
27 - 38	PLAN SHEETS (12)
39 - 41	STAGE CONSTRUCTION PLAN SN: 001-0052 (3)
42 - 48	BRIDGE REPAIR PLANS SN: 001-0052 (7)
49 - 50	BRIDGE REPAIR PLANS SN: 001-0074 (2)
51	PIPE CULVERT REPAIR DETAILS SN: 001-7039
52 - 56	ADA SIDEWALK RAMP DETAILS (5)
57	SUPERELEVATION DETAIL
58 - 59	ENTRANCE AND SIDEROAD DETAILS (2)

STANDARDS

000001-06	STANDARD SYMBOLS, ABBREVIATIONS, AND PATTERNS
001001-02	AREAS OF REINFORCEMENT BARS
001006	DECIMAL OF AN INCH AND OF A FOOT
424001-10	PERPENDICULAR CURB RAMPS FOR SIDEWALKS
424006-03	DIAGONAL CURB RAMPS FOR SIDEWALKS
442201-03	CLASS C & D PATCHES
606001-07	CONCRETE CURB TYPE B AND COMBINATION CONCRETE CURB AND GUTTER
630001-12	STEEL PLATE BEAM GUARDRAIL
630301-08	SHOULDER WIDENING FOR TYPE 1 (SPECIAL) GUARDRAIL TERMINALS
631031-15	TRAFFIC BARRIER TERMINAL, TYPE 6
643001-02	SAND MODULE IMPACT ATTENUATORS
667101-02	PERMANENT SURVEY MARKER
701001-02	OFF-ROAD OPERATIONS, 2L, 2W, MORE THAN 15' (4.5 m) AWAY
701006-05	OFF-ROAD OPERATIONS, 2L, 2W, 15' (4.5 m) TO 24" (600 mm) FROM PAVEMENT EDGE
701201-04	LANE CLOSURE, 2L, 2W, DAY ONLY, FOR SPEEDS ≥ 45 MPH
701306-04	LANE CLOSURE, 2L, 2W, SLOW MOVING OPERATIONS ONLY, FOR SPEEDS ≥ 45 MPH
701311-03	LANE CLOSURE, 2L, 2W, MOVING OPERATIONS - DAY ONLY
701321-17	LANE CLOSURE, 2L, 2W, BRIDGE REPAIR WITH BARRIER
701326-04	LANE CLOSURE, 2L, 2W, PAVEMENT WIDENING, FOR SPEEDS ≥ 45 MPH
701336-06	LANE CLOSURE, 2L, 2W, WORK AREAS IN SERIES, FOR SPEEDS ≥ 45 MPH
701501-06	URBAN LANE CLOSURE, 2L, 2W, UNDIVIDED
701701-10	URBAN LANE CLOSURE, MULTILANE INTERSECTION
701801-06	SIDEWALK, CORNER, OR CROSSWALK CLOSURE
701901-07	TRAFFIC CONTROL DEVICES
704001-08	TEMPORARY CONCRETE BARRIER
780001-05	TYPICAL PAVEMENT MARKING
781001-04	TYPICAL APPLICATIONS OF RAISED REFLECTIVE PAVEMENT MARKINGS
782006	GUARDRAIL AND BARRIER WALL REFLECTOR MOUNTING DETAILS

DISTRICT SIX

EXAMINED February 16th 20 18
Wm. C. Wannigman
OPERATIONS ENGINEER

EXAMINED February 22nd 20 18
Susan A. Shaw
PROJECT IMPLEMENTATION ENGINEER

EXAMINED February 21 20 18
Anthony R. Mar
PROGRAM DEVELOPMENT ENGINEER

1 REV. 10-22-2018

USER NAME = cabrejars	DESIGNED - RSC	REVISED -	STATE OF ILLINOIS DEPARTMENT OF TRANSPORTATION
	DRAWN - RSC	REVISED -	
PLOT SCALE = 40.0000 ' / in.	CHECKED -	REVISED -	
PLOT DATE = 3/21/2018	DATE -	REVISED -	

INDEX OF SHEETS & GENERAL NOTES

SCALE: NTS | SHEET 1 OF 1 SHEETS | STA. TO STA.

F.A.P. RTE.	SECTION	COUNTY	TOTAL SHEETS	SHEET NO
506	(126)RS-3,BRR,BDR,BJR,SCR	ADAMS	59	2
		CONTRACT NO. 72C29		
		ILLINOIS FED. AID PROJECT		

CODE NO.	ITEM	UNIT	RURAL TOTAL QUANTITY	CONSTRUCTION CODE					
				6-00788-0000	6-00788-0200	6-00788-0200	6-00788-0200	6-00788-0200	6-00788-0200
				80 % FEDERAL 20 % STATE	80 % FEDERAL 20 % STATE	80 % FEDERAL 20 % STATE	80 % FEDERAL 20 % STATE	80 % FEDERAL 20 % STATE	80 % FEDERAL 20 % STATE
				ROADWAY	BRIDGE	BRIDGE	PIPE CULVERT	BOX CULVERT	BOX CULVERT
				0005	0059	0047	0004	0004	0004
				3P	001-0052	001-0074	001-7039	001-7038	001-7037
20200100	EARTH EXCAVATION	CU YD	214		110	104			
20200600	EXCAVATING AND GRADING EXISTING SHOULDER	UNIT	108	90	9	9			
20700110	POROUS GRANULAR EMBANKMENT	TON	8				8		
25000100	SEEDING, CLASS 1	ACRE	0.1	0.1					
25100115	MULCH, METHOD 2	ACRE	0.1	0.1					
28100707	STONE DUMPED RIPRAP, CLASS A4	SQ YD	413		173	138	69	11	22
28100709	STONE DUMPED RIPRAP, CLASS A5	SQ YD	128		128				
35600716	HOT-MIX ASPHALT BASE COURSE WIDENING, 10"	SQ YD	771		396	375			
40200800	AGGREGATE SURFACE COURSE, TYPE B	TON	58	58					
40600290	BITUMINOUS MATERIALS (TACK COAT)	POUND	50,163	50,163	1				
40600625	LEVELING BINDER (MACHINE METHOD), N50	TON	2,957	2,957					
~~40600627~~	~~LEVELING BINDER (MACHINE METHOD), IL 9.5FG, N50~~	~~TON~~	~~2,957~~	~~2,957~~					
40600982	HOT-MIX ASPHALT SURFACE REMOVAL - BUTT JOINT	SQ YD	2,819	2,819					
40600990	TEMPORARY RAMP	SQ YD	87	87					

1 REV. 10-22-2018

MODEL: Default
FILE NAME: pw:\\IL084EBIDINTEG.illinois.gov:PWIDOT\Documents\IDOT Offices\District 6\Projects\D672C29\CADData\CADsheets\D672C29-sht-SOQ.dgn

USER NAME = cabrerars	DESIGNED - RSC	REVISED -
	DRAWN - RSC	REVISED -
PLOT SCALE = 2.0000 ' / in.	CHECKED -	REVISED -
PLOT DATE = 3/17/2018	DATE -	REVISED -

STATE OF ILLINOIS
DEPARTMENT OF TRANSPORTATION

SUMMARY OF QUANTITES

SCALE: NTS | SHEET 1 OF 7 SHEETS | STA. TO STA.

F.A.P. RTE.	SECTION	COUNTY	TOTAL SHEETS	SHEET NO.
506	(126)RS-3,BRR,BDR,BJR,SCR	ADAMS	59	3

CONTRACT NO. 72C29

ILLINOIS | FED. AID PROJECT

CODE NO.	ITEM	UNIT	TOTAL QUANTITY	CONSTRUCTION CODE					
				6-00788-0000	6-00788-0200	6-00788-0200	6-00788-0200	6-00788-0200	6-00788-0200
			RURAL	80 % FEDERAL 20 % STATE	80 % FEDERAL 20 % STATE	80 % FEDERAL 20 % STATE	80 % FEDERAL 20 % STATE	80 % FEDERAL 20 % STATE	80 % FEDERAL 20 % STATE
				ROADWAY	BRIDGE	BRIDGE	PIPE CULVERT	BOX CULVERT	BOX CULVERT
				0005	0059	0047	0004	0004	0004
				3P	001-0052	001-0074	001-7039	001-7038	001-7037
70102635	TRAFFIC CONTROL AND PROTECTION, STANDARD 701701	L SUM	1	1					
70102640	TRAFFIC CONTROL AND PROTECTION, STANDARD 701801	L SUM	1	1					
70103815	TRAFFIC CONTROL SURVEILLANCE	CAL DAY	15	15					
70106500	TEMPORARY BRIDGE TRAFFIC SIGNALS	EACH	1		1				
70106700	TEMPORARY RUMBLE STRIPS	EACH	12		12				
70300100	SHORT TERM PAVEMENT MARKING	FOOT	7,136	7,136					
70300150	SHORT TERM PAVEMENT MARKING REMOVAL	SQ FT	793	793					
70300230	TEMPORARY PAVEMENT MARKING - LINE 5"	FOOT	78,696	78,696					
70400100	TEMPORARY CONCRETE BARRIER	FOOT	537.5		537.5				
70400200	RELOCATE TEMPORARY CONCRETE BARRIER	FOOT	537.5		537.5				
70500100	TEMPORARY STEEL PLATE BEAM GUARDRAIL, TYPE A	FOOT	112.5				112.5		
								1	
~~70500615~~	~~TEMPORARY TRAFFIC BARRIER TERMINAL, TYPE 1~~	~~EACH~~	~~1~~				~~1~~		
70600260	IMPACT ATTENUATORS, TEMPORARY (FULLY REDIRECTIVE, NARROW), TEST LEVEL 3	EACH	2		2				
70600330	IMPACT ATTENUATORS, RELOCATE (FULLY REDIRECTIVE), TEST LEVEL 3	EACH	2		2				

1 REV. 10-22-2018

MODEL: Default
FILE NAME: pw:\\IL084EBIDINTEG.illinois.gov:PWIDOT\Documents\IDOT Offices\District 6\Projects\D672C29\CADData\CADsheets\D672C29-sht-SOQ.dgn

USER NAME = cabrerars	DESIGNED - RSC	REVISED -	
	DRAWN - RSC	REVISED -	
PLOT SCALE = 2.0000 ' / in.	CHECKED -	REVISED -	
PLOT DATE = 3/17/2018	DATE -	REVISED -	

STATE OF ILLINOIS
DEPARTMENT OF TRANSPORTATION

SUMMARY OF QUANTITES

SCALE: NTS | SHEET 5 OF 7 SHEETS | STA. TO STA.

F.A.P. RTE.	SECTION	COUNTY	TOTAL SHEETS	SHEET NO.
506	(126)RS-3,BRR,BDR,BJR,SCR	ADAMS	59	7

CONTRACT NO. 72C29

ILLINOIS | FED. AID PROJECT

	CODE NO.	ITEM	UNIT	RURAL TOTAL QUANTITY	CONSTRUCTION CODE					
					6-00788-0000	6-00788-0200	6-00788-0200	6-00788-0200	6-00788-0200	6-00788-0200
					80 % FEDERAL 20 % STATE	80 % FEDERAL 20 % STATE	80 % FEDERAL 20 % STATE	80 % FEDERAL 20 % STATE	80 % FEDERAL 20 % STATE	80 % FEDERAL 20 % STATE
					ROADWAY	BRIDGE	BRIDGE	PIPE CULVERT	BOX CULVERT	BOX CULVERT
					0005	0059	0047	0004	0004	0004
					3P	001-0052	001-0074	001-7039	001-7038	001-7037
*	72501000	TERMINAL MARKER - DIRECT APPLIED	EACH	8		4	4			
*	78001120	PAINT PAVEMENT MARKING - LINE 5"	FOOT	78,696	78,696					
*	78100100	RAISED REFLECTIVE PAVEMENT MARKER	EACH	301	301					
*	78200005	GUARDRAIL REFLECTORS, TYPE A	EACH	20		9	11			
	78300200	RAISED REFLECTIVE PAVEMENT MARKER REMOVAL	EACH	301	301					
	X0322469	PLUG EXISTING FLOOR DRAINS	EACH	62		62				
	X0327979	PAVEMENT MARKING REMOVAL - GRINDING	SQ FT	314		314				
	X5000015	REMOVE AND RE-INSTALL PIPE CULVERTS	FOOT	17				17		
	X6670105	PERMANENT SURVEY MARKERS (SPECIAL)	EACH	20	20			1		
	X7050167	TEMPORARY TRAFFIC BARRIER TERMINAL, TYPE 1, SPECIAL (TANGENT)	EACH	1				1		
	X7050169	TEMPORARY TRAFFIC BARRIER TERMINAL, TYPE 1, SPECIAL (FLARED)	EACH	1				1		
	X7200201	WIDTH RESTRICTION SIGNING	L SUM	1		1				
	Z0012130	BRIDGE DECK SCARIFICATION 3/4"	SQ YD	1,007		1,007				
	Z0012164	BRIDGE DECK MICROSILICA CONCRETE OVERLAY 2 1/2"	SQ YD	1,007		1,007				
	Z0016001	DECK SLAB REPAIR (FULL DEPTH, TYPE I)	SQ YD	4		4				
	Z0016002	DECK SLAB REPAIR (FULL DEPTH, TYPE II)	SQ YD	8		8				

* SPECIALTY ITEM

1 REV. 10-22-2018

MODEL: Default
FILE NAME: pw:\\IL084EBIDINTEG.illinois.gov:PWIDOT\Documents\IDOT Offices\District 6\Projects\D672C29\CADData\CADsheets\D672C29-sht-SOQ.dgn

USER NAME = cabrerars	DESIGNED - RSC	REVISED -	
	DRAWN - RSC	REVISED -	
PLOT SCALE = 2.0000 ' / in.	CHECKED -	REVISED -	
PLOT DATE = 3/20/2018	DATE -	REVISED -	

STATE OF ILLINOIS
DEPARTMENT OF TRANSPORTATION

SUMMARY OF QUANTITES

SCALE: NTS | SHEET 6 OF 7 SHEETS | STA. TO STA.

F.A.P. RTE.	SECTION	COUNTY	TOTAL SHEETS	SHEET NO.
506	(126)RS-3,BRR,BDR,BJR,SCR	ADAMS	59	8

CONTRACT NO. 72C29

ILLINOIS | FED. AID PROJECT

PAVEMENT SCHEDULE

TYP SEC #	LOCATION (STA TO STA)	LENGTH (FOOT)	PAVT WIDTH (FOOT)	LEVELING BINDER THICKNESS (INCH)	HMA SURF THICKNESS (INCH)	HMA SURF CSE "C" N50 (TON)	LONG JOINT SEALANT (FOOT)	LEV BIND MM N50 (TON)	HMA BASE CSE WID 10" (SQ YD)	HMA SHLDRS 6 1/2" (SQ YD)	HMA SHLDRS Width = 4' (TONS)	BIT MATLS TACK CT MILLING (POUND)	BIT MATLS TACK CT LIFTS (POUND)
	[F.A.P. 506 (IL 96)]	-	-	-	-	-	-	-	-	-	-	-	-
(1)	10+60.00 TO 10+75.00	15.0	26	0.375	-	-	-	0.91	-	-	-	-	-
(1)	10+60.00 TO 12+80.50	220.50	26	-	1.5	53.51	220.50	-	-	-	-	286.65	143.33
(1)	10+75.00 TO 12+65.50	190.50	26	0.75	-	-	-	23.11	-	-	-	-	-
	(HMA BC WD AREA)	-	-	-	-	-	-	-	-	-	-	-	-
(1)	10+75.00 TO 12+80.50	205.50	(4)(2)	-	1.5	-	-	-	182.67	-	23.02	82.20	41.10
(1)	12+65.50 TO 12+80.50	15.0	26	0.375	-	-	-	0.91	-	-	-	-	-
	(BRIDGE REPAIR) (SN: 001-0052) (BEAR CREEK) 12+80.50 TO 15+79.57												
	(HMA BC WD AREA)	-	-	-	-	-	-	-	-	-	-	-	-
(2)	15+79.57 TO 18+20.00	240.43	(4)(2)	-	1.5	-	-	-	213.72	-	26.93	96.17	48.09
(2-3)	15+79.57 TO 57+10.45	4,130.88	26	-	1.5	1,002.43	4,130.88	-	-	-	-	5,370.14	2,685.07
(2)	15+79.57 TO 15+94.57	15.0	26	0.375	-	-	-	0.91	-	-	-	-	-
(2-3)	15+94.57 TO 57+10.45	4,115.88	26	0.75	-	-	-	499.39	-	-	-	-	-
	(HMA SHLDR AREA)	-	-	-	-	-	-	-	-	-	-	-	-
(2-3)	18+20.00 TO 57+10.45	3,890.45	(4)(2)	-	1.5	-	-	-	-	3,458.18	290.49	-	778.09
	(STA EQN) 57+10.45 (BK) = 270+22.19 (AH)												
	(HMA SHLDR AREA)	-	-	-	-	-	-	-	-	-	-	-	-
(4)	270+22.19 TO 276+28.00	605.81	(4)(2)	-	1.5	-	-	-	-	538.50	45.23	-	121.16
(4-5)	270+22.19 TO 295+35.94	2,513.75	26	0.75	-	-	-	305.00	-	-	-	-	-
(4-5)	270+22.19 TO 295+50.94	2,528.75	26	-	1.5	613.64	2,528.75	-	-	-	-	3,287.38	1,643.69
(5)	295+35.94 TO 295+50.94	15.0	26	0.375	-	-	-	0.91	-	-	-	-	-
	(HMA BC WD AREA)	-	-	-	-	-	-	-	-	-	-	-	-
(5)	292+80.00 TO 295+50.94	270.94	(4)(2)	-	1.5	-	-	-	240.84	-	30.35	108.38	54.19
	(BRIDGE REPAIR) (SN: 001-0074) (WHITE OAK CREEK) 295+50.94 TO 296+84.17												
(6)	296+84.17 TO 296+99.17	15.0	26	0.375	-	-	-	0.91	-	-	-	-	-
	(HMA BC WD AREA)	-	-	-	-	-	-	-	-	-	-	-	-
(6)	296+84.17 TO 298+35.00	150.83	(4)(2)	-	1.5	-	-	-	134.07	-	16.89	60.33	30.17
(6-7)	296+84.17 TO 351+44.20	5,460.03	26	-	1.5	1,324.97	5,460.03	-	-	-	-	7,098.04	3,549.02
(6-7)	296+99.17 TO 351+44.20	5,445.03	26	0.75	-	-	-	660.66	-	-	-	-	-
(8-9)	351+44.20 TO 358+62.70	718.50	33	0.75	1.5	221.30	718.50	110.65	-	-	-	1,185.53	592.76
(10-15)	358+62.70 TO 389+20.70	3,058.00	26	0.75	1.5	742.07	3,058.00	371.04	-	-	-	3,975.40	1,987.70
(16)	389+20.70 TO 389+82.20	61.50	27.5	0.75	1.5	15.79	61.50	7.89	-	-	-	84.56	42.28
(16)	389+82.20 TO 389+92.80	10.60	29	0.75	1.5	2.87	10.60	1.43	-	-	-	15.37	7.69
(16)	389+92.80 TO 390+45.80	53.00	30.5	0.75	1.5	15.09	53.00	7.54	-	-	-	80.83	40.41
(16)	390+45.80 TO 405+94.60	1,548.80	32	0.75	1.5	462.57	1,548.80	231.29	-	-	-	2,478.08	1,239.04
(17)	405+94.60 TO 411+75.60	581.00	29	0.75	1.5	157.26	581.00	78.63	-	-	-	842.45	421.23
(18)	411+75.60 TO 465+75.00	5,399.40	26	0.75	-	-	-	655.13	-	-	-	-	-
(18)	411+75.60 TO 465+90.00	5,414.40	26	-	1.5	1,313.89	5,414.40	-	-	-	-	7,038.72	3,519.36
(18)	465+75.00 TO 465+90.00	15.0	26	0.375	-	-	-	0.91	-	-	-	-	-
		-	-	-	-	-	-	-	-	-	-	-	-
SUBTOTALS						-	-	-	-	-	-	32,090.22	16,944.36
PROJECT TOTAL (3P)						5,926	23,786	2,957	771	3,997	433	49,035	✳✳ SEE NOTE

✳✳ ***NOTE:*** (fr INCIDENTAL HMA SURF SCHEDULE = 1,128 LBS) (REFER TO SHEETS 14 & 15)

1 REV. 10-22-2018

USER NAME = cabrerars	DESIGNED - RSC	REVISED -
	DRAWN - RSC	REVISED -
PLOT SCALE = 100.0000 ' / in.	CHECKED -	REVISED -
PLOT DATE = 10/3/2018	DATE -	REVISED -

STATE OF ILLINOIS
DEPARTMENT OF TRANSPORTATION

SCHEDULE OF QUANTITIES

SCALE: NTS | SHEET 3 OF 10 SHEETS | STA. 10+60.00 TO STA. 465+90.00

F.A.P. RTE.	SECTION	COUNTY	TOTAL SHEETS	SHEET NO.
506	(126)RS-3,BRR,BDR,BJR,SCR	ADAMS	59	12
		CONTRACT NO. 72C29		
	ILLINOIS	FED. AID PROJECT		

(126)RS-3,BRR,BDR,BJR,SCR

MODEL: Default
FILE NAME: pw:\\IL084EBIDINTEG.illinois.gov:PWIDOT\Documents\IDOT Offices\District 6\Projects\D672C29\CADdata\CADsheets\D672C29-sht-schedule.dgn

REMOVING INLETS

LOCATION	QUANTITY (EACH)
	-
[F.A.P. 506 (IL 96)]	-
Turtle St. Intrsctn / NE Quad	1
	-
PROJECT TOTAL (3P)	1

STORM SEWER REMOVAL, 12"

LOCATION	QUANTITY (FOOT)
	-
[F.A.P. 506 (IL 96)]	-
Turtle St. Intrsctn / NE Quad	32.0
	-
PROJECT TOTAL (3P)	32

FRAME AND GRATES TO BE ADJUSTED

LOCATION	QUANTITY (EACH)
	-
[F.A.P. 506 (IL 96)]	-
W. Main St. Intrsctn / NW Quad	1
	-
PROJECT TOTAL (3P)	1

HANDICAP RAMP SCHEDULE

LOCATION (HANDICAP RAMPS)	SIDEWALK REMOVAL (SQ FT)	CC&G REMOVAL (FOOT)	DETECTABLE WARNINGS (SQ FT)	PCC SIDEWALK 4 INCH (SQ FT)	COMB CC&G TB6.24 (FOOT)
	-	-	-	-	-
[F.A.P. 506 (IL 96)]	-	-	-	-	-
(LIMA)	-	-	-	-	-
(STREET "A" - STA 377+25.50 RT)	-	-	-	-	-
NE QUAD	112.45	13.62	10	143.83	13.62
	-	-	-	-	-
(N 2850th AVE. / W. MEYER RD.)	-	-	-	-	-
(STA 382+79.29 LT)	-	-	-	-	-
SW QUAD	100.19	19.98	12.48	125.61	19.98
NW QUAD	166.17	18.51	10	193.18	18.51
	-	-	-	-	-
(N 2850th AVE. / TURTLE ST.)	-	-	-	-	-
(STA 385+43.38 RT)	-	-	-	-	-
SE QUAD	254.72	21.50	15.43	368.32	21.50
NE QUAD	409.25	40.00	13.15	517.98	40.00
	-	-	-	-	-
(W. JEFFERSON ST. - STA 394+00.00 LT)	-	-	-	-	-
SW QUAD	72.02	14.18	10	80.49	14.18
NW QUAD	84.71	17.75	10	87.23	17.75
	-	-	-	-	-
(W. MAIN ST. / STA 397+39.59 LT)	-	-	-	-	-
SW QUAD	176.93	32.41	20	218.12	32.41
NW QUAD	122.54	33.51	18	124.19	33.51
	-	-	-	-	-
PROJECT TOTAL	1,499	212	119	1,859	212

TEMPORARY GUARDRAIL SCHEDULE 1

LOCATION	LENGTH (FOOT)	TEMP TRBT T1 SPL TAN (EACH)	TEMP SPBGR TA (FOOT)	TEMP TRBT T1 SPL FLAR (EACH)
	-	-	-	-
[F.A.P. 506 (IL 96)]	-	-	-	-
346+60.00 TO 347+10.00 LT	50.0	1	-	-
347+10.00 TO 348+22.50 LT	112.5	-	112.5	-
348+22.50 TO 348+72.50 LT	50.0	-	-	1
	-	-	-	-
PROJECT TOTAL (SN 001-7039)		1	112.5	1

1 REV. 10-22-2018

MODEL: Default
FILE NAME: pw:\\IL084EBIDINTEG.illinois.gov:PWIDOT\Documents\IDOT Offices\District 6\Projects\D672C29\CADData\CADsheets\D672C29-sht-schedule.dgn

USER NAME = cabrerars	DESIGNED - RSC	REVISED -	
	DRAWN - RSC	REVISED -	
PLOT SCALE = 100.0000 ' / in.	CHECKED -	REVISED -	
PLOT DATE = 3/17/2018	DATE -	REVISED -	

STATE OF ILLINOIS
DEPARTMENT OF TRANSPORTATION

SCHEDULE OF QUANTITIES

SCALE: NTS | SHEET 7 OF 10 SHEETS | STA. TO STA.

F.A.P. RTE.	SECTION	COUNTY	TOTAL SHEETS	SHEET NO.
506	(126)RS-3,BRR,BDR,BJR,SCR	ADAMS	59	16
		CONTRACT NO. 72C29		
		ILLINOIS FED. AID PROJECT		

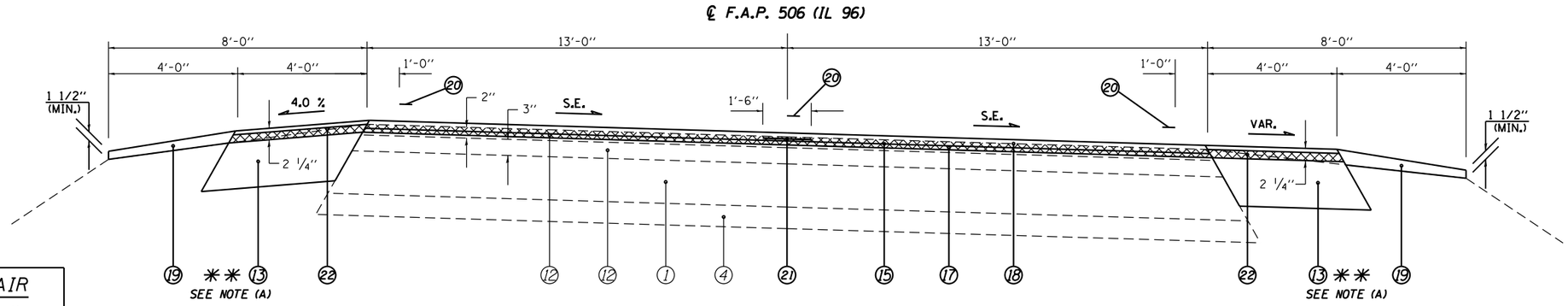

BRIDGE REPAIR
S.N.: 001-0052
(over BEAR CREEK)
STA 12+80.50 TO
STA 15+79.57

(1) STA 10+75.00 TO STA 12+65.00 [165.0']

(2) STA 15+94.57 TO STA 31+13.24 [1,518.67'] ✳✳ SEE NOTE (A)

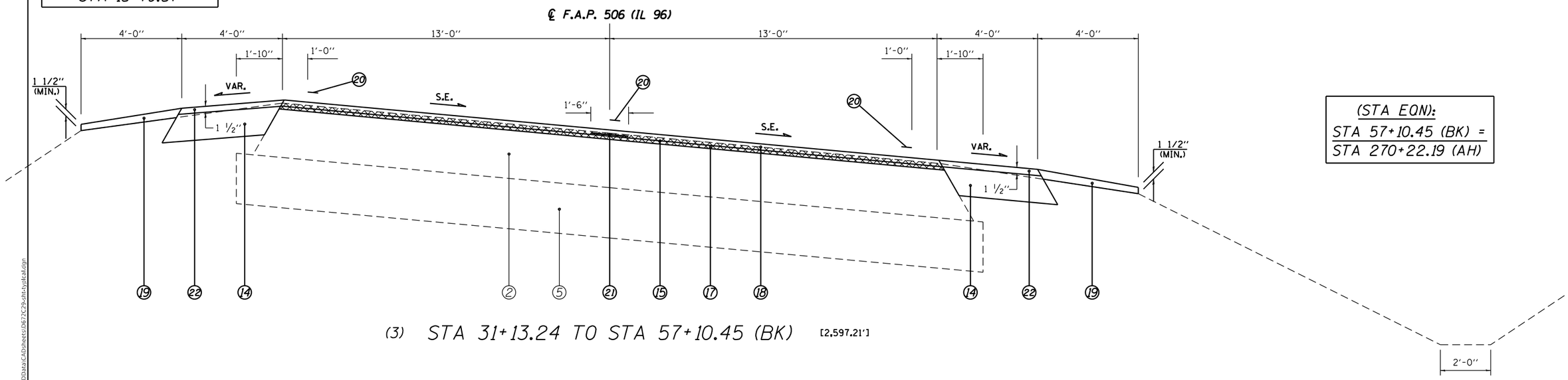

(STA EQN):
STA 57+10.45 (BK) =
STA 270+22.19 (AH)

(3) STA 31+13.24 TO STA 57+10.45 (BK) [2,597.21']

LEGEND

1. EXIST. BITUMINOUS BASE COURSE, 8"
2. EXIST. BITUMINOUS CONCRETE PAVEMENT, TYPE 2 13"
3. EXIST. PCC PAVEMENT 9"-6"-9"
4. EXIST. SUB-BASE GRANULAR MATERIAL, 4"
5. EXIST. SUB-BASE GRANULAR, TYPE A 12"
6. EXIST. ROCKFILL
7. EXIST. BITUMINOUS CONCRETE BINDER COURSE, 13 1/2" & VAR.
8. EXIST. PIPE UNDERDRAINS FABRIC LINED TRENCH 4"
9. EXIST. BITUMINOUS SHOULDERS, 8"
10. EXIST. CONCRETE GUTTER, TYPE A
11. EXIST. COMB. CONCRETE CURB AND GUTTER, TYPE B-6.24
12. EXIST. BITUMINOUS OVERLAY
13. PROP. HOT-MIX ASPHALT BASE COURSE WIDENING, 10"
14. PROP. HOT-MIX ASPHALT SHOULDERS, 6 1/2" (SQ YD)
15. PROP. HOT-MIX ASPHALT SURFACE REMOVAL, 1 1/2"
16. PROP. HOT-MIX ASPHALT SURFACE REMOVAL, 2 1/4"
17. PROP. LEVELING BINDER (MACHINE METHOD), N50 3/4" △1
18. PROP. HOT-MIX ASPHALT SURFACE COURSE, MIX C, N50 1 1/2"
19. PROP. AGGREGATE WEDGE SHOULDER, TYPE B
20. PROP. PAINT PAVEMENT MARKING - LINE 5"
21. PROP. LONGITUDINAL JOINT SEALANT (INSTALLED BETWEEN LEV BIND & SURF)
22. PROP. HMA SHOULDERS (TONS)

✳✳ NOTE:

(A) HMA BC WID. 10" ENDS AND HMA SHOULDERS, 6 1/2" BEGINS AT STA. 18+20.00 LT & RT.

△1 REV. 10-22-2018

MODEL: Default
FILE NAME: pw:\\IL084EBIDINTEG.illinois.gov:PWIDOT\Documents\IDOT Offices\District 6\Projects\D672C29\CADData\CADsheets\D672C29-sht-typical.dgn

USER NAME = cabrerars	DESIGNED - RSC	REVISED -	STATE OF ILLINOIS DEPARTMENT OF TRANSPORTATION
	DRAWN - RSC	REVISED -	
PLOT SCALE = 100.0000 ' / in.	CHECKED -	REVISED -	
PLOT DATE = 10/3/2018	DATE -	REVISED -	

TYPICAL SECTIONS

SCALE: NTS | SHEET 1 OF 6 SHEETS | STA. 10+75.00 TO STA. 57+10.45

F.A.P. RTE.	SECTION	COUNTY	TOTAL SHEETS	SHEET NO.
506	*	ADAMS	59	20
		CONTRACT NO. 72C29		
		ILLINOIS FED. AID PROJECT		

(126)RS-3,BRR,BDR,BJR,SCR

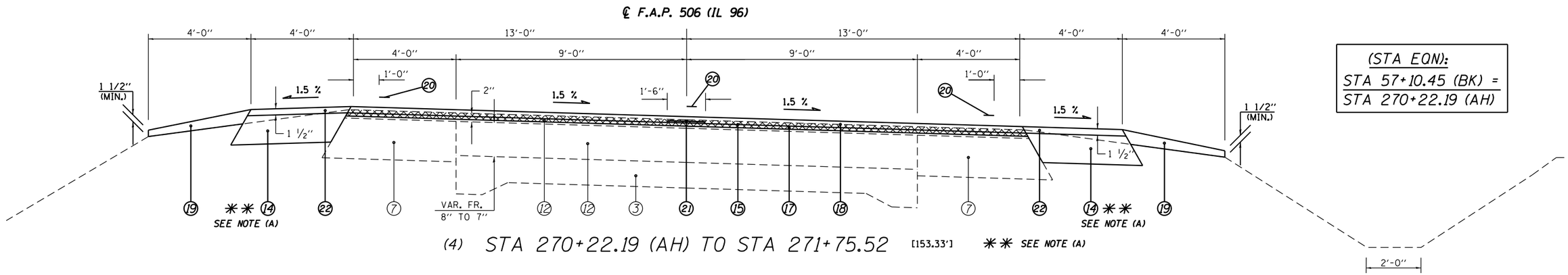

(4) STA 270+22.19 (AH) TO STA 271+75.52 [153.33'] ✳✳ SEE NOTE (A)

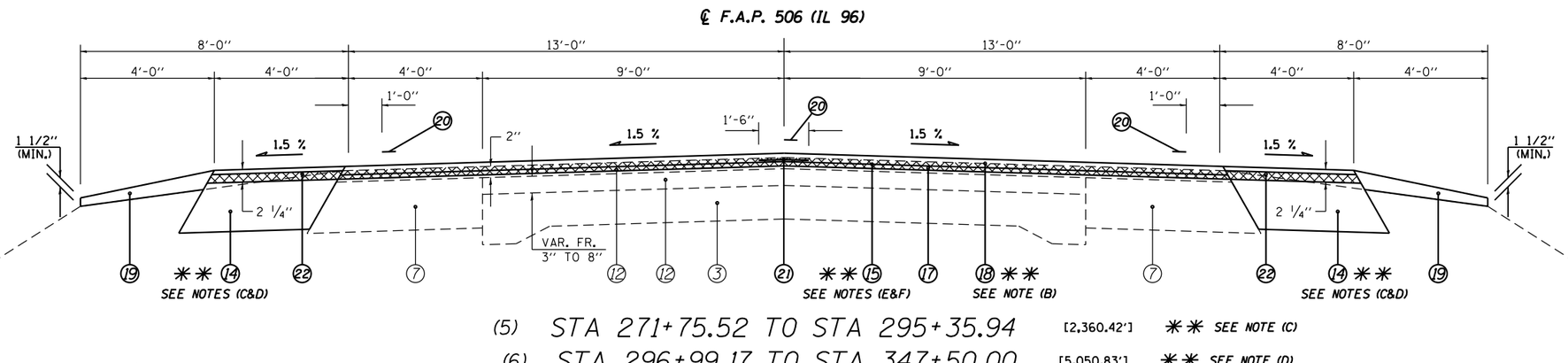

(5) STA 271+75.52 TO STA 295+35.94 [2,360.42'] ✳✳ SEE NOTE (C)

(6) STA 296+99.17 TO STA 347+50.00 [5,050.83'] ✳✳ SEE NOTE (D)

(STA EQN):
STA 57+10.45 (BK) =
STA 270+22.19 (AH)

BRIDGE REPAIR
S.N.: 001-0074
(over WHITE OAK CREEK)
STA 295+50.94 TO
STA 296+84.17

LEGEND

1. EXIST. BITUMINOUS BASE COURSE, 8"
2. EXIST. BITUMINOUS CONCRETE PAVEMENT, TYPE 2 13"
3. EXIST. PCC PAVEMENT 9"-6"-9"
4. EXIST. SUB-BASE GRANULAR MATERIAL, 4"
5. EXIST. SUB-BASE GRANULAR, TYPE A 12"
6. EXIST. ROCKFILL
7. EXIST. BITUMINOUS CONCRETE BINDER COURSE, 13 1/2" & VAR.
8. EXIST. PIPE UNDERDRAINS FABRIC LINED TRENCH 4"
9. EXIST. BITUMINOUS SHOULDERS, 8"
10. EXIST. CONCRETE GUTTER, TYPE A
11. EXIST. COMB. CONCRETE CURB AND GUTTER, TYPE B-6.24
12. EXIST. BITUMINOUS OVERLAY
13. PROP. HOT-MIX ASPHALT BASE COURSE WIDENING, 10"
14. PROP. HOT-MIX ASPHALT SHOULDERS, 6 1/2" (SQ YD)
15. PROP. HOT-MIX ASPHALT SURFACE REMOVAL, 1 1/2"
16. PROP. HOT-MIX ASPHALT SURFACE REMOVAL, 2 1/4" △1
17. PROP. LEVELING BINDER (MACHINE METHOD), N50 3/4"
18. PROP. HOT-MIX ASPHALT SURFACE COURSE, MIX C, N50 1 1/2"
19. PROP. AGGREGATE WEDGE SHOULDER, TYPE B
20. PROP. PAINT PAVEMENT MARKING - LINE 5"
21. PROP. LONGITUDINAL JOINT SEALANT (INSTALLED BETWEEN LEV BIND & SURF)
22. PROP. HMA SHOULDERS (TONS)

✳✳ NOTE:

(A) HMA SHLDR, 6 1/2" ENDS AT STA. 276+28.00 LT & RT.

(B) ROCKFILL LOCATED UNDER APPROACH SLABS
STA. 281+60.00 TO STA. 286+25.00, LT - STA. 286+40.00, RT
STA. 291+15.00 TO STA. 295+98.00, RT & LT
STA. 296+40.00 TO STA. 310+15.00 LT - 310+25.00 RT

(C) HMA BC WID. 10" FR. STA. 292+80.00 TO 295+50.94 LT & RT

(D) HMA BC WID. 10" FR. STA. 296+84.17 TO 298+35.00 LT & RT

△1 REV. 10-22-2018

MODEL: Default
FILE NAME: pw:\\IL084EBIDINTEG.illinois.gov:PWIDOT\Documents\IDOT Offices\District 6\Projects\D672C29\CADData\CADsheets\D672C29-sht-typtlcal.dgn

USER NAME = cabrerars	DESIGNED - RSC	REVISED -	STATE OF ILLINOIS DEPARTMENT OF TRANSPORTATION
	DRAWN - RSC	REVISED -	
PLOT SCALE = 100.0000 ' / in.	CHECKED -	REVISED -	
PLOT DATE = 10/3/2018	DATE -	REVISED -	

TYPICAL SECTIONS

SCALE: NTS | SHEET 2 OF 6 SHEETS | STA. 270+22.19 TO STA. 347+50.00

F.A.P. RTE.	SECTION	COUNTY	TOTAL SHEETS	SHEET NO.
506	*	ADAMS	59	21
		CONTRACT NO. 72C29		
	ILLINOIS	FED. AID PROJECT		

(126)RS-3,BRR,BDR,BJR,SCR

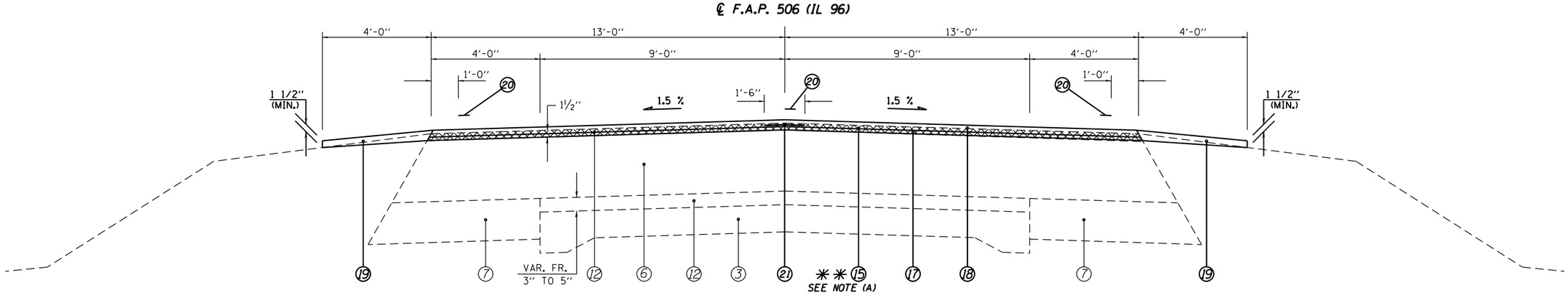

(7) STA 347+50.00 TO STA 351+44.20 [394.20'] ✱✱ SEE NOTE (A)

(11) STA 359+25.00 TO STA 360+61.00 [136.00']

(13) STA 367+32.60 TO STA 370+50.00 [317.40']

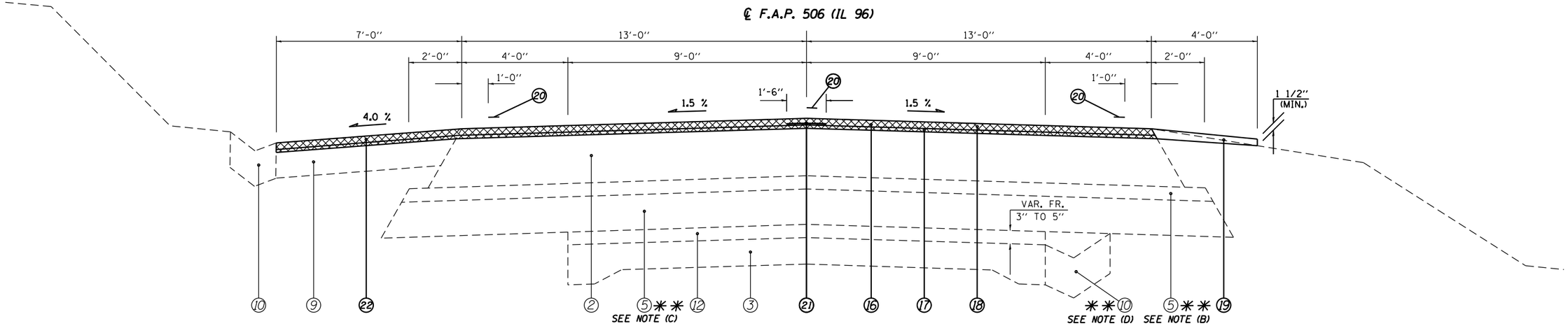

(8) STA 351+44.20 TO STA 356+40.00 [495.80']

✱✱ NOTE:

(A) MILLING DEPTH VAR. FR. 1 1/2" TO 2 1/4" - FR. STA. 351+29.20 TO 351+44.20.

(B) ROCKFILL (C.A. 6)

(C) ROCKFILL (PRIMARY CRUSHER RUN)

(D) EXIST. GUTTER FR. STA. 349+82.50 TO 356+60.00

LEGEND

1. EXIST. BITUMINOUS BASE COURSE, 8"
2. EXIST. BITUMINOUS CONCRETE PAVEMENT, TYPE 2 13"
3. EXIST. PCC PAVEMENT 9"-6"-9"
4. EXIST. SUB-BASE GRANULAR MATERIAL, 4"
5. EXIST. SUB-BASE GRANULAR, TYPE A 12"
6. EXIST. ROCKFILL
7. EXIST. BITUMINOUS CONCRETE BINDER COURSE, 13 1/2" & VAR.
8. EXIST. PIPE UNDERDRAINS FABRIC LINED TRENCH 4"
9. EXIST. BITUMINOUS SHOULDERS, 8"
10. EXIST. CONCRETE GUTTER, TYPE A
11. EXIST. COMB. CONCRETE CURB AND GUTTER, TYPE B-6.24
12. EXIST. BITUMINOUS OVERLAY
13. PROP. HOT-MIX ASPHALT BASE COURSE WIDENING, 10"
14. PROP. HOT-MIX ASPHALT SHOULDERS, 6 1/2" (SQ YD)
15. PROP. HOT-MIX ASPHALT SURFACE REMOVAL, 1 1/2"
16. PROP. HOT-MIX ASPHALT SURFACE REMOVAL, 2 1/4"
17. PROP. LEVELING BINDER (MACHINE METHOD), N50 3/4" 1
18. PROP. HOT-MIX ASPHALT SURFACE COURSE, MIX C, N50 1 1/2"
19. PROP. AGGREGATE WEDGE SHOULDER, TYPE B
20. PROP. PAINT PAVEMENT MARKING - LINE 5"
21. PROP. LONGITUDINAL JOINT SEALANT (INSTALLED BETWEEN LEV BIND & SURF)
22. PROP. HMA SHOULDERS (TONS)

1 REV. 10-22-2018

MODEL: Default
FILE NAME: pw:\\IL084EBIDNTEC.illinois.gov:PWIDOT\Documents\IDOT Offices\District 6\Projects\D672C29\CADData\CADsheets\D672C29-sht-typical.dgn

USER NAME = cabrerars	DESIGNED - RSC	REVISED -	STATE OF ILLINOIS DEPARTMENT OF TRANSPORTATION
	DRAWN - RSC	REVISED -	
PLOT SCALE = 100.0000 ' / in.	CHECKED -	REVISED -	
PLOT DATE = 10/3/2018	DATE -	REVISED -	

TYPICAL SECTIONS

SCALE: NTS | SHEET 3 OF 6 SHEETS | STA. 347+50.00 TO STA. 370+50.00

F.A.P. RTE.	SECTION	COUNTY	TOTAL SHEETS	SHEET NO.
506	*	ADAMS	59	22

CONTRACT NO. 72C29

ILLINOIS | FED. AID PROJECT

(126)RS-3,BRR,BDR,BJR,SCR

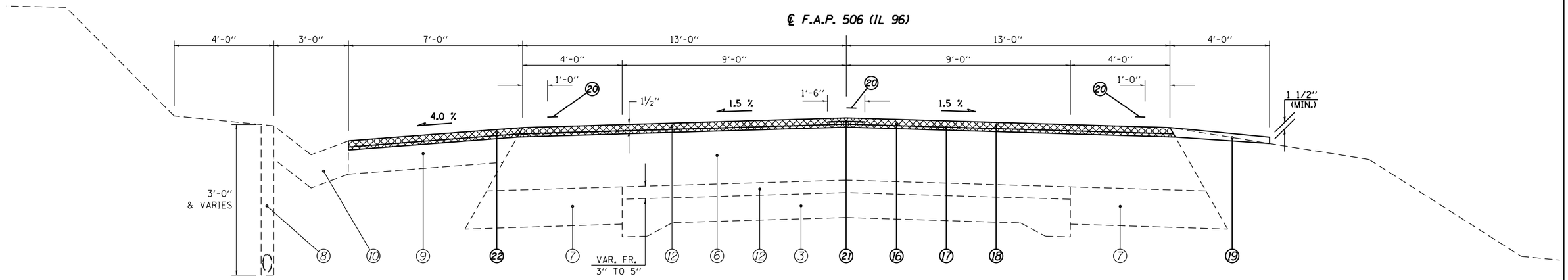

(9) STA 356+40.00 TO STA 358+62.70 [222.70']

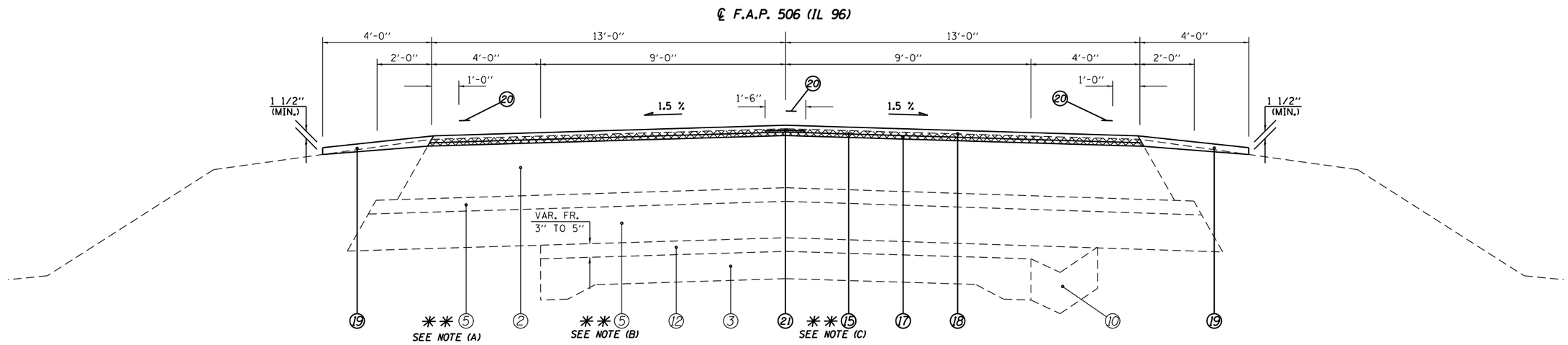

(10) STA 358+62.70 TO STA 359+25.00 [62.30'] ✱✱ SEE NOTE (C)

(12) STA 360+61.00 TO STA 367+32.60 [671.60']

✱✱ NOTE:

(A) ROCKFILL (C.A. 6)

(B) ROCKFILL (PRIMARY CRUSHER RUN)

(C) MILLING DEPTH VAR. FR. 2 1/4" TO 1 1/2" - FR. STA. 358+62.70 TO 358+77.70.

LEGEND

1. EXIST. BITUMINOUS BASE COURSE, 8"
2. EXIST. BITUMINOUS CONCRETE PAVEMENT, TYPE 2 13"
3. EXIST. PCC PAVEMENT 9"-6"-9"
4. EXIST. SUB-BASE GRANULAR MATERIAL, 4"
5. EXIST. SUB-BASE GRANULAR, TYPE A 12"
6. EXIST. ROCKFILL
7. EXIST. BITUMINOUS CONCRETE BINDER COURSE, 13 1/2" & VAR.
8. EXIST. PIPE UNDERDRAINS FABRIC LINED TRENCH 4"
9. EXIST. BITUMINOUS SHOULDERS, 8"
10. EXIST. CONCRETE GUTTER, TYPE A
11. EXIST. COMB. CONCRETE CURB AND GUTTER, TYPE B-6.24
12. EXIST. BITUMINOUS OVERLAY
13. PROP. HOT-MIX ASPHALT BASE COURSE WIDENING, 10"
14. PROP. HOT-MIX ASPHALT SHOULDERS, 6 1/2" (SQ YD)
15. PROP. HOT-MIX ASPHALT SURFACE REMOVAL, 1 1/2"
16. PROP. HOT-MIX ASPHALT SURFACE REMOVAL, 2 1/4"
17. PROP. LEVELING BINDER (MACHINE METHOD) N50 3/4" 1
18. PROP. HOT-MIX ASPHALT SURFACE COURSE, MIX C, N50 1 1/2"
19. PROP. AGGREGATE WEDGE SHOULDER, TYPE B
20. PROP. PAINT PAVEMENT MARKING - LINE 5"
21. PROP. LONGITUDINAL JOINT SEALANT (INSTALLED BETWEEN LEV BIND & SURF)
22. PROP. HMA SHOULDERS (TONS)

1 REV. 10-22-2018

MODEL: Default
FILE NAME: pw:\\IL084EBIDINTEG.illinois.gov:PWIDOT\Documents\IDOT Offices\District 6\Projects\D672C29\CADData\CADsheets\D672C29-sht-typical.dgn

USER NAME = cabrerars	DESIGNED - RSC	REVISED -	STATE OF ILLINOIS DEPARTMENT OF TRANSPORTATION
	DRAWN - RSC	REVISED -	
PLOT SCALE = 100.0000 ' / in.	CHECKED -	REVISED -	
PLOT DATE = 10/3/2018	DATE -	REVISED -	

TYPICAL SECTIONS

SCALE: NTS | SHEET 4 OF 6 SHEETS | STA. 356+40.00 TO STA. 367+32.60

F.A.P. RTE.	SECTION	COUNTY	TOTAL SHEETS	SHEET NO.
506	*	ADAMS	59	23

CONTRACT NO. 72C29

ILLINOIS | FED. AID PROJECT

(126)RS-3,BRR,BDR,BJR,SCR

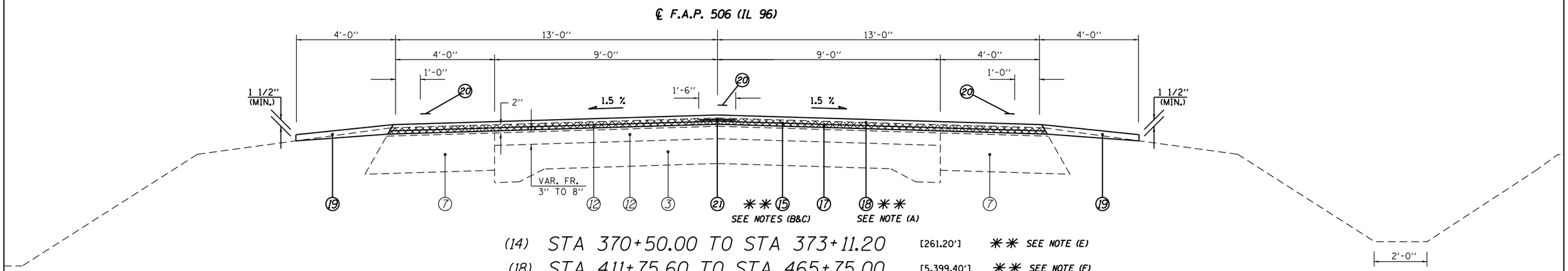

(14) STA 370+50.00 TO STA 373+11.20 [261.20'] ✳✳ SEE NOTE (E)

(18) STA 411+75.60 TO STA 465+75.00 [5,399.40'] ✳✳ SEE NOTE (F)

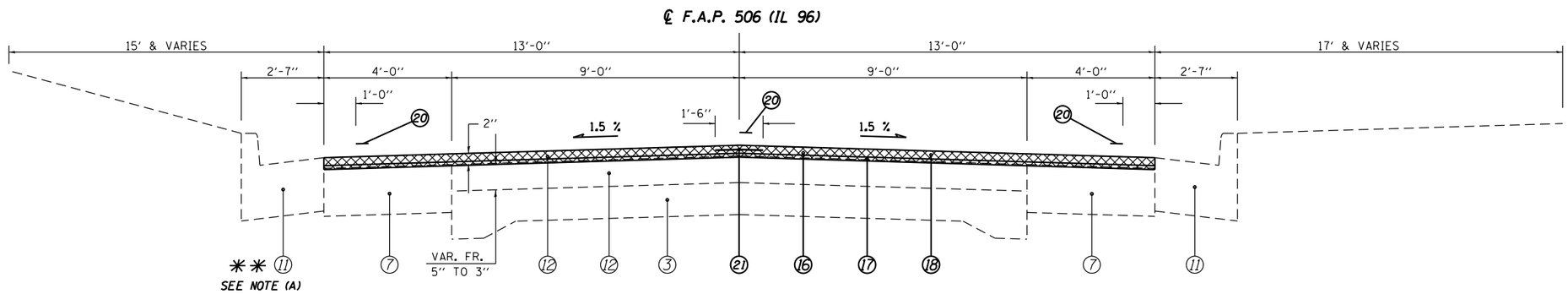

(15) STA 373+11.20 TO STA 389+20.70 [1,609.50']

LEGEND

1. EXIST. BITUMINOUS BASE COURSE, 8"
2. EXIST. BITUMINOUS CONCRETE PAVEMENT, TYPE 2 13"
3. EXIST. PCC PAVEMENT 9"-6"-9"
4. EXIST. SUB-BASE GRANULAR MATERIAL, 4"
5. EXIST. SUB-BASE GRANULAR, TYPE A 12"
6. EXIST. ROCKFILL
7. EXIST. BITUMINOUS CONCRETE BINDER COURSE, 13 1/2" & VAR.
8. EXIST. PIPE UNDERDRAINS FABRIC LINED TRENCH 4"
9. EXIST. BITUMINOUS SHOULDERS, 8"
10. EXIST. CONCRETE GUTTER, TYPE A
11. EXIST. COMB. CONCRETE CURB AND GUTTER, TYPE B-6.24
12. EXIST. BITUMINOUS OVERLAY
13. PROP. HOT-MIX ASPHALT BASE COURSE WIDENING, 10"
14. PROP. HOT-MIX ASPHALT SHOULDERS, 6 1/2" (SQ YD)
15. PROP. HOT-MIX ASPHALT SURFACE REMOVAL, 1 1/2"
16. PROP. HOT-MIX ASPHALT SURFACE REMOVAL, 2 1/4"
17. PROP. LEVELING BINDER (MACHINE METHOD), N50 3/4" △1
18. PROP. HOT-MIX ASPHALT SURFACE COURSE, MIX C, N50 1 1/2"
19. PROP. AGGREGATE WEDGE SHOULDER, TYPE B
20. PROP. PAINT PAVEMENT MARKING - LINE 5"
21. PROP. LONGITUDINAL JOINT SEALANT (INSTALLED BETWEEN LEV BIND & SURF)
22. PROP. HMA SHOULDERS (TONS)

✳✳ NOTE:

(A) ROCKFILL LOCATED UNDER APPROACH SLABS
STA. 370+50.00 TO 373+40.00 LT & RT
STA. 444+55.00 TO 447+25.00 LT & RT

(B) MILLING DEPTH VAR. FR. 1 1/2" TO 2 1/4" - FR. STA. 372+96.20 TO 373+11.20.

(C) MILLING DEPTH VAR. FR. 2 1/4" TO 1 1/2" - FR. STA. 411+75.60 TO 411+90.60.

(D) PROP. HMA & AGGR WEDGE SHLDS END & EXIST. CC&G BEGIN AT STA. 373+42.90 LT.

△1 REV. 10-22-2018

MODEL: Default
FILE NAME: pw:\\IL084EBIDINTEG.illinois.gov:PWIDOT\Documents\IDOT Offices\District 6\Projects\0672C29\CADData\CADsheets\0672C29-sht-typ0ical.dgn

USER NAME = cabrerars	DESIGNED - RSC	REVISED -	STATE OF ILLINOIS DEPARTMENT OF TRANSPORTATION
	DRAWN - RSC	REVISED -	
PLOT SCALE = 100.0000 ' / in.	CHECKED -	REVISED -	
PLOT DATE = 10/3/2018	DATE -	REVISED -	

TYPICAL SECTIONS

SCALE: NTS | SHEET 5 OF 6 SHEETS | STA. 370+50.00 TO STA. 465+75.00

F.A.P. RTE.	SECTION	COUNTY	TOTAL SHEETS	SHEET NO.
506	*	ADAMS	59	24
		CONTRACT NO. 72C29		
		ILLINOIS	FED. AID PROJECT	

(126)RS-3,BRR,BDR,BJR,SCR

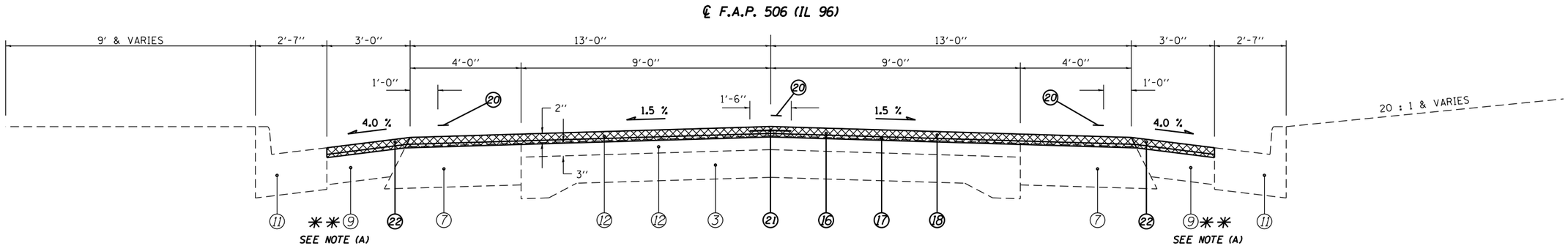

(16) STA 389+20.70 TO STA 405+94.60 [1,673.90'] ✳✳ SEE NOTE (A)

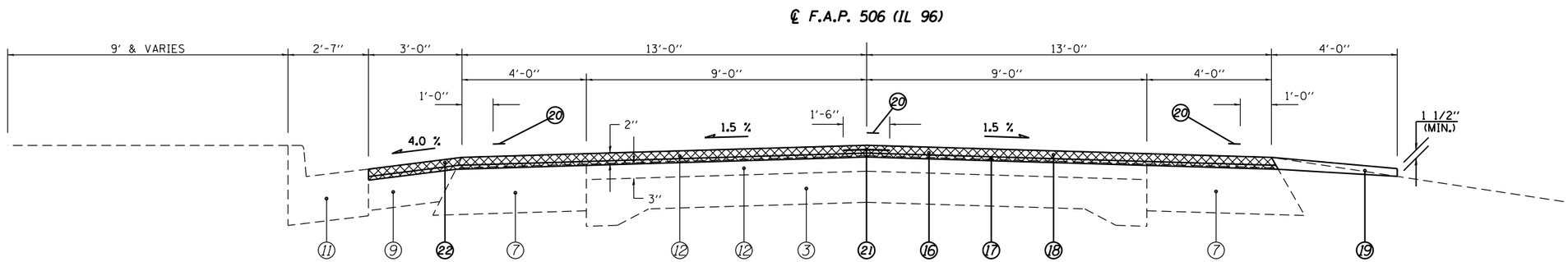

(17) STA 405+94.60 TO STA 411+75.60 [581.00']

✳✳ NOTE:

(A) WIDTH OF EXIST. BIT SHLD VAR. FR. 0' TO 3'-0" FR. STA. 389+20.70 TO 389+82.20 LT & FR. STA. 389+92.80 TO 390+45.80 RT.

LEGEND

1. EXIST. BITUMINOUS BASE COURSE, 8"
2. EXIST. BITUMINOUS CONCRETE PAVEMENT, TYPE 2 13"
3. EXIST. PCC PAVEMENT 9"-6"-9"
4. EXIST. SUB-BASE GRANULAR MATERIAL, 4"
5. EXIST. SUB-BASE GRANULAR, TYPE A 12"
6. EXIST. ROCKFILL
7. EXIST. BITUMINOUS CONCRETE BINDER COURSE, 13 1/2" & VAR.
8. EXIST. PIPE UNDERDRAINS FABRIC LINED TRENCH 4"
9. EXIST. BITUMINOUS SHOULDERS, 8"
10. EXIST. CONCRETE GUTTER, TYPE A
11. EXIST. COMB. CONCRETE CURB AND GUTTER, TYPE B-6.24
12. EXIST. BITUMINOUS OVERLAY
13. PROP. HOT-MIX ASPHALT BASE COURSE WIDENING, 10"
14. PROP. HOT-MIX ASPHALT SHOULDERS, 6 1/2" (SQ YD)
15. PROP. HOT-MIX ASPHALT SURFACE REMOVAL, 1 1/2"
16. PROP. HOT-MIX ASPHALT SURFACE REMOVAL, 2 1/4" 1
17. ~~PROP. LEVELING BINDER (MACHINE METHOD), N50 3/4"~~
18. PROP. HOT-MIX ASPHALT SURFACE COURSE, MIX C, N50 1 1/2"
19. PROP. AGGREGATE WEDGE SHOULDER, TYPE B
20. PROP. PAINT PAVEMENT MARKING - LINE 5"
21. PROP. LONGITUDINAL JOINT SEALANT (INSTALLED BETWEEN LEV BIND & SURF)
22. PROP. HMA SHOULDERS (TONS)

1 REV. 10-22-2018

MODEL: Default
FILE NAME: pw:\\IL084EBIDINTEG.illinois.gov:PWIDOT\Documents\IDOT Offices\District 6\Projects\D672C29\CADData\CADsheets\D672C29-sht-typlk.dgn

USER NAME = cabrerars	DESIGNED - RSC	REVISED -	STATE OF ILLINOIS DEPARTMENT OF TRANSPORTATION
	DRAWN - RSC	REVISED -	
PLOT SCALE = 100.0000 ' / in.	CHECKED -	REVISED -	
PLOT DATE = 10/3/2018	DATE -	REVISED -	

TYPICAL SECTIONS

SCALE: NTS | SHEET 6 OF 6 SHEETS | STA. 389+20.70 TO STA. 411+75.60

F.A.P. RTE.	SECTION	COUNTY	TOTAL SHEETS	SHEET NO.
506	*	ADAMS	59	25
		CONTRACT NO. 72C29		
		ILLINOIS FED. AID PROJECT		

(126)RS-3,BRR,BDR,BJR,SCR

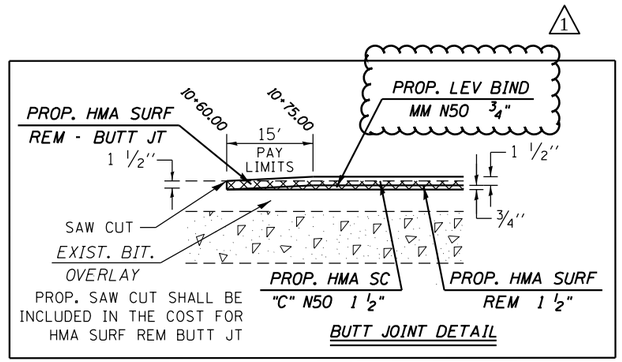

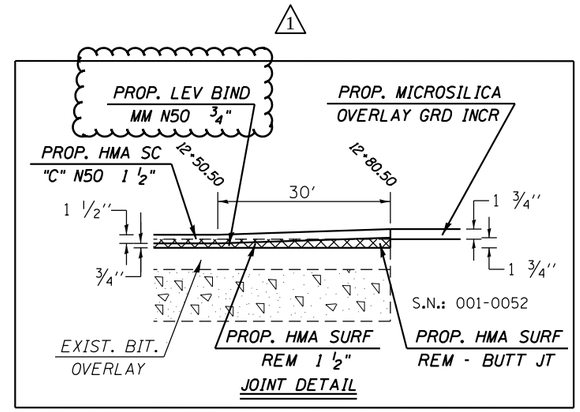

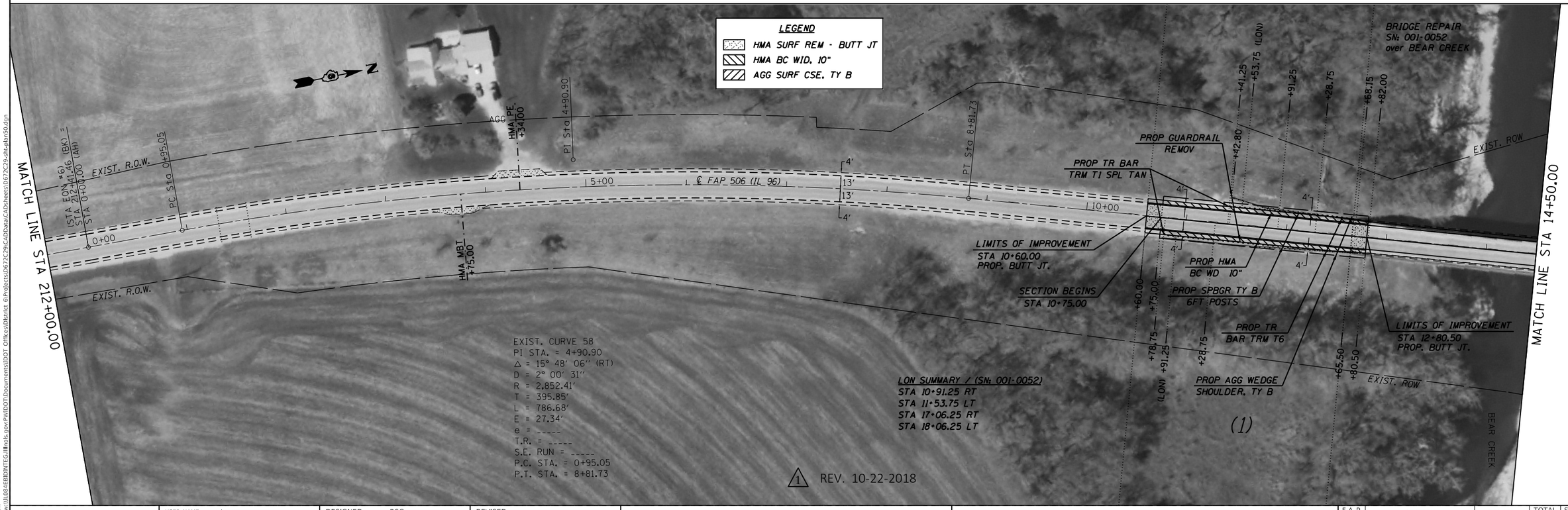

1 REV. 10-22-2018

MODEL: Default
FILE NAME: pw:\\IL084EBIDINTEG.illinois.gov:PWIDOT\Documents\IDOT Offices\District 6\Projects\D672C29\CADData\CADsheets\D672C29-sht-plan50.dgn

USER NAME = cabrerars	DESIGNED - RSC	REVISED -	
	DRAWN - RSC	REVISED -	
PLOT SCALE = 100.0000 ' / in.	CHECKED -	REVISED -	
PLOT DATE = 10/3/2018	DATE -	REVISED -	

STATE OF ILLINOIS
DEPARTMENT OF TRANSPORTATION

PLAN SHEETS

SCALE: 50 | SHEET 1 OF 12 SHEETS | STA. 197+00.00 TO STA. 14+50.00

F.A.P. RTE.	SECTION	COUNTY	TOTAL SHEETS	SHEET NO.
506	*	ADAMS	59	27
		CONTRACT NO. 72C29		
		ILLINOIS	FED. AID PROJECT	

(126)RS-3,BRR,BDR,BJR,SCR

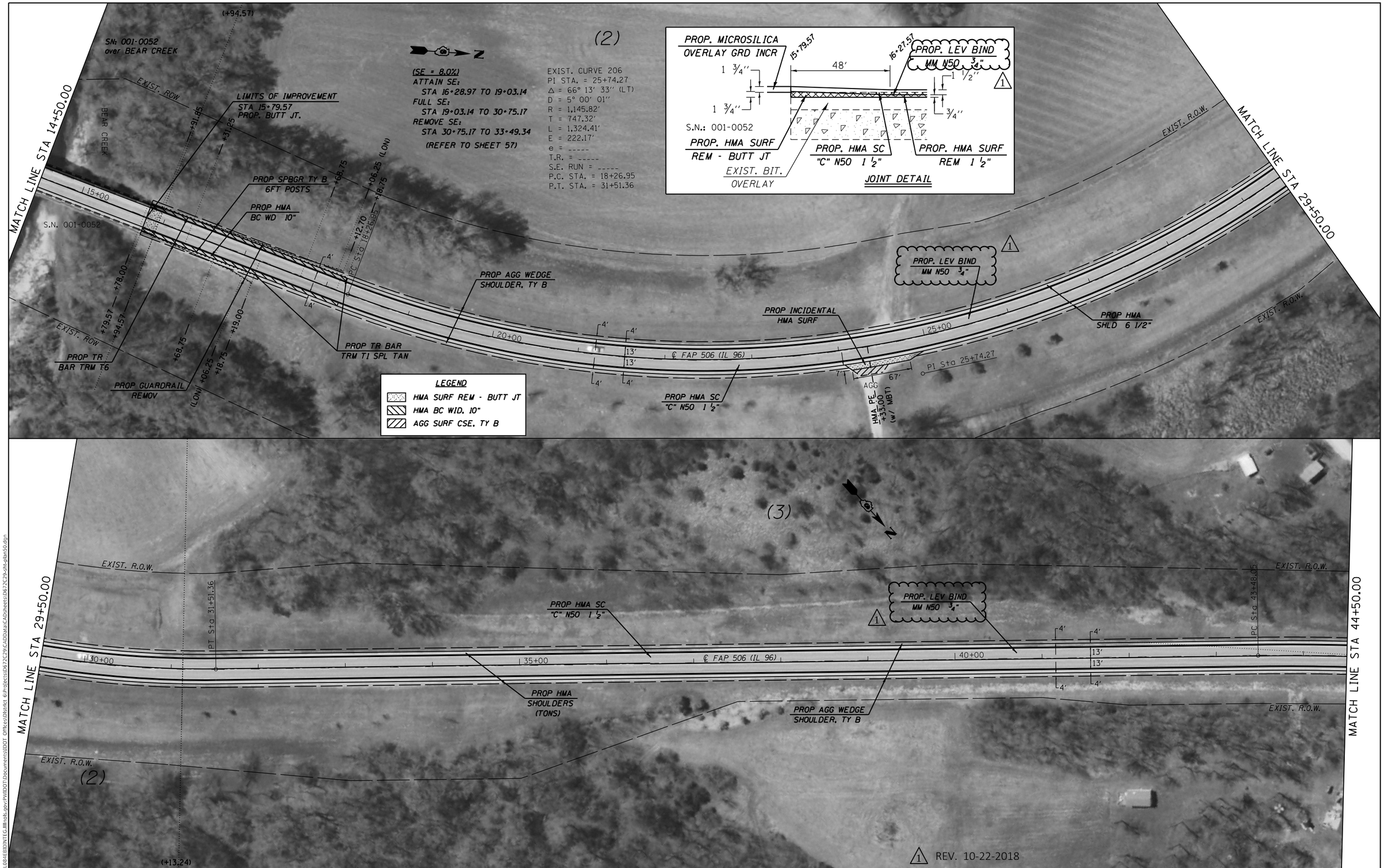

MODEL: Default
FILE NAME: pw:\\IL084EBIDINTEG.illinois.gov:PWIDOT\Documents\IDOT Offices\District 6\Projects\D672C29\CADData\CADsheets\D672C29-sht-plan50.dgn

USER NAME = cabrerars	DESIGNED - RSC	REVISED -	
	DRAWN - RSC	REVISED -	
PLOT SCALE = 100.0000 ' / in.	CHECKED -	REVISED -	
PLOT DATE = 10/3/2018	DATE -	REVISED -	

STATE OF ILLINOIS
DEPARTMENT OF TRANSPORTATION

PLAN SHEETS

SCALE: 50 | SHEET 2 OF 12 SHEETS | STA. 14+50.00 TO STA. 44+50.00

F.A.P. RTE.	SECTION	COUNTY	TOTAL SHEETS	SHEET NO.
506	*	ADAMS	59	28
		CONTRACT NO. 72C29		
		ILLINOIS	FED. AID PROJECT	

(126)RS-3,BRR,BDR,BJR,SCR

USER NAME = cabrerars	DESIGNED - RSC	REVISED -
	DRAWN - RSC	REVISED -
PLOT SCALE = 100.0000 ' / in.	CHECKED -	REVISED -
PLOT DATE = 10/3/2018	DATE -	REVISED -

STATE OF ILLINOIS
DEPARTMENT OF TRANSPORTATION

PLAN SHEETS

SCALE: 50 | SHEET 3 OF 12 SHEETS | STA. 14+50.00 TO STA. 44+50.00

F.A.P. RTE.	SECTION	COUNTY	TOTAL SHEETS	SHEET NO.
506	*	ADAMS	59	29
		CONTRACT NO. 72C29		
		ILLINOIS	FED. AID PROJECT	

(126)RS-3,BRR,BDR,BJR,SCR

MODEL: Default
FILE NAME: pw:\\IL084EBIDINTEG.illinois.gov:PWIDOT\Documents\IDOT Offices\District 6\Projects\0672C29\CADData\CADsheets\0672C29-sht-plan50.dgn

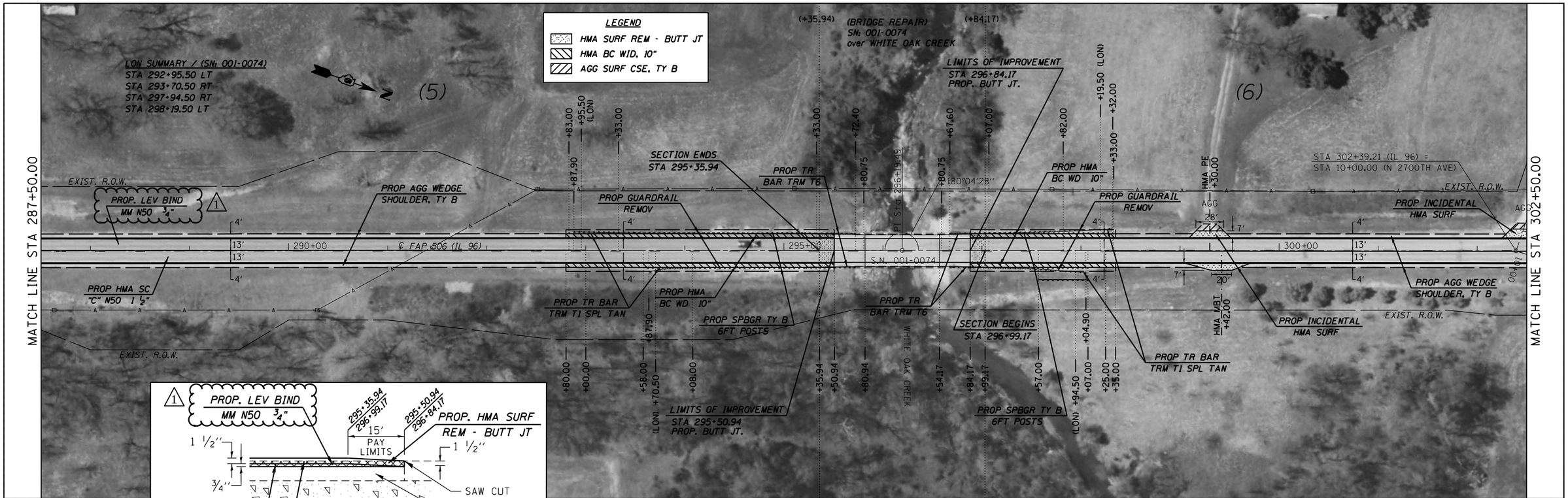

USER NAME = cabrerars	DESIGNED - RSC	REVISED -	STATE OF ILLINOIS DEPARTMENT OF TRANSPORTATION
	DRAWN - RSC	REVISED -	
PLOT SCALE = 100.0000 ' / in.	CHECKED -	REVISED -	
PLOT DATE = 10/3/2018	DATE -	REVISED -	

PLAN SHEETS

SCALE: 50 | SHEET 4 OF 12 SHEETS | STA. 287+50.00 TO STA. 317+50.00

F.A.P. RTE.	SECTION	COUNTY	TOTAL SHEETS	SHEET NO.
506	*	ADAMS	59	30

CONTRACT NO. 72C29

ILLINOIS | FED. AID PROJECT

(126)RS-3,BRR,BDR,BJR,SCR

MODEL: Default
FILE NAME: pw:\\IL084EBIDINTEG.illinois.gov:PWIDOT\Documents\IDOT Offices\District 6\Projects\D672C29\CADData\CADsheets\D672C29-sht-plan50.dgn

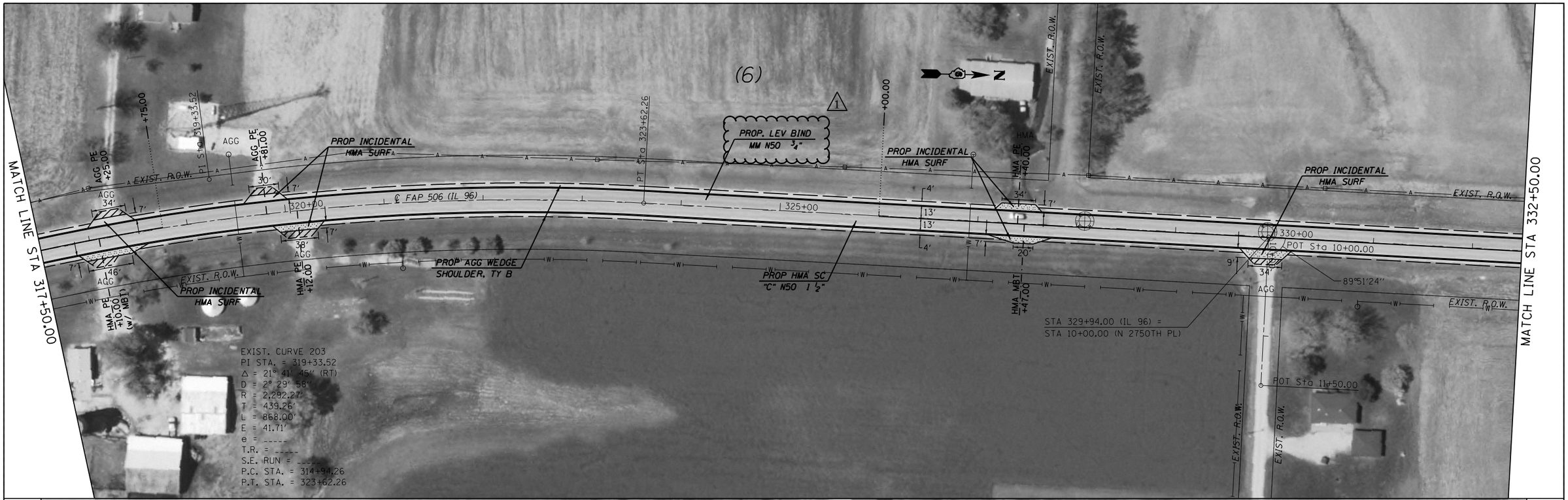

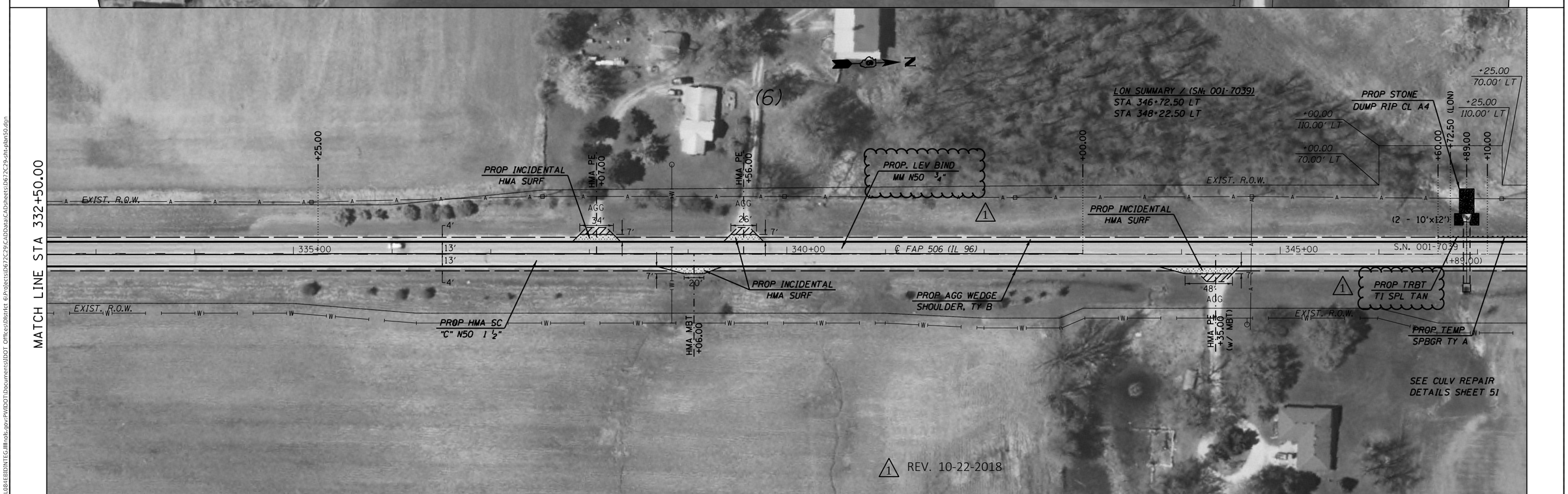

MODEL: Default
FILE NAME: pw:\\IL084EBIDNTEG.illinois.gov:PWIDOT\Documents\IDOT Offices\District 6\Projects\D672C29\CADData\CADsheets\D672C29-sht-plan50.dgn

USER NAME = cabrerars	DESIGNED - RSC	REVISED -	
	DRAWN - RSC	REVISED -	
PLOT SCALE = 100.0000 ' / in.	CHECKED -	REVISED -	
PLOT DATE = 10/18/2018	DATE -	REVISED -	

STATE OF ILLINOIS
DEPARTMENT OF TRANSPORTATION

PLAN SHEETS

SCALE: 50 | SHEET 5 OF 12 SHEETS | STA. 317+50.00 TO STA. 347+50.00

F.A.P. RTE.	SECTION	COUNTY	TOTAL SHEETS	SHEET NO.
506	*	ADAMS	59	31
		CONTRACT NO. 72C29		
		ILLINOIS	FED. AID PROJECT	

(126)RS-3,BRR,BDR,BJR,SCR

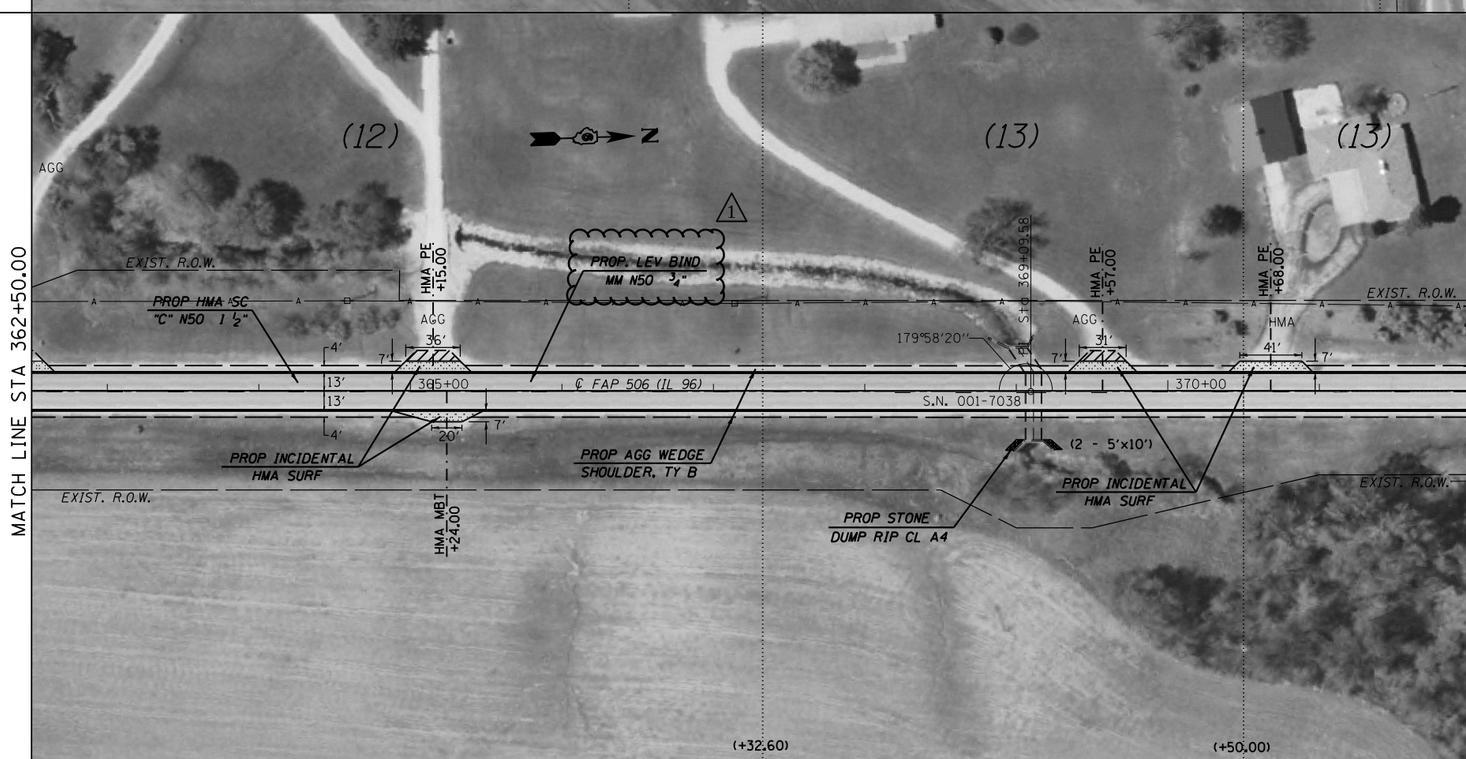

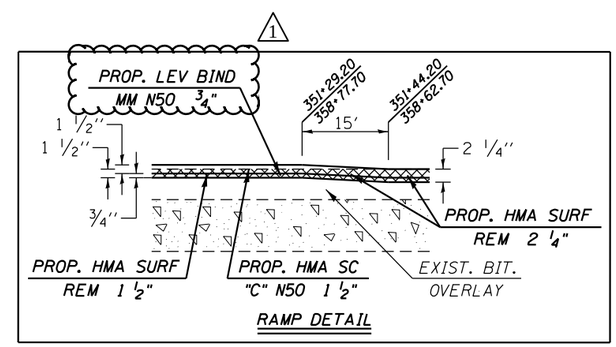

1 REV. 10-22-2018

USER NAME = cabrerars	DESIGNED - RSC	REVISED -	
	DRAWN - RSC	REVISED -	
PLOT SCALE = 100.0000 ' / in.	CHECKED -	REVISED -	
PLOT DATE = 10/3/2018	DATE -	REVISED -	

STATE OF ILLINOIS
DEPARTMENT OF TRANSPORTATION

PLAN SHEETS

SCALE: 50 | SHEET 6 OF 12 SHEETS | STA. 347+50.00 TO STA. 372+00.00

F.A.P. RTE.	SECTION	COUNTY	TOTAL SHEETS	SHEET NO.
506	*	ADAMS	59	32
		CONTRACT NO. 72C29		
		ILLINOIS	FED. AID PROJECT	

(126)RS-3,BRR,BDR,BJR,SCR

MODEL: Default
FILE NAME: pw:\\IL084EBIDNTEG.illinois.gov:PWIDOT\Documents\IDOT Offices\District 6\Projects\D672C29\CADData\CADsheets\D672C29-sht-plan50.dgn

(LIMA)

(14)

(+11.20)

12" RCP

EXIST. R.O.W.

PROP. AGG WEDGE SHLDRS. TY B

SPEED LIMIT 30

PROP. LEV BIND MM N50 3/4"

MATCH LINE STA 372+00.00

4'-0"

13'-0"

13'-0"

4'-0"

3'x2' RCBC

24" RCP

AGG

CONC

372 373 374 375+00 ℄ FAP 506 (IL 96) 376 377 POT STA 10+00.00

PROP. HMA SC "C" N50 1 1/2"

ADVERTISEMENT SIGN

PROP. INCIDENTAL HMA SURF

PROP. PC CONC SIDEWALK 4"

91°09'38"

S RANGE LINE STREET "A"

+15.77 32.31' RT

STA 377+25.50 (IL 96) = STA 10+00.00 (STREET "A")

STOP SIGN

PROP. SIDEWALK REMOVAL

PROP. COMB CC&G TB6.24

PROP. COMB CURB GUTTER REM

+31.77 32.29' RT

+96.20 +11.20 +42.90

PROP. LEV BIND MM N50 3/4"

372+96.20 373+11.20

15'

1 1/2" 1 1/2" 3/4" 2 1/4"

PROP. HMA SURF REM 2 1/4"

PROP. HMA SURF REM 1 1/2"

PROP. HMA SC "C" N50 1 1/2"

EXIST. BIT. OVERLAY

RAMP DETAIL

MATCH LINE STA 378+00.00

PROP. LEV BIND MM N50 3/4"

VAULT

378 379 380+00 ℄ FAP 506 (IL 96) 381 382 383 POT STA 10+00.00

PROP. HMA SC "C" N50 1 1/2"

O&C

PROP. COMB CURB GUTTER REM

+42.68 30.00' LT

PROP. COMB CC&G TB6.24

PROP. SIDEWALK REMOVAL

PROP. PC CONC SIDEWALK 4"

BLANK STOP SIGN

S RIDGE LINE N2850TH AVE

33'-0"

90°33'23"

PROP. INCIDENTAL HMA SURF

+17.61 36.23' RT

PROP. COMB CC&G TB6.24

PROP. SIDEWALK REMOVAL

PROP. PC CONC SIDEWALK 4"

HEADS UP SALON

CANTON TOLL FERRY SOUTH 96

HWY 96 N N2850TH AVE

STA 382+79.29 (IL 96) = STA 10+00.00 (N 2850TH AVE) (W MEYER RD)

+50.00

MATCH LINE STA 384+00.00

(15)

1 REV. 10-22-2018

MODEL: Default
FILE NAME: pw:\\IL084EBIDINTEG.illinois.gov:PWIDOT\Documents\IDOT Offices\District 6\Projects\0672C29\CADData\CADsheets\0672C29-sht-plan20.dgn

USER NAME = cabrerars	DESIGNED - RSC	REVISED -	
	DRAWN - RSC	REVISED -	
PLOT SCALE = 40.0000 ' / in.	CHECKED -	REVISED -	
PLOT DATE = 10/3/2018	DATE -	REVISED -	

STATE OF ILLINOIS
DEPARTMENT OF TRANSPORTATION

PLAN SHEETS

SCALE: 20 | SHEET 7 OF 12 SHEETS | STA. 372+00.00 TO STA. 384+00.00

F.A.P. RTE.	SECTION	COUNTY	TOTAL SHEETS	SHEET NO.
506	*	ADAMS	59	33
		CONTRACT NO. 72C29		
		ILLINOIS	FED. AID PROJECT	

(126)RS-3,BRR,BDR,BJR,SCR

USER NAME = cabrerars	DESIGNED - RSC	REVISED -
	DRAWN - RSC	REVISED -
PLOT SCALE = 40.0000 ' / in.	CHECKED -	REVISED -
PLOT DATE = 10/3/2018	DATE -	REVISED -

STATE OF ILLINOIS
DEPARTMENT OF TRANSPORTATION

PLAN SHEETS

SCALE: 20 | SHEET 8 OF 12 SHEETS | STA. 384+00.00 TO STA. 396+00.00

F.A.P. RTE.	SECTION	COUNTY	TOTAL SHEETS	SHEET NO.
506	*	ADAMS	59	34

CONTRACT NO. 72C29

ILLINOIS | FED. AID PROJECT

(126)RS-3,BRR,BDR,BJR,SCR

MODEL: Default
FILE NAME: pw:\\IL084EBIDINTEG.illinois.gov:PWIDOT\Documents\IDOT Offices\District 6\Projects\D672C29\CADData\CADsheets\D672C29-sht-plan20.dgn

1 REV. 10-22-2018

MODEL: Default
FILE NAME: pw:\\IL084EBIDINTEG.illinois.gov:PWIDOT\Documents\IDOT Offices\District 6\Projects\D672C29\CADData\CADsheets\D672C29-sht-plan20.dgn

USER NAME = cabrerars	DESIGNED - RSC	REVISED -	
	DRAWN - RSC	REVISED -	
PLOT SCALE = 40.0000 ' / in.	CHECKED -	REVISED -	
PLOT DATE = 10/3/2018	DATE -	REVISED -	

STATE OF ILLINOIS
DEPARTMENT OF TRANSPORTATION

PLAN SHEETS

SCALE: 20 | SHEET 9 OF 12 SHEETS | STA. 396+00.00 TO STA. 408+00.00

F.A.P. RTE.	SECTION	COUNTY	TOTAL SHEETS	SHEET NO.
506	*	ADAMS	59	35

CONTRACT NO. 72C29

ILLINOIS | FED. AID PROJECT

(126)RS-3,BRR,BDR,BJR,SCR

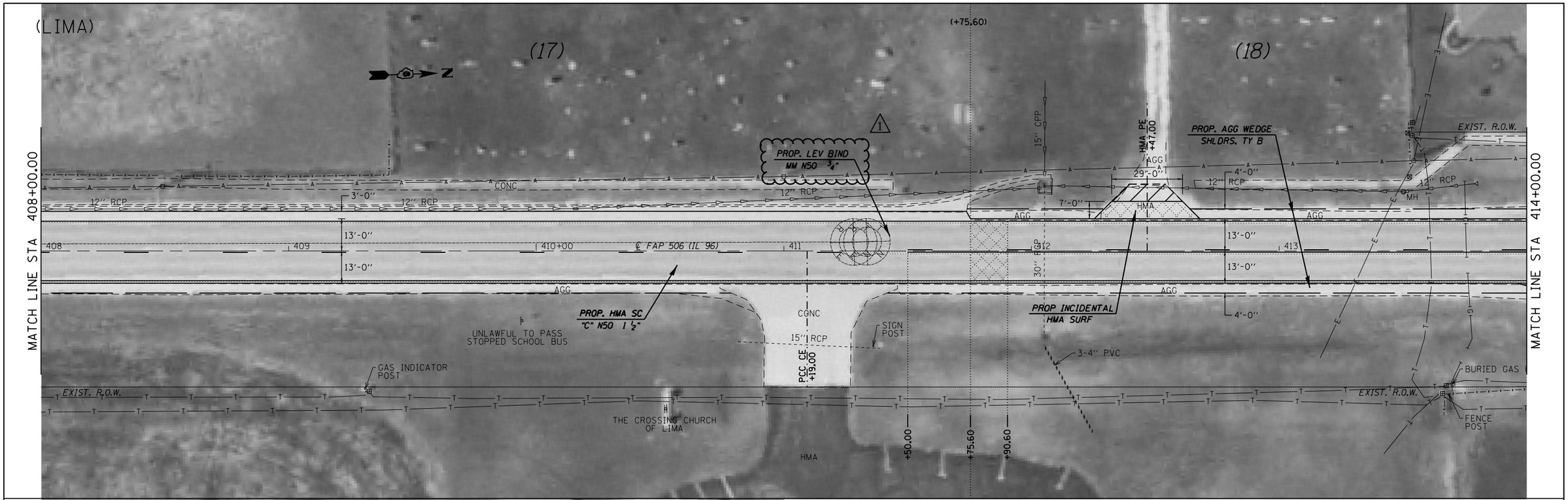

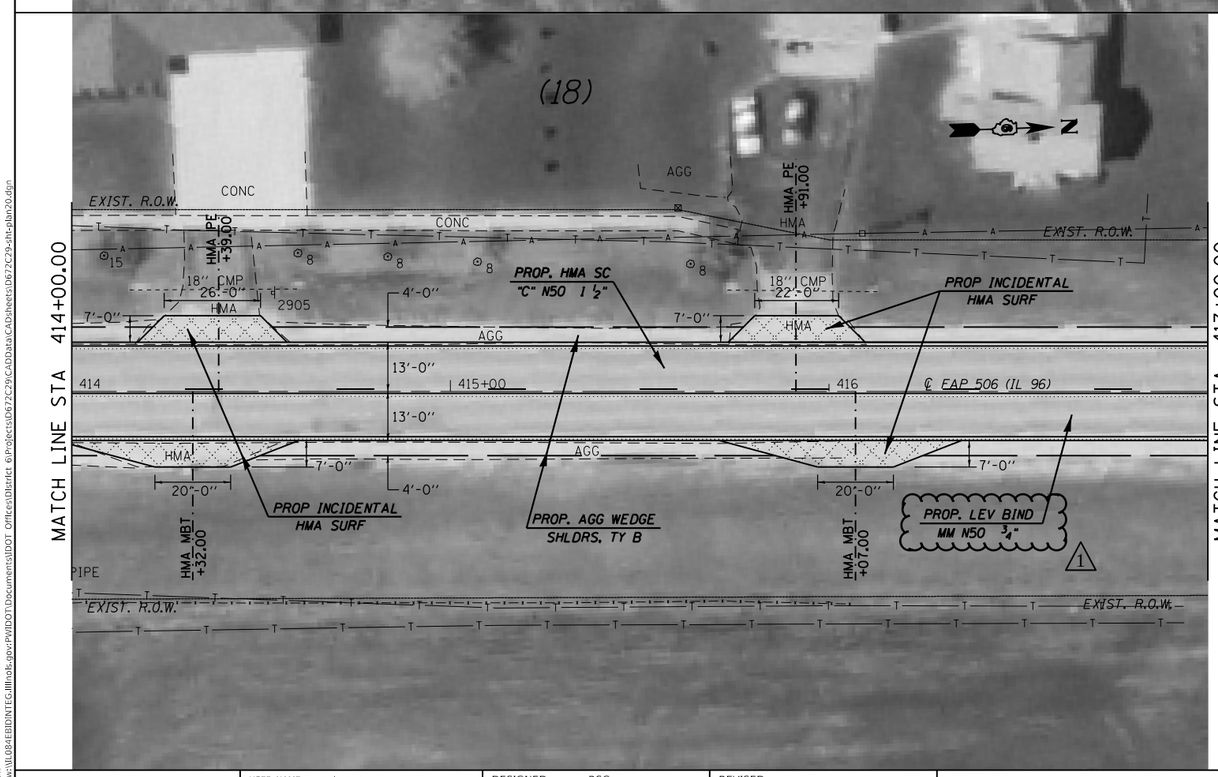

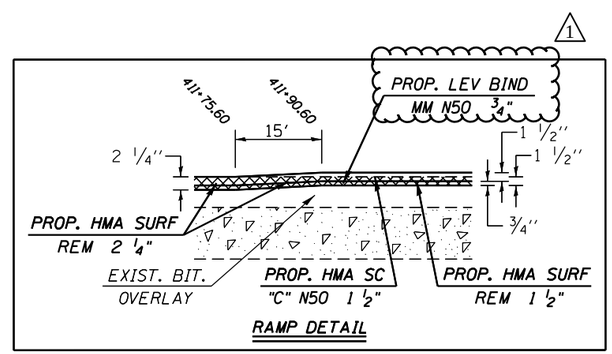

1 REV. 10-22-2018

MODEL: Default
FILE NAME: pw:\\IL084EBIDINTEG.illinois.gov:PWIDOT\Documents\IDOT Offices\District 6\Projects\D672C29\CADData\CADsheets\D672C29-sht-plan20.dgn

USER NAME = cabrerars	DESIGNED - RSC	REVISED -	
	DRAWN - RSC	REVISED -	
PLOT SCALE = 40.0000 ' / in.	CHECKED -	REVISED -	
PLOT DATE = 10/3/2018	DATE -	REVISED -	

STATE OF ILLINOIS
DEPARTMENT OF TRANSPORTATION

PLAN SHEETS

SCALE: 20 | SHEET 10 OF 12 SHEETS | STA. 408+00.00 TO STA. 417+00.00

F.A.P. RTE.	SECTION	COUNTY	TOTAL SHEETS	SHEET NO.
506	*	ADAMS	59	36
		CONTRACT NO. 72C29		
		ILLINOIS	FED. AID PROJECT	

(126)RS-3,BRR,BDR,BJR,SCR

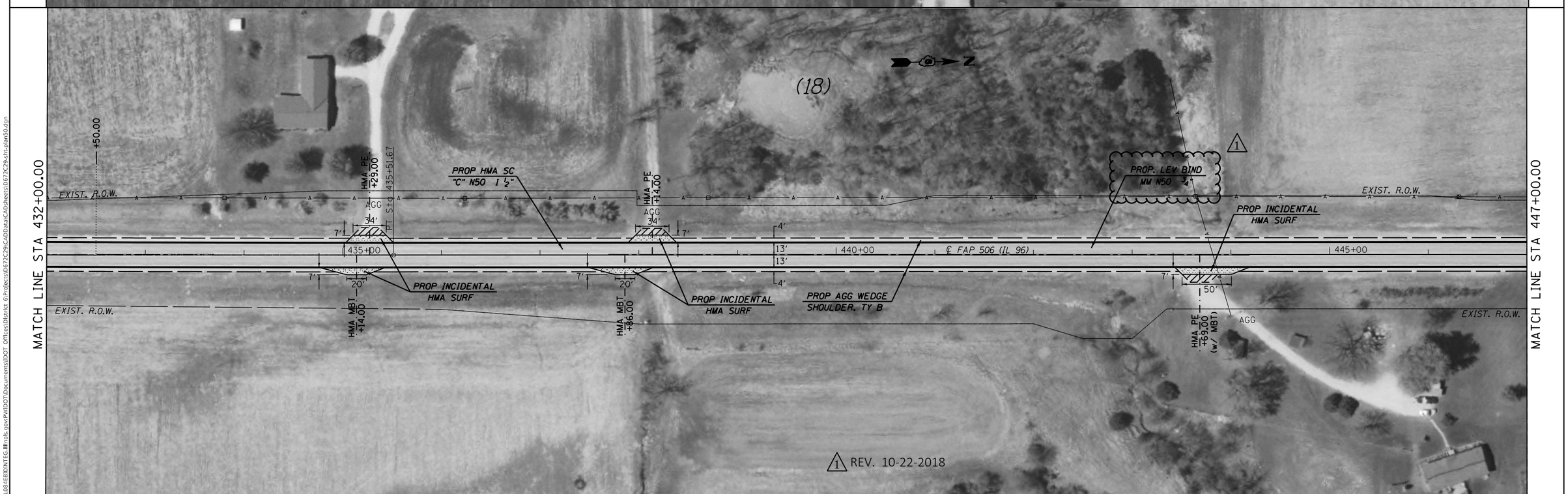

MODEL: Default
FILE NAME: pw:\\IL084EBIDINTEG.illinois.gov:PWIDOT\Documents\IDOT Offices\District 6\Projects\D672C29\CADData\CADsheets\D672C29-sht-plan50.dgn

USER NAME = cabrerars	DESIGNED - RSC	REVISED -	
	DRAWN - RSC	REVISED -	
PLOT SCALE = 100.0000 ' / in.	CHECKED -	REVISED -	
PLOT DATE = 10/3/2018	DATE -	REVISED -	

STATE OF ILLINOIS
DEPARTMENT OF TRANSPORTATION

PLAN SHEETS

SCALE: 50 | SHEET 11 OF 12 SHEETS | STA. 417+00.00 TO STA. 447+00.00

F.A.P. RTE.	SECTION	COUNTY	TOTAL SHEETS	SHEET NO.
506	*	ADAMS	59	37
		CONTRACT NO. 72C29		
		ILLINOIS	FED. AID PROJECT	

(126)RS-3,BRR,BDR,BJR,SCR

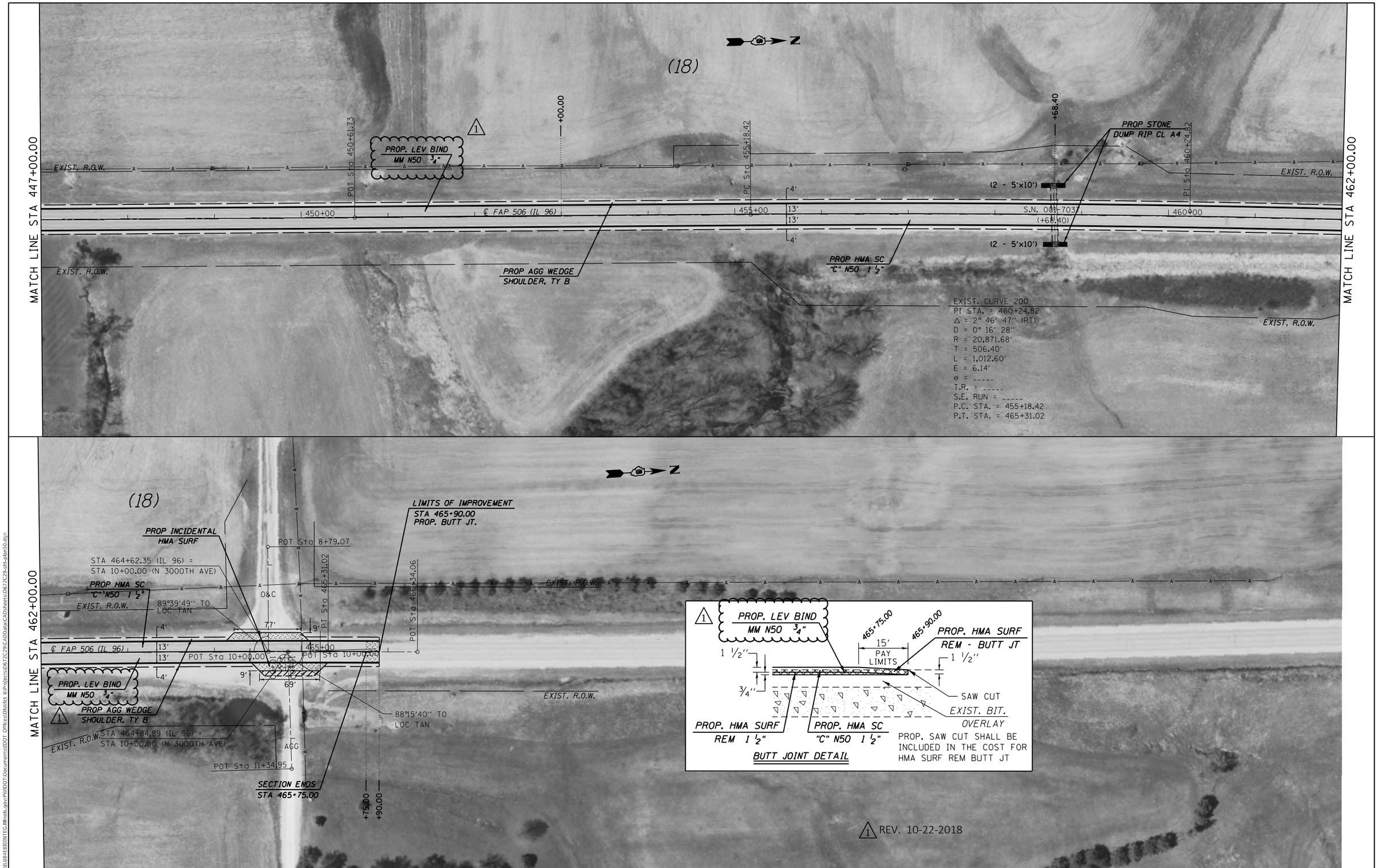

MODEL: Default
FILE NAME: pw:\\IL084EBIDINTEG.illinois.gov:PWIDOT\Documents\IDOT Offices\District 6\Projects\D672C29\CADData\CADsheets\D672C29-sht-plan50.dgn

USER NAME = cabrerars	DESIGNED - RSC	REVISED -	
	DRAWN - RSC	REVISED -	
PLOT SCALE = 100.0000 ' / in.	CHECKED -	REVISED -	
PLOT DATE = 10/3/2018	DATE -	REVISED -	

STATE OF ILLINOIS
DEPARTMENT OF TRANSPORTATION

PLAN SHEETS

SCALE: 50 | SHEET 12 OF 12 SHEETS | STA. 447+00.00 TO STA. 466+34.06

F.A.P. RTE.	SECTION	COUNTY	TOTAL SHEETS	SHEET NO.
506	*	ADAMS	59	38
		CONTRACT NO. 72C29		
		ILLINOIS	FED. AID PROJECT	

(126)RS-3,BRR,BDR,BJR,SCR

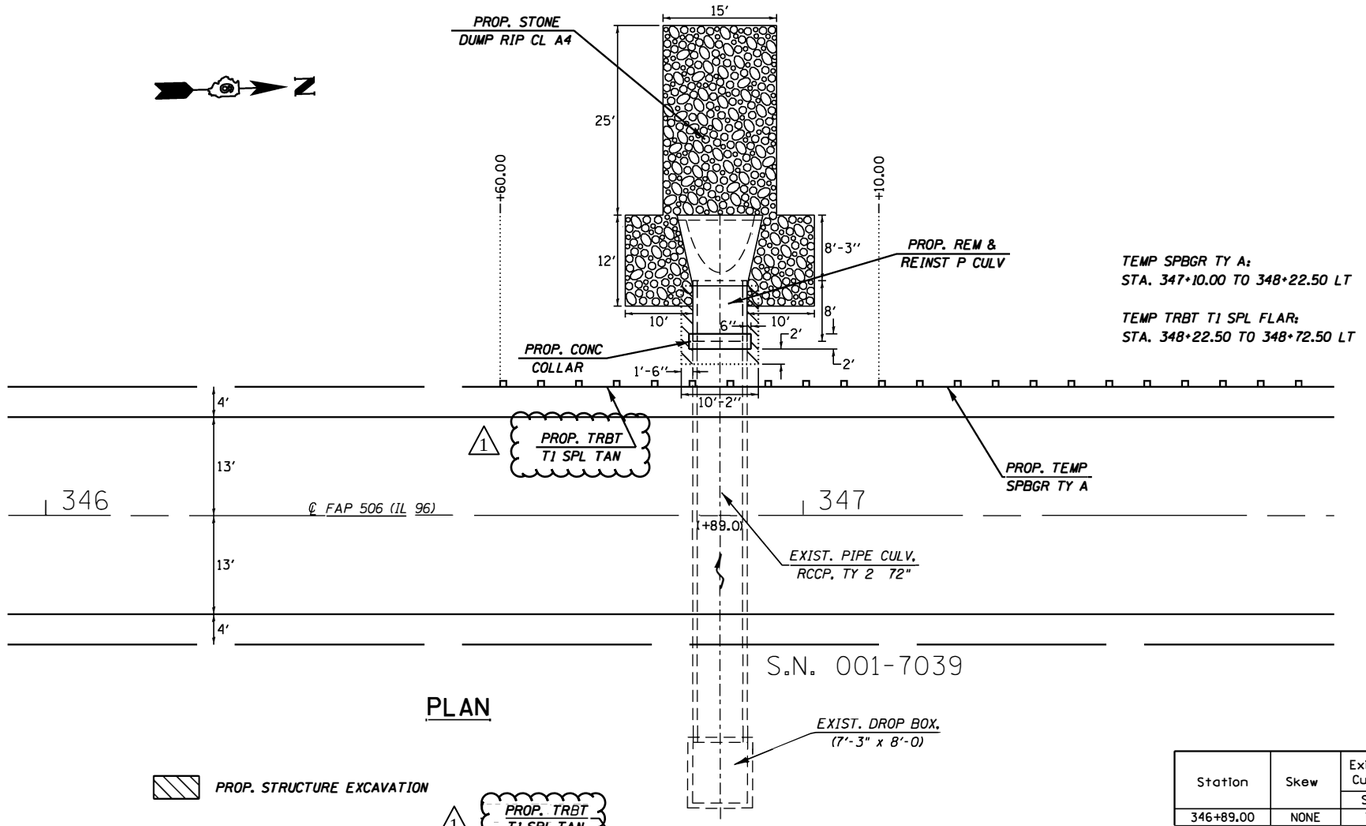

TEMP SPBGR TY A:
STA. 347+10.00 TO 348+22.50 LT

TEMP TRBT TI SPL FLAR:
STA. 348+22.50 TO 348+72.50 LT

PLAN

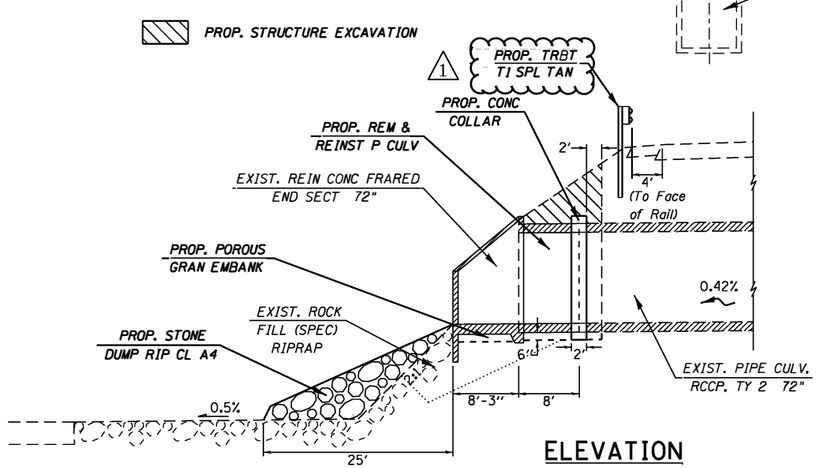

ELEVATION

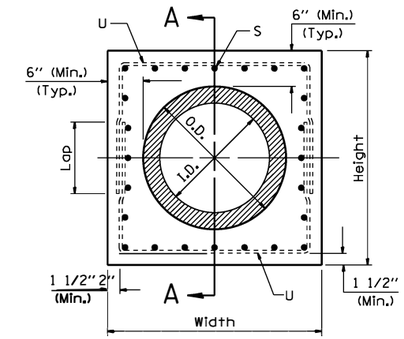

PIPE CULVERT COLLAR

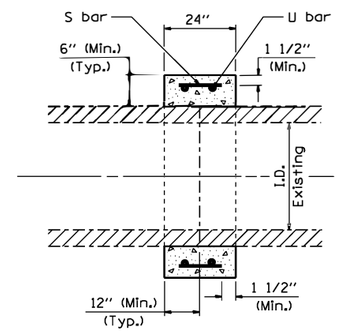

SECTION A-A

(Pipe end to pipe end,
No expansion bolts required)

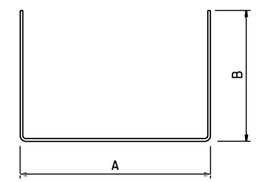

#5 U - bar

Station	Skew	Existing Culvert	Proposed Culvert		Collar		Reinforcement Bars										Class SI Concrete Collar
							S bar			U bar						lb	
		Size	I.D.	O.D.	Height	Width	No.	Size	Length	No.	Size	A	B	Lap	Length		yd³
346+89.00	NONE	72"	72"	86"	98"	98"	24	#5	1'-9"	4	#5	7'-11"	5'-3"	2'-6"	18'-7"	121.3	2.0

TOTAL BILL OF MATERIAL

ITEM	UNIT	TOTAL
Structure Excavation	CU YD	21
Remove and Reinstall Pipe Culvert	FOOT	17
Concrete Collar	CU YD	2
Reinforcement Bars	POUND	122
Porous Granular Embankment	TON	8
Stone Dumped Riprap, Class A4	SQ YD	69
Temporary Steel Plate Beam Guardrail, Type A	FOOT	112.5
Temporary Traffic Barrier Terminal, Type 1	EACH	1
Temporary Traffic Barrier Terminal, Type 1, Special (Flared)	EACH	1

1 Special (Tangent)

GENERAL NOTES

Plan dimensions and details relative to existing plans are subject to nominal construction variations. The Contractor shall field verify existing dimensions and details affecting new construction and make necessary adjustments prior to construction or ordering of materials. Such variations shall not be cause for additional compensation for change in scope of work; however, the Contractor will be paid for the quantity actually furnished at the unit price bid for the work.

Existing reinforced concrete flared end sections and pipe culverts shall be removed so that all sections considered suitable for future use by the Engineer shall be salvaged. Any material having salvage value which has been damaged by the Contractor shall be replaced by the Contractor at his/her expense with new sections of same type and size.

Mastic Joint Sealer for pipe connections shall meet the requirements of Section 1005 of the Standard Specifications.

1 REV. 10-22-2018

MODEL: Default
FILE NAME: pw:\\IL084EBSINTEG.illinois.gov:PWIDOT\Documents\IDOT Offices\District 6\Projects\D672C29\CADData\CADsheets\D672C29-sht-culvrepair.dgn

USERNAME = cabrrars	DESIGNED - RSC	REVISED -	
	DRAWN - RSC	REVISED -	
PLOT SCALE = 40.0000 ' / in.	CHECKED -	REVISED -	
PLOT DATE = 10/18/2018	DATE -	REVISED -	

STATE OF ILLINOIS
DEPARTMENT OF TRANSPORTATION

PIPE CULVERT REPAIR DETAILS
SN: 001-7039

SCALE: NTS | SHEET 1 OF 1 SHEETS | STA. 345+95.00 TO STA. 348+22.50

F.A.P. RTE.	SECTION	COUNTY	TOTAL SHEETS	SHEET NO.
506	*	ADAMS	59	51
		CONTRACT NO. 72C29		

ILLINOIS FED. AID PROJECT

(126)RS-3,BRR,BOR,BJR,SCR