STATE OF ILLINOIS
DEPARTMENT OF TRANSPORTATION

ROUTE NO.	SECTION	COUNTY	TOTAL SHEETS	SHEET NO.
		Cook	8	5
FED. ROAD DIST. NO. 7		ILLINOIS	FED. AID PROJECT-	

SHEET NO. 2
2 SHEETS

Contract Number: 60C47

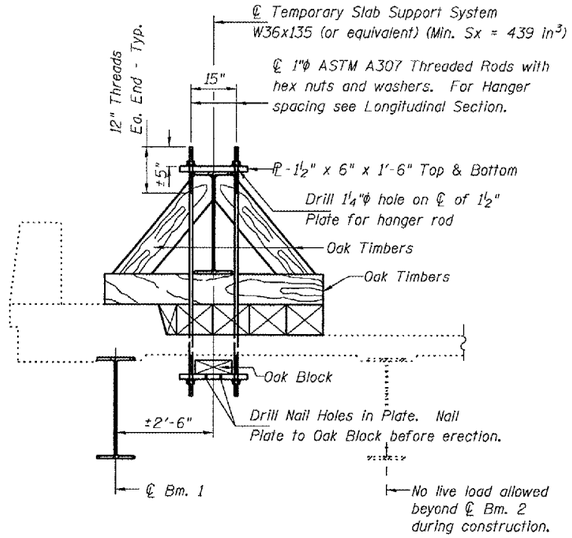

SECTION A-A

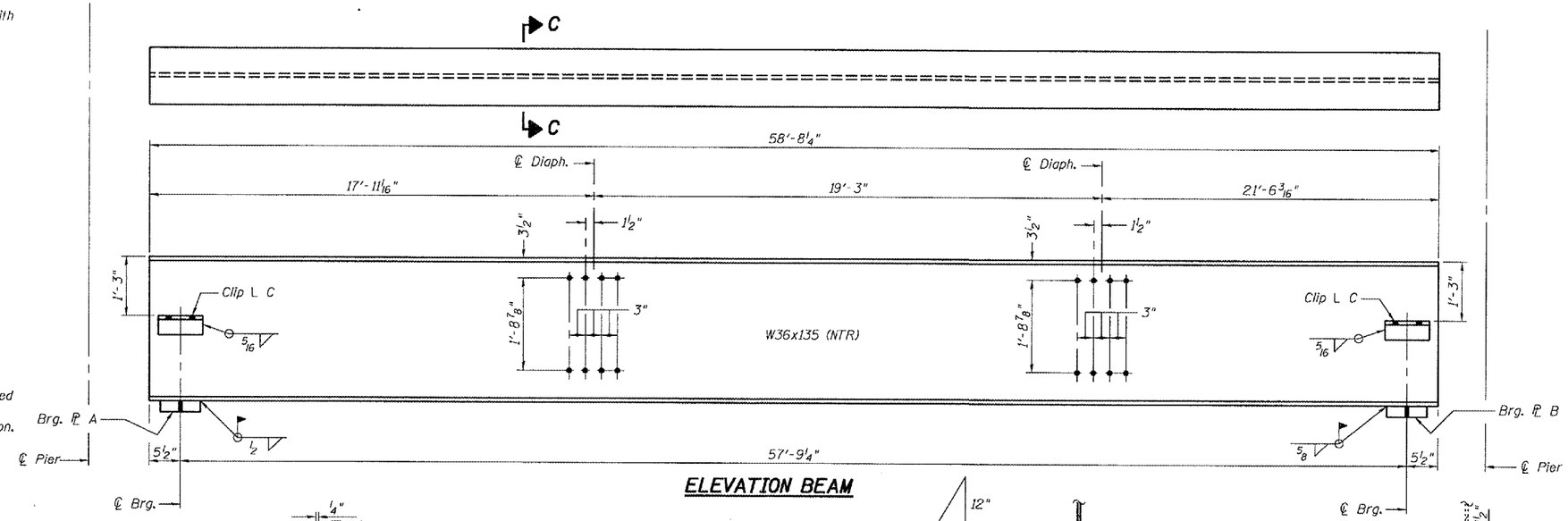

ELEVATION BEAM

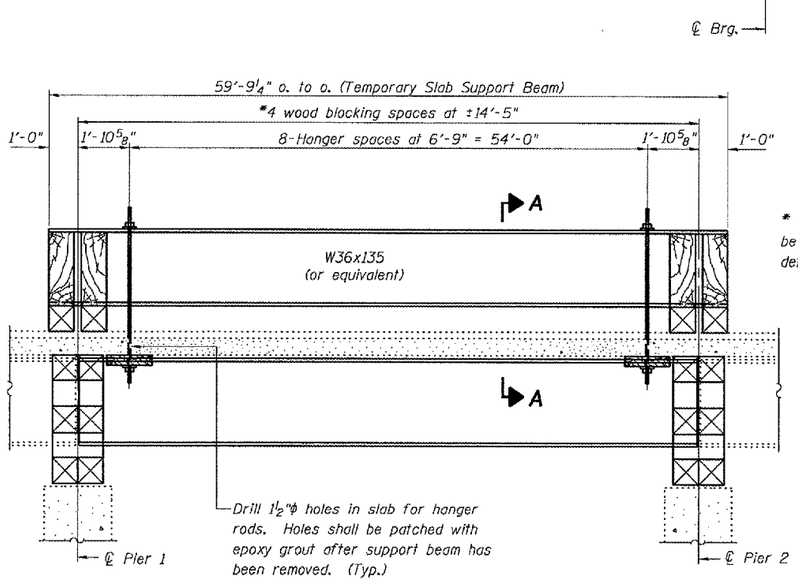

LONGITUDINAL SECTION
SUGGESTED TEMPORARY SLAB SUPPORT SYSTEM

* Wood blocking between piers to be placed after support beam deflects under its own weight.

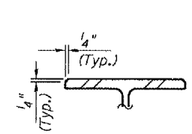

SECTION C-C

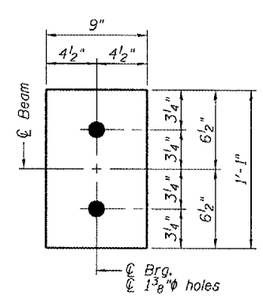

BRG. PL A
(PL 1" X 9" X 1'-1")

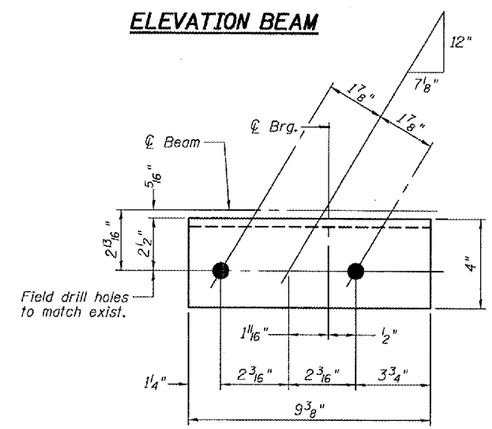

CLIP L C
(L6x4x¾x 9⅜")

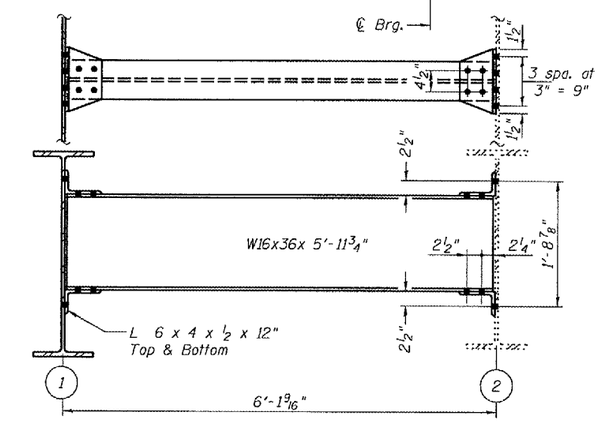

DIAPHRAGM REPLACEMENT DETAIL

Notes: Natural camber of new beam shall be placed upward for fabrication.

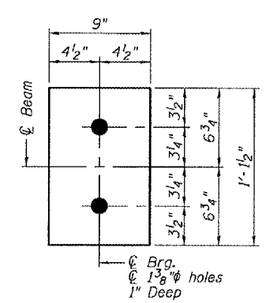

BRG. PL B
(PL 1⅜" X 9" X 1'-1½")

DESIGNED	A.T.H.
CHECKED	A.J.B.
DRAWN	Drew Christopher
CHECKED	A.T.H. A.J.B.

September 6, 2007
EXAMINED [signature] REPAIR PLANS UNIT CHIEF
PASSED Ralph E. Anderson ENGINEER OF BRIDGES AND STRUCTURES

REP-2 1-27-2000

BEAM REPLACEMNT DETAILS
F.A.I. RT. 55
COOK COUNTY
SN 016-0046

SLT-91-001-07

...\projects\mac00034\0160046.dgn 9/6/2007 9:52:43 AM