BAL6	48-1-R	WILL	32	9	SHEET NO 2 9 SHEETS

SHEET NO. 65B

STATE OF ILLINOIS
DEPARTMENT OF TRANSPORTATION

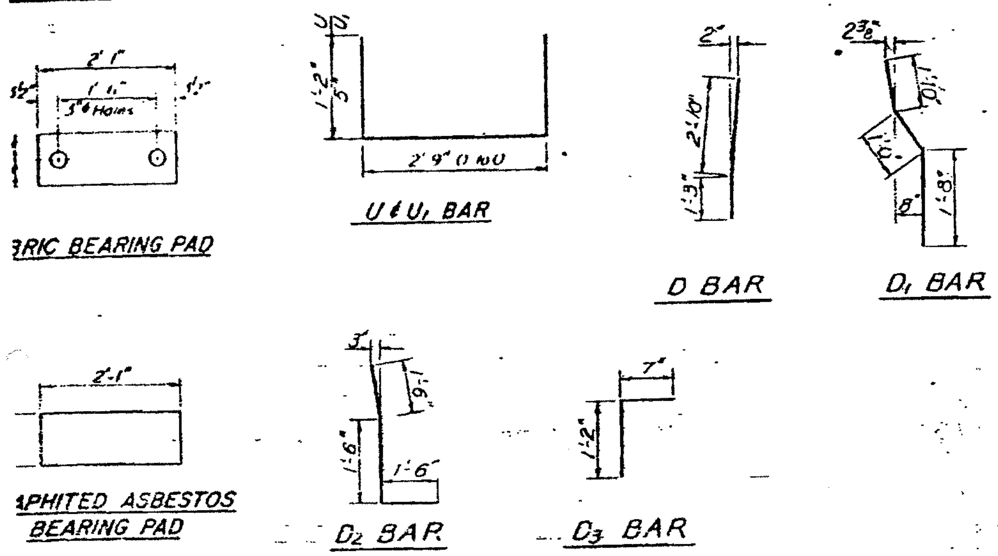

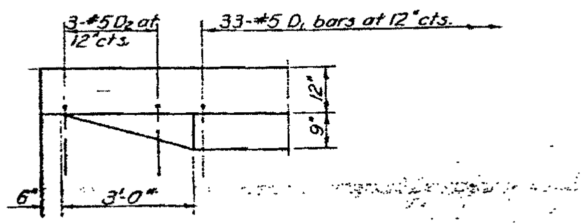

END OF CURB TREATEMENT
(South End of Span 1)
(North End of Span 3)

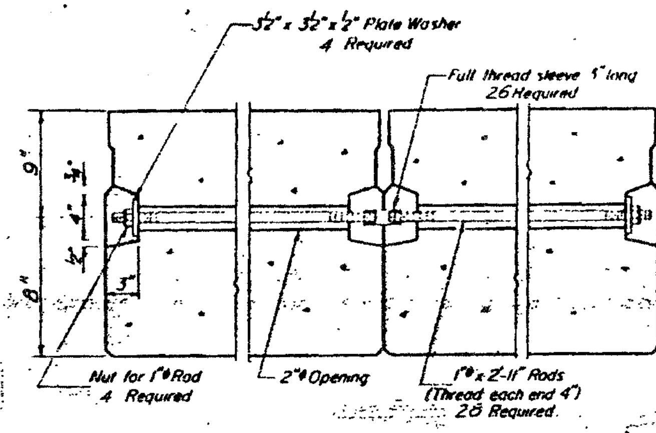

TYPICAL TRANSVERSE TIE ASSEMBLY

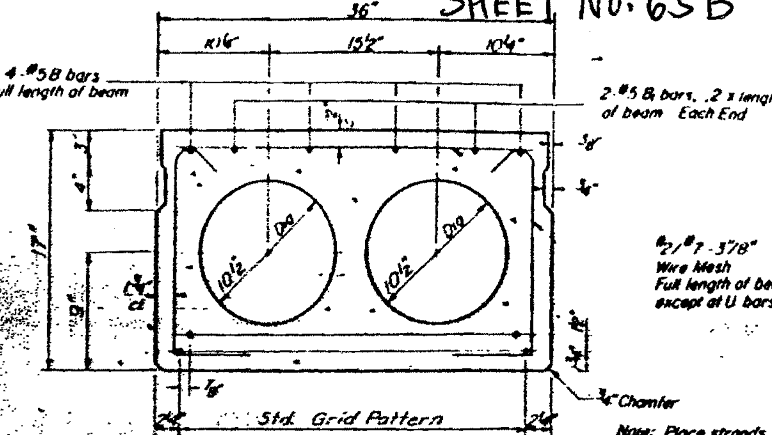

TYPICAL SECTION
14-7/16" ϕ Strands, Each Strand Stressed to 21,700 Lbs
8-Strands 1 3/4" up, 6-Strands 3 3/4" up.

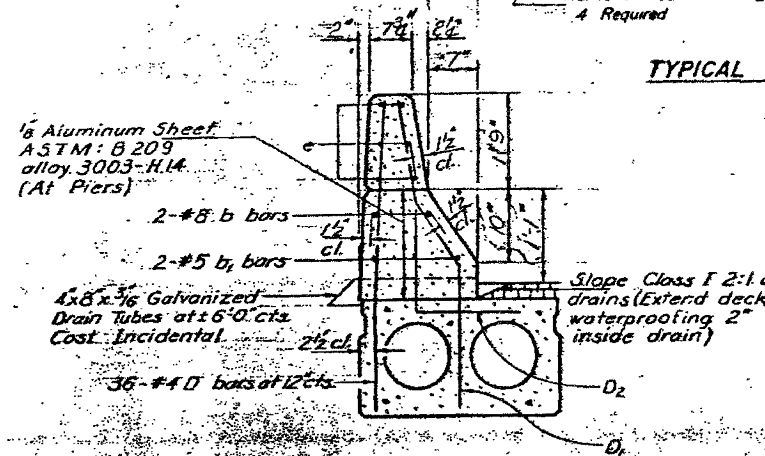

CURB SECTION

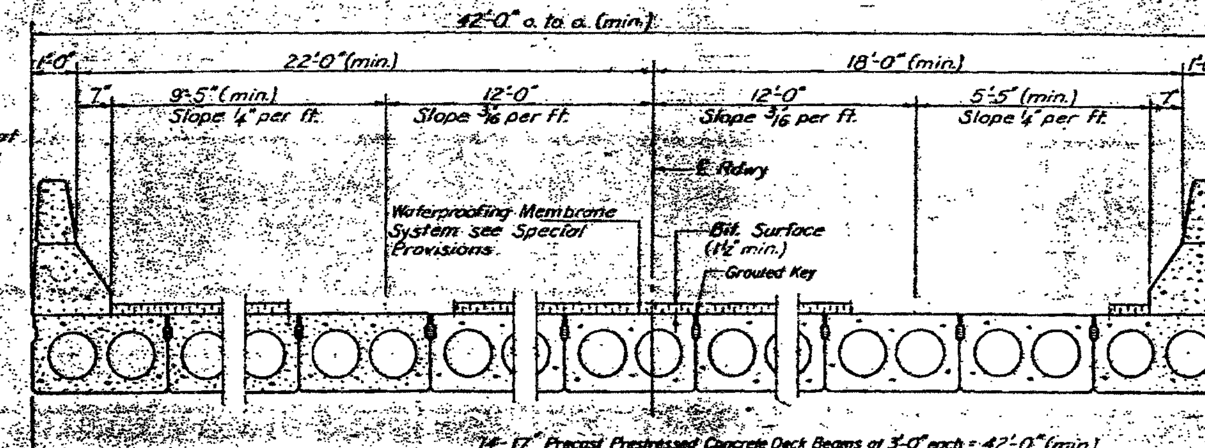

CROSS SECTION
(Looking North)

SOUTHBOUND BRIDGE
STRUCTURE No. 099-0242
EXISTING PLANS

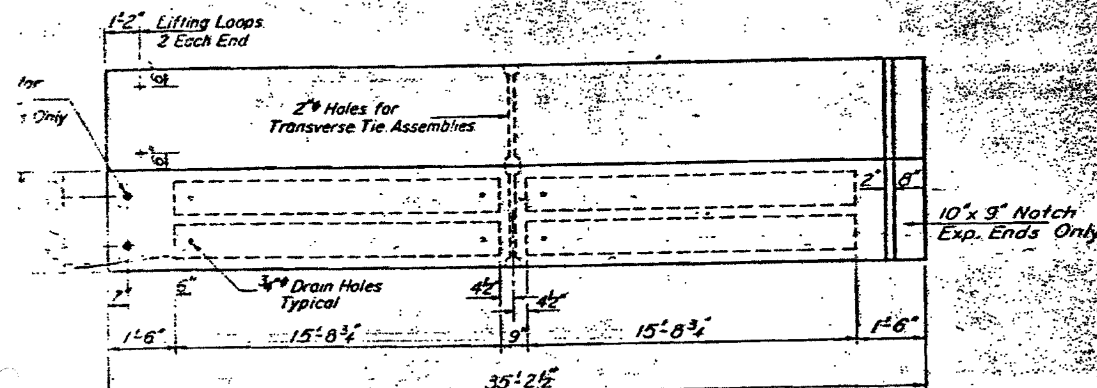

PLAN

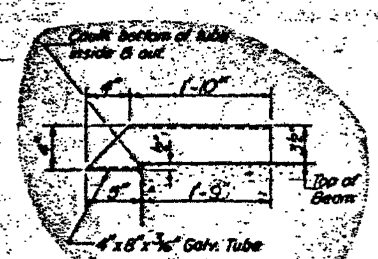

DRAIN DETAIL

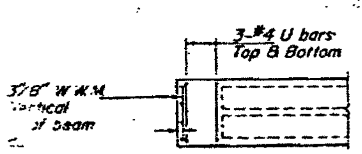

END PLAN (FIXED END)

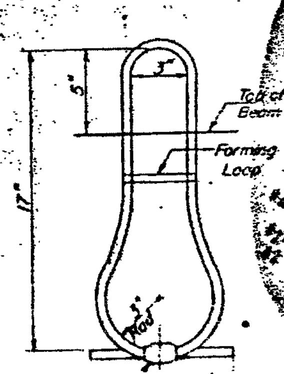

LIFTING LOOP DETAIL

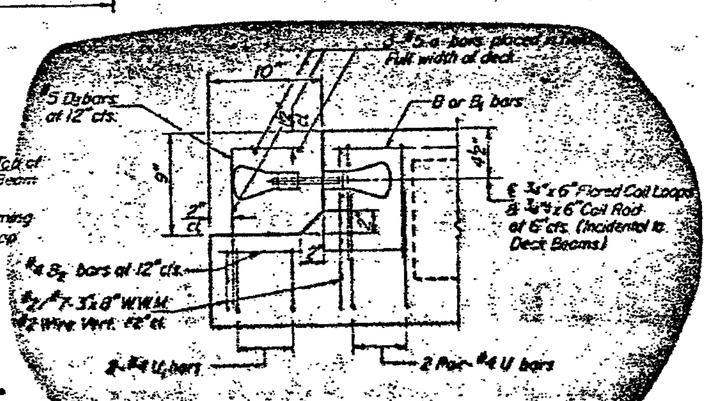

END OF BEAM (EXP. END)
(Dimensions are at right angles)

NOTES

Prestressing steel shall be non-galvanized high strength, stress-relieved 7-wire strand, Grade 270. The nominal diameter shall be 7/16" and the nominal cross-sectional area shall be 0.115 sq in.

Lifting loops shall be 1/2" diameter, 6 x 25 class wire rope with fiber core and shall have a minimum ultimate tensile strength of 21,000 lbs.

The 1" ϕ rods in the transverse tie assembly shall be tightened to a snug fit and the threads set. Pockets that receive transverse tie bar on outside shall be filled with grout after transverse tie assembly is in place.

Longitudinal shear keys shall be packed with a very dry mix of 2:1 sand and PC mortar.

After beams have been erected, holes for the dowel anchors shall be drilled into the substructure and the anchor dowels shall be grouted in place.

Cost of reinforcement and accessories cast into the beam, of bearing pads, of armor angles, and of grouting longitudinal shear keys is included in unit price bid for "Precast Prestressed Concrete Deck Beams."

FOR REFERENCE ONLY

BILL OF MATERIAL

Bar	No	Size	Length	Shape
a	6	#5	41'-5"	——
b	8	#8	34'-11"	——
b1	8	#5	34'-11"	——
Precast Prestressed Concrete Deck Beams (17")			Sq. Ft.	2958
Class X Concrete			Cu. Yds.	10.8
Reinforcement Bars			Lbs.	1300

Parapet Reinforcement and Class X Concrete are billed on Sheet 5

SUPERSTRUCTURE SPANS 1 & 3
F.A. RT. 5 SEC. 48-1-R
WILL COUNTY

DESIGNED	Ahn Lee
CHECKED	
DRAWN	
CHECKED	Lee

EXAMINED April 22 1975
PASSED
APPROVED
ENGINEER OF BRIDGES AND TRAFFIC STRUCTURES
BUREAU OF HIGHWAYS