CONTRACT NO. 64237

F.A.S. RTE.	SECTION	COUNTY	TOTAL SHEETS	SHEET NO.
*2079	**	CARROLL&OGLE	231	17
STA.		TO STA.		
FED. ROAD DIST. NO.	ILLINOIS	FED. AID PROJECT		

*(US 52) **(16,17,18)RS-3 & (16BR)M-1

TYPICAL SECTIONS

TAYLOR STREET

STA 997+84.07 - STA 999+61.82

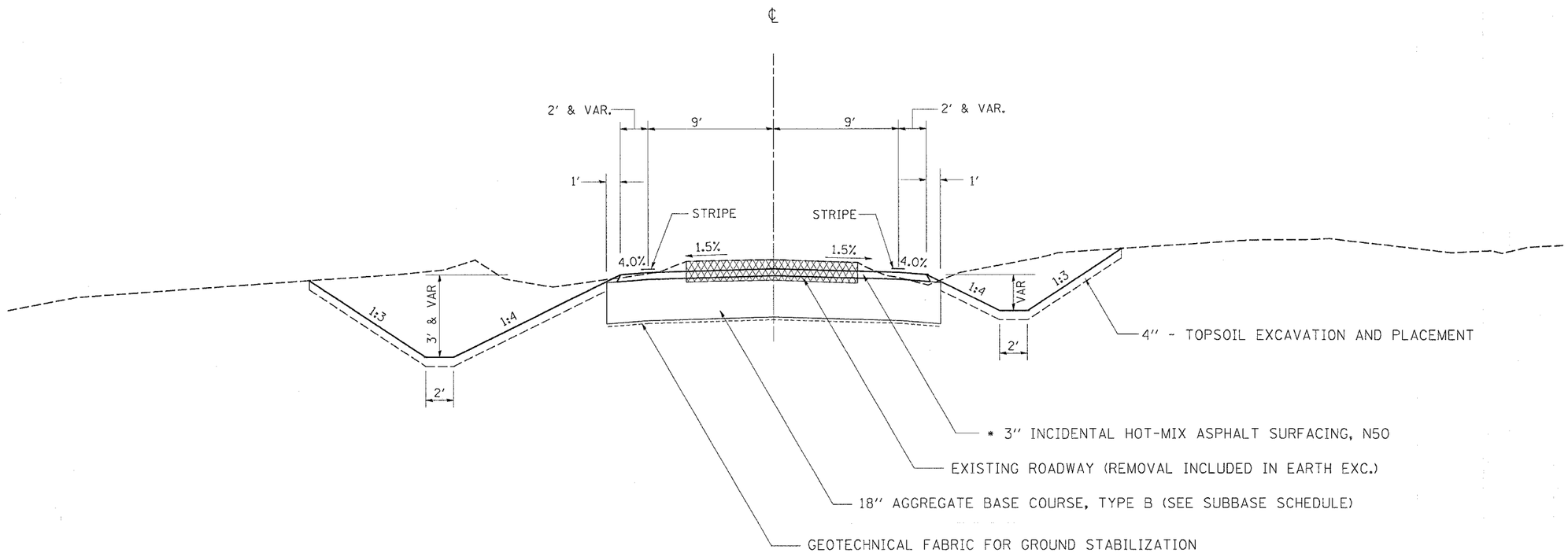

NOTES:

* RATE OF APPLICATION = 112 LB/SQ YD/IN

PLOT DATE = Wed Mar 07 13:42:14 2007
FILE NAME = c:\pwproj\acts\u202585\u202585ypo.dgn
PLOT SCALE = 20.000 ' / IN.
REFERENCE = REF