STATE OF ILLINOIS
DEPARTMENT OF TRANSPORTATION

ROUTE NO.	SECTION	COUNTY	TOTAL SHEETS	SHEET NO.
1545	•	DUPAGE	97	36
FED. ROAD DIST. NO.		ILLINOIS	FED. AID PROJECT-	

SHEET NO. - 15
39 - SHEETS
• 00-00115-00-BR
CONTRACT NO. 83961

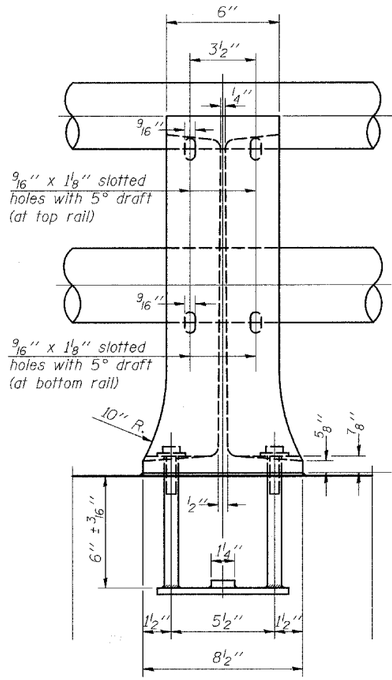

VIEW B-B

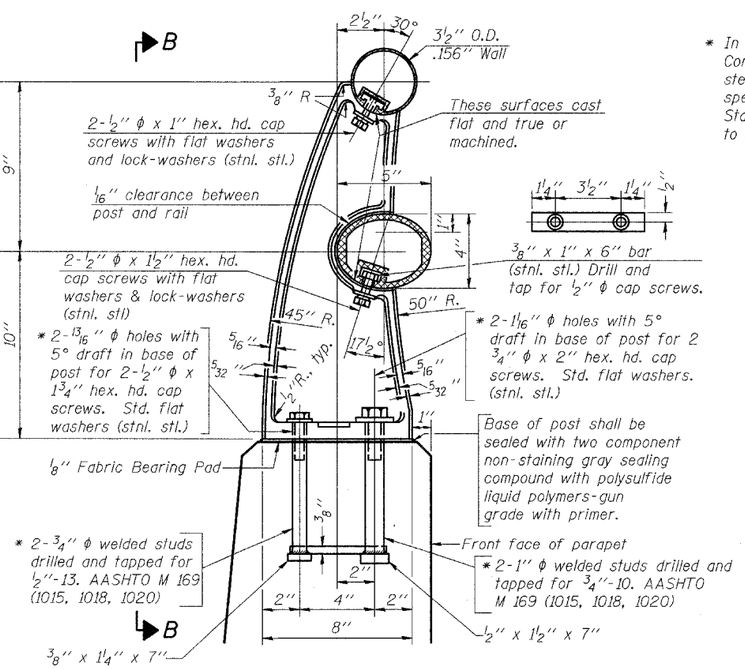

SECTION A-A

RAIL POST DETAILS

* In lieu of the cast-in-place anchor device shown, the Contractor has the option of drilling and setting stainless steel anchor rods of the same diameter and grade as the specified cap screws according to Article 509.06 of the Standard Specifications. Embedment shall be according to the manufacturer's specifications.

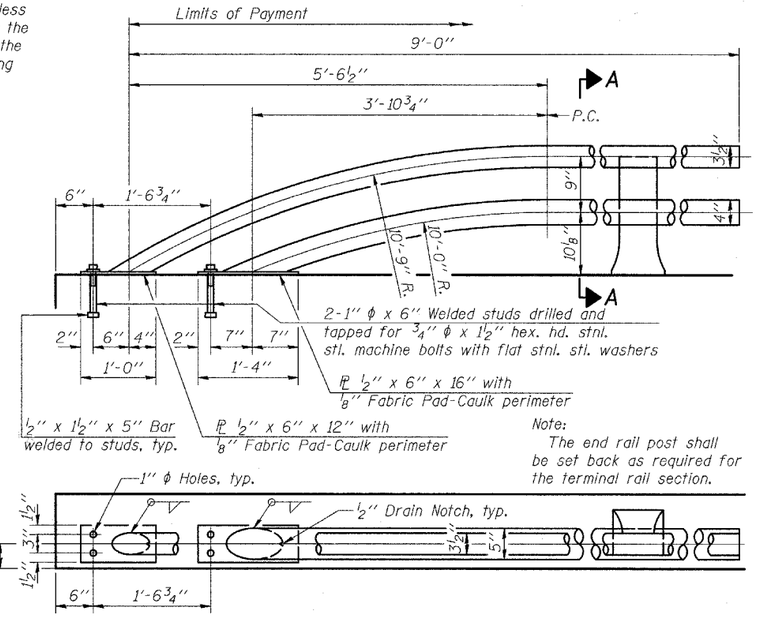

Note:
The end rail post shall be set back as required for the terminal rail section.

RAIL TERMINAL SECTION

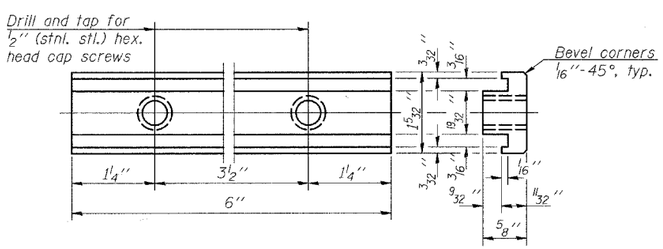

RAIL POST CLAMP BAR
For Top Rail

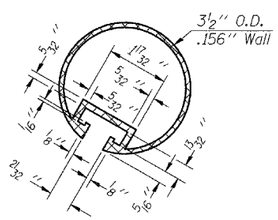

SECTION THRU TOP RAIL

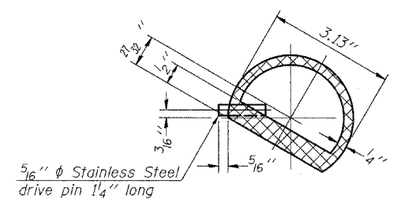

SECTION THRU SPLICE
For Top Rail

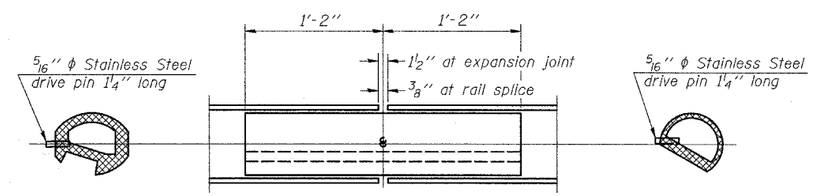

BOTTOM RAIL

RAIL SPLICE

TOP RAIL

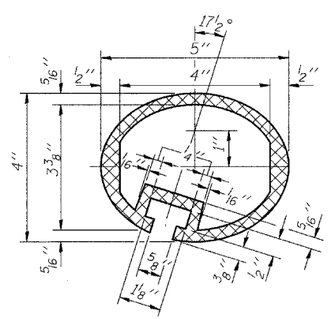

SEC. THRU ELLIPTICAL RAIL SECTION

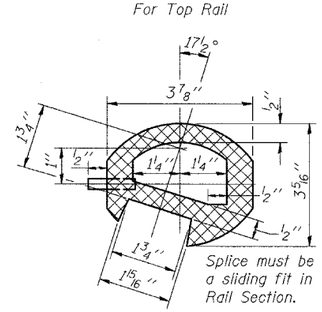

SEC. THRU SPLICE

BILL OF MATERIAL

Item	Unit	Quantity
Aluminum Railing, Type L	Foot	154

Notes:
All Posts shall be normal to parapet.
All joints in rail shall be spliced per detail.
Provide 1-⅛" and 2-1/16" Aluminum Shims for 25% of the Posts. Rail elements shall be parallel to Grade-high spots will be ground and low spots shimmed.
See Sheet 13, 23 & 26 for rail post spacing.

TYLIN INTERNATIONAL

DESIGNED	SNB
CHECKED	SP
DRAWN	SNB
CHECKED	SP

ALUMINUM RAILING, TYPE L

BAILEY ROAD OVER THE
WEST BRANCH OF THE DUPAGE RIVER
FAU 1545
SECTION 00-00115-00-BR STA. 2+99.15
DUPAGE COUNTY
S.N. 022-3028