ROUTE NO.	SECTION	COUNTY	TOTAL SHEETS	SH N
F.A.S. 2111	01-00268 -00-BR	KANE	70	2
FED. ROAD DIST. NO.		ILLINOIS	CONTRACT NO. 8397	

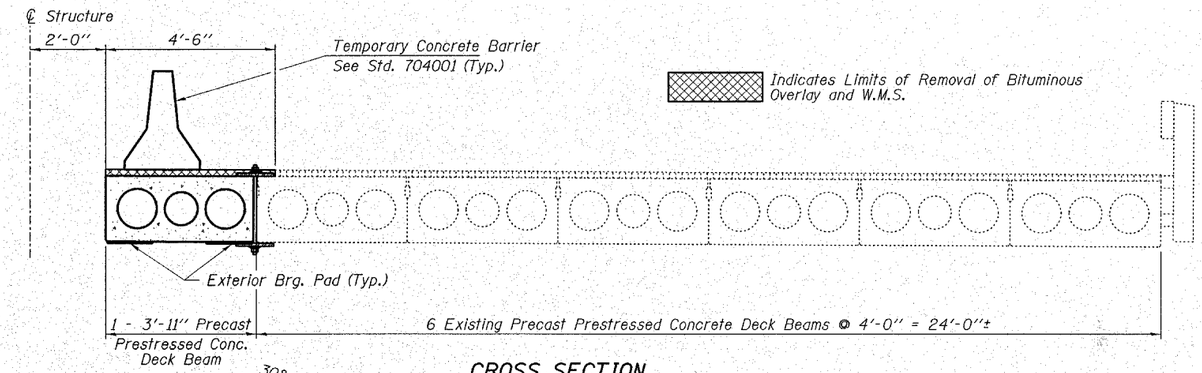

CROSS SECTION

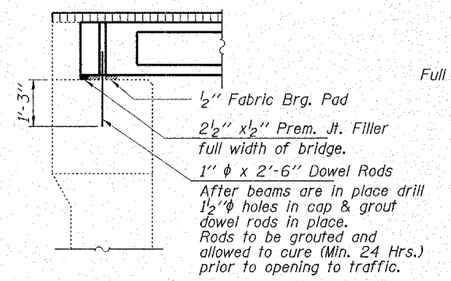

SECTION AT ABUTMENTS

@ Rt. L's

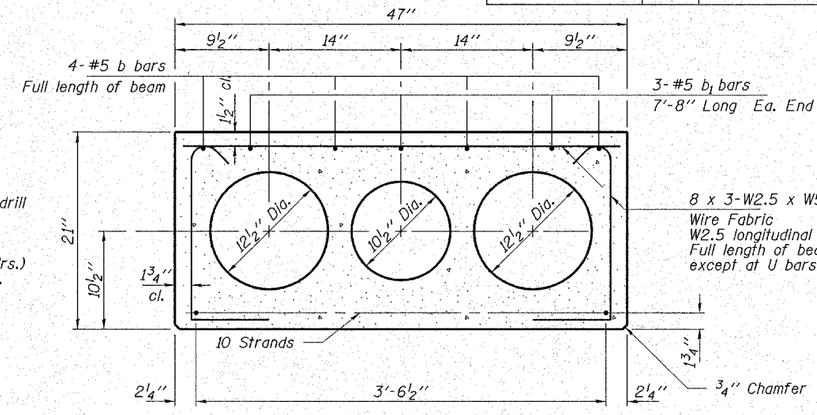

TYPICAL SECTION

10-½"ϕ Strands, Each Strand Stressed to 30,900 Lbs.
10-Strands 1¾" up
Expected Camber = ½"

Note: Place strands symmetrically about ℄ of beam.

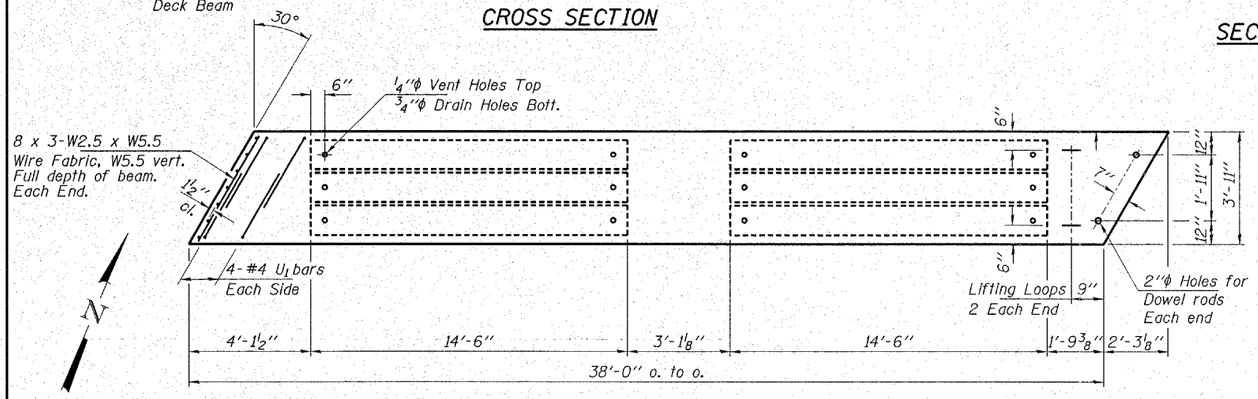

PLAN

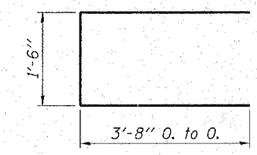

BAR U

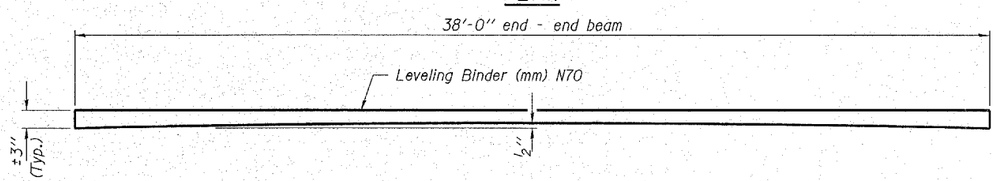

ANTICIPATED INITIAL CAMBER DIAGRAM

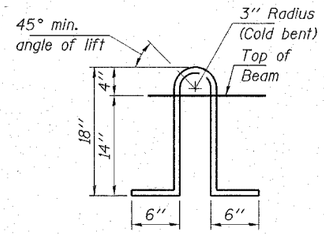

LIFTING LOOP DETAIL

Approved alternate may be substituted for the above detail.

Note:
The loop shall be formed in a manner such that all strands are engaged during lifting. Loops shall be burned off after the beams have been erected.

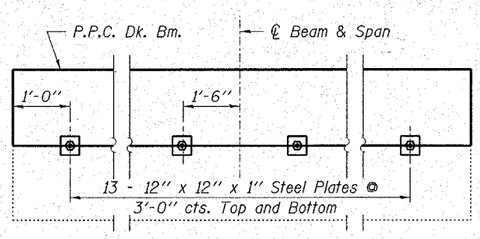

PLAN

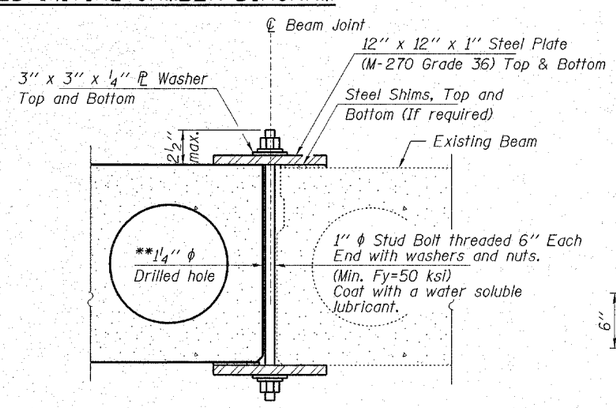

SECTION

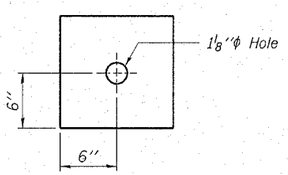

CLAMPING PLATE

SHEAR KEY CLAMPING DETAILS AT STAGE CONST. JT.

**As an alternate to the drilled holes, the Contractor may request the Fabricator to cast 2" diameter semi-circular recesses in the sides of each beam adjacent to the stage construction line. These recesses should align to form a hole at the appropriate locations for the clamping device bolts. If the Contractor elects to use this alternate, the details shall be identified on the shop drawings.

Notes:
Cost of shear clamping detail included with Precast Prestressed Concrete Deck Beams.
See Stage Construction Details for traffic lanes.

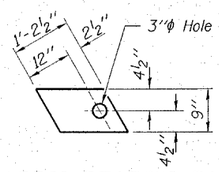

FABRIC BEARING PAD

(Exterior - 4 Req'd)

NOTES

Prestressing steel shall be uncoated high strength, low-relaxation 7-wire strand, Grade 270. The nominal diameter shall be ½" and the nominal cross-sectional area shall be 0.153 sq. in.
Lifting loops shall be 2-½"ϕ-270 ksi strands, as shown.
Reinforcement bars shall conform to the requirements of ASTM A 706 Gr 60 (IL Modified). See Special Provisions.
The bearing seat surfaces shall be adjusted by shimming to assure firm and even bearing. Two ⅛" fabric adjusting shims of the dimensions of the Exterior Bearing Pad shall be provided for each bearing.
Keyway surfaces shall be cleaned to remove form oil or other bond breaking material prior to shipment of the beams. Cleaning shall be done by sandblasting the keyway areas between top of the beam and the bottom edge of the key.
The top surface of the beams shall be finished according to the IDOT Manual for fabrication of Precast Prestressed Concrete Products.
Removal of existing beam, waterproofing membrane and H.M.A. surface shall be included in the cost of Removal of Existing Structures.
Required Release Strength, f'ci, shall be 4,000 p.s.i.
Transverse Ties are not required. Keyways are not required.
See Roadway Quantity Schedule for Leveling Binder Quantity.

BILL OF MATERIAL

ITEM	UNIT	QUANTITY
Precast Prestressed Concrete Deck Beams (21" Depth)	Sq. Ft.	149

HAMPTON, LENZINI & RENWICK, INC.
CIVIL & STRUCTURAL ENGINEERS
LAND SURVEYORS
3085 STEVENSON DRIVE, SUITE 201
SPRINGFIELD, ILLINOIS 62703
(217) 546-3400
HLR
ELGIN • SPRINGFIELD

PROJECT NUMBER: 12-05-0050-1		DATE: 08/29/07
DESIGNED: R.J.P.	CHECKED: S.W.M.	DRAWN: D.A.B.

TEMPORARY BEAM DETAILS

SECTION 01-00268-00-BR
F.A.S. 2111 / FABYAN PARKWAY
KANE COUNTY
STATION 18+97 / STRUCTURE NO. 045-3019