CONTRACT NO. 83975

F.A. RTE.	SECTION	COUNTY	TOTAL SHEETS	SHEET NO.
	04-00046-00-WR	KANE	60	3
STA.		TO STA.		
FED. ROAD DIST. NO. 1	ILLINOIS	FED. AID PROJECT		

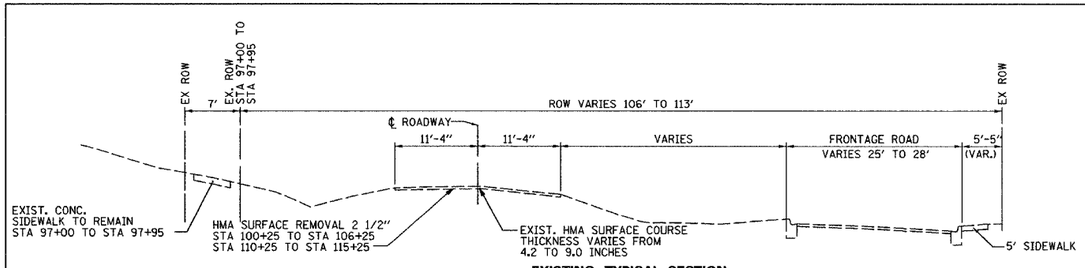

EXISTING TYPICAL SECTION
STA. 97+00 TO STA. 123+37

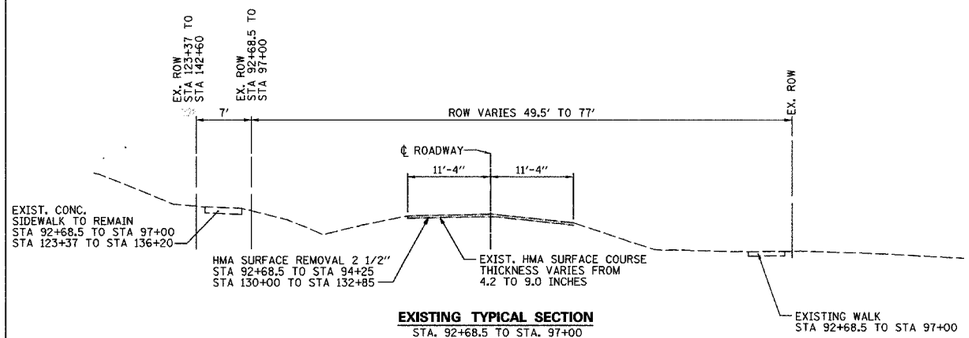

EXISTING TYPICAL SECTION
STA. 92+68.5 TO STA. 97+00
STA. 123+37 TO STA. 142+60

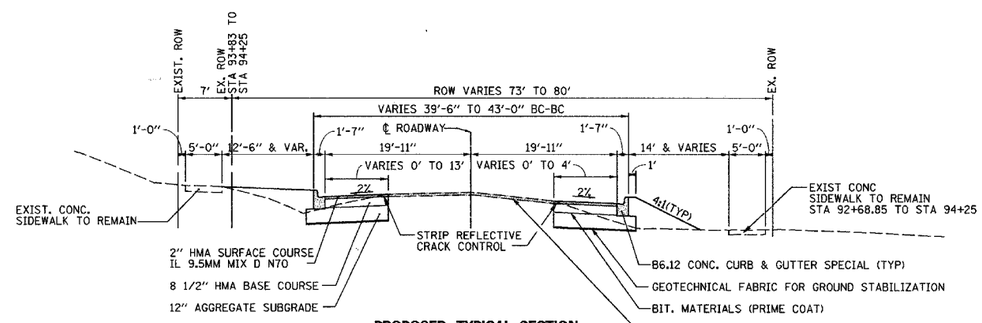

PROPOSED TYPICAL SECTION
STA. 92+68.5 TO STA. 94+25
STA. 130+00 TO STA. 132+85

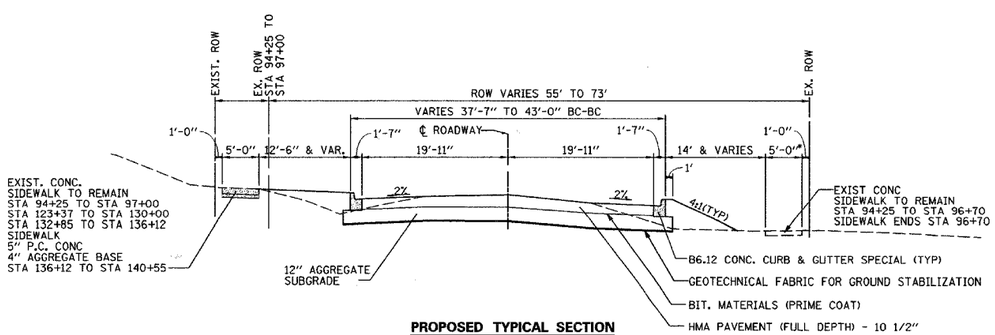

PROPOSED TYPICAL SECTION
STA. 94+25 TO STA. 97+00
STA. 123+37 TO STA. 130+00
STA 132+85 TO STA 141+43

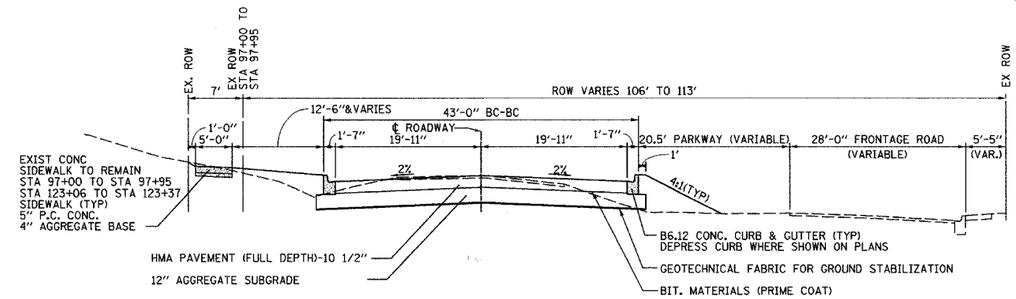

PROPOSED TYPICAL SECTION
STA 97+00 TO STA 100+25
STA 106+25 TO STA 110+25
STA 115+25 TO STA 123+37

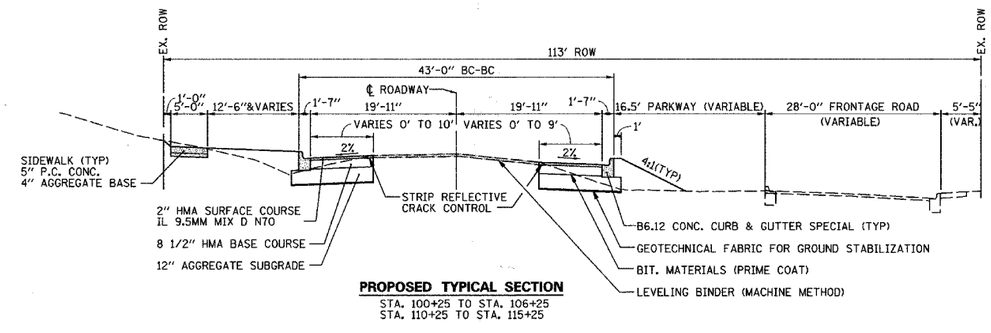

PROPOSED TYPICAL SECTION
STA. 100+25 TO STA. 106+25
STA. 110+25 TO STA. 115+25

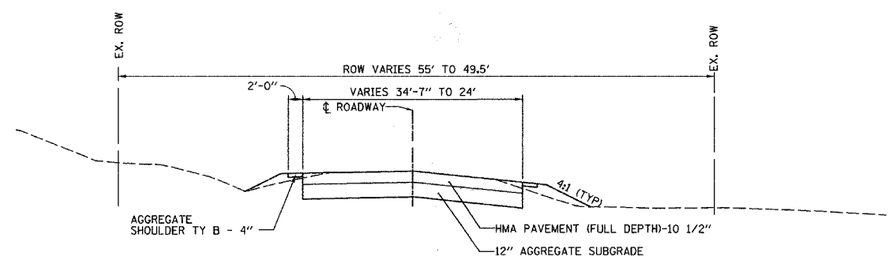

PROPOSED TYPICAL SECTION
STA. 141+43 TO STA 142+60

HOT MIX ASPHALT MIXTURE REQUIREMENT

MIXTURE TYPE	AC TYPE	VOIDS
FULL DEPTH PAVEMENT, 10 1/2"		
HOT MIX ASPHALT SURFACE COURSE, MIX "D", N70 (IL 9.5 mm); 2"	PG 64-22	4% @ 70 GYR
HOT MIX ASPHALT BINDER COURSE, IL-19.0, N70; 8 1/2"	PG 64-22*	4% @ 70 GYR
PAVEMENT RESURFACING		
HOT MIX ASPHALT SURFACE COURSE, MIX "D", N70 (IL 9.5 mm); 2"	PG 64-22	4% @ 70 GYR
LEVELING BINDER (MACHINE METHOD), N70; 3/4"	PG 64-22*	4% @ 70 GYR
HOT MIX ASPHALT BINDER COURSE, IL-19.0, N70** (MIN THICKNESS 2 1/4")	PG 64-22*	4% @ 70 GYR
PAVEMENT WIDENING		
HMA BASE COURSE, (HMA BINDER IL-19 mm); 8 1/2"	PG 64-22*	4% @ 50 GYR
PATCHING		
CLASS D PATCHES (HMA BINDER IL 19 mm), 8"	PG 64-22*	4% @ 70 GYR
DRIVEWAYS		
HMA SURFACE COURSE, MIX C, N50 (IL 9.5 mm); 2"	PG 64-22*	4% @ 50 GYR
HMA BASE COURSE, (HMA BINDER IL-19 mm); 2 1/4"	PG 64-22*	4% @ 50 GYR

THE UNIT WEIGHT USED TO CALCULATE ALL HMA SURFACE MIXTURE QUANTITIES IS 112 LBS/SQ YD-IN
*WHEN RAP EXCEEDS 20%, THE ASPHALT BINDER IN THE MIX SHALL BE PG 58-22
**USED INSTEAD OF LEVELING BINDER WHEN THE TOTAL RESUFRACING THICKNESS IS GREATER THAN OR EQUAL TO 3 3/4"

TYPICAL SECTIONS

SCALE: VERT. NONE HORIZ. NONE
DRAWN BY: GR
DATE: MAY 2007

PLAN
NOTE BOOK NO.
SURVEYED
PLOTTED
ALIGNMENT CHECKED
RT. OF WAY CHECKED
FIELD FILE NAME
BY
DATE

PROFILE
NOTE BOOK NO.
SURVEYED
PLOTTED
GRADES CHECKED
B.M. NOTED
STRUCTURE NOTATIONS CHKD
BY
DATE

PLOT DATE = 8/30/2007
FILE NAME = N:\dgn\Nh\na197\sheets\na197gp_sections.dgn
PLOT SCALE =
PLOT SCALE =
USER NAME = JJESER.