F.A.U. RTE.	SECTION	COUNTY	TOTAL SHEETS	SHEET NO.
1253	Y-B-R-2	LAKE	17	4
STA.		TO STA.		
FED. ROAD DIST. NO.	ILLINOIS	FED. AID PROJECT		

CONTRACT NO. 62768

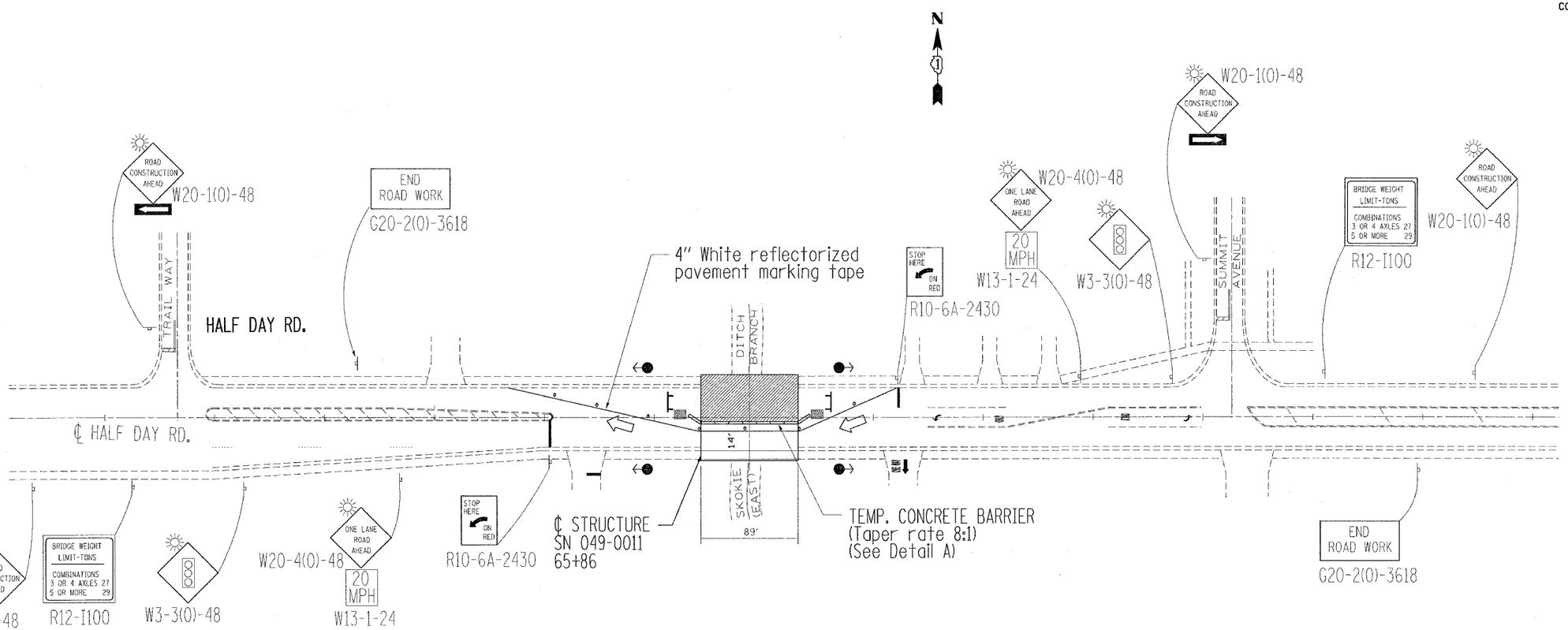

SYMBOLS

- Sign
- Barricade or drum with steady burning light
- Type III barricade with flashing yellow lights
- Impact attenuator
- Work Area
- TRAFFIC SIGNAL

Notes

All existing pavement markings in conflict with construction traffic control shall be covered with black Type III pavement marking

Barricade, barrel and panel spacing shall be 25' centers in taper sections and 50' centers in tangent sections.

Vertical panels shall be used when barrels cannot be placed on the existing pavement or paved shoulder.

Traffic control details shown on this sheet shall be included in the contract lump sum price for "Traffic Control & Protection (Special)"

Final location for the signs should be determined by the engineer on the field.

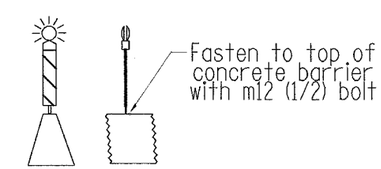

DETAIL A

(Suggested Mounting Detail)

REV 1 10.31.06

REVISIONS	
NAME	DATE

ILLINOIS DEPARTMENT OF TRANSPORTATION

TRAFFIC STAGING PLANS - STAGE I
HALF DAY RD OVER
E. BRANCH SKOKIE DITCH
SN 049-0011

SCALE: NO SCALE
DATE: 10/31/2006
DRAWN BY
CHECKED BY

PLOT DATE = 10/31/2006
FILE NAME = c:\projects\d123404\design_ea.dgn
PLOT SCALE = 50.0000 ' / IN.
USER NAME = hamdaneh