STATE OF ILLINOIS
DEPARTMENT OF TRANSPORTATION

ROUTE NO.	SECTION	COUNTY	TOTAL SHEETS	SHEET NO.
		Lake	17	11
FED. ROAD DIST. NO. 7		ILLINOIS	FED. AID PROJECT-	

SHEET NO. 3
7 SHEETS

Contract Number: 62768

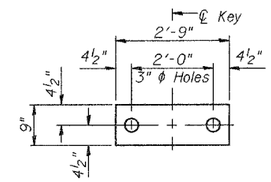

FABRIC BEARING PAD
(Interior)

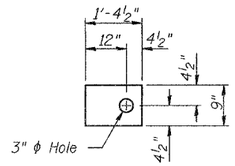

FABRIC BEARING PAD
(Exterior)

FIXED

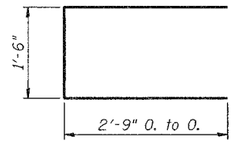

BAR U

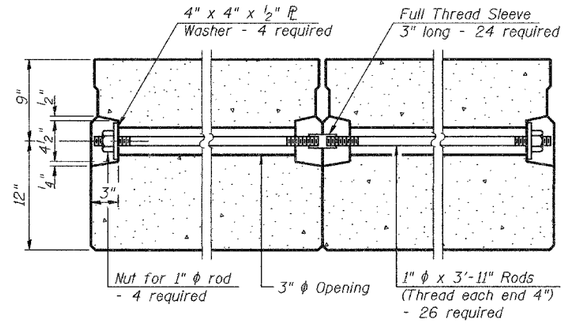

TYPICAL TRANSVERSE TIE ASSEMBLY

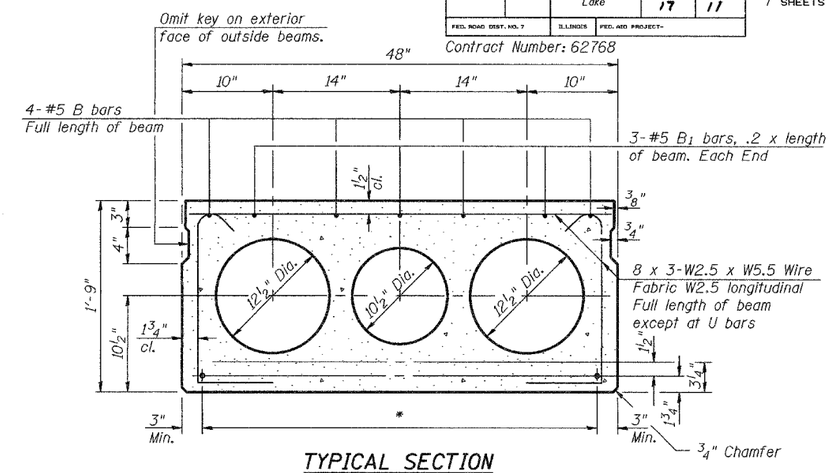

TYPICAL SECTION

½" ϕ Strands, Each Strand Stressed to 30,900 Lbs.
8-Strands 1¾" up, 7-Strands 3¼" up

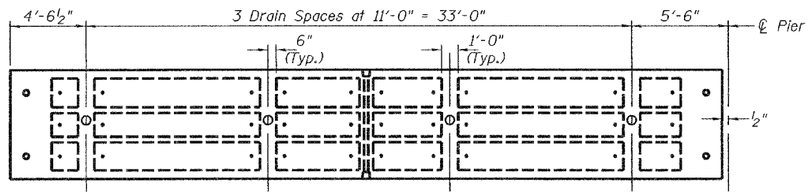

BEAM PLAN SHOWING DRAINS
(Beams 2 and 12)

* TRANSVERSE PLACEMENT GUIDELINES

1. Place strands symmetrically about centerline of beam.
2. The minimum distance from center to center of strands in all directions shall be 2".
3. The minimum clearance from strand to dowel hole shall be ½".
4. The minimum clearance from strand to void shall be 1½".

Vertical placement of strands shall not be adjusted to satisfy the above guidelines.

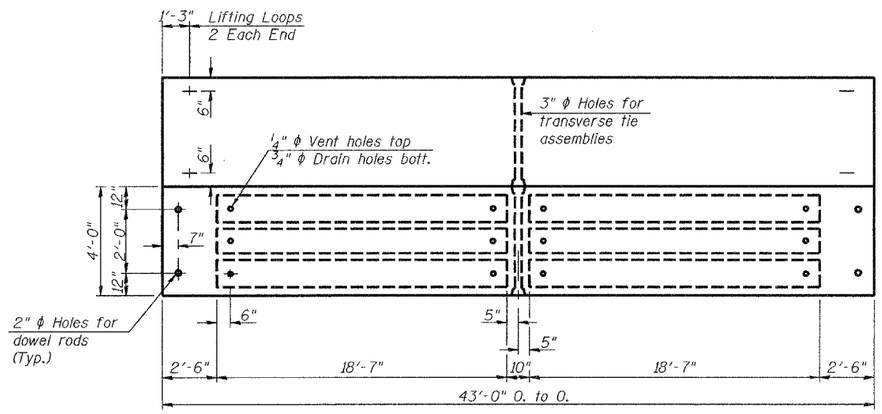

PLAN

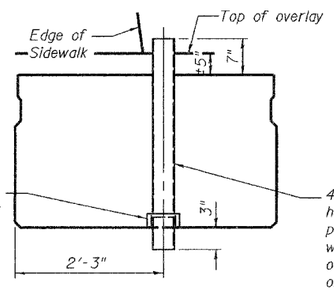

Threaded coupler to accept extension that will extend 3" below bottom of beam as shown.

4"ϕ aluminum, fiberglass or PVC pipe. Bottom of pipe to have threaded coupler to accept pipe extension to be placed after beam installation. Cut off top of pipe flush with top of overlay and grind smooth to just below top of overlay surface. For longitudinal spacing see detail on this sheet.

TYPICAL DRAIN SECTION
(Beams 2 and 12)

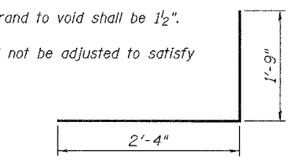

Bar D(E)

BILL OF MATERIAL

Bar	No.	Size	Length	Shape
Precast Prestressed Conc. Deck Bms.			Sq. Ft.	4,476

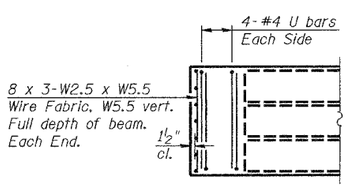

END PLAN

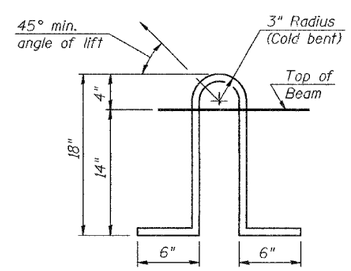

LIFTING LOOP DETAIL

NOTES

Prestressing steel shall be uncoated high strength, low relaxation 7-wire strand, Grade 270.
The nominal diameter shall be ½" and the nominal cross-sectional area shall be 0.153 sq. in.
Lifting loops shall be 2 - ½" ϕ-270 ksi strands, as shown.
The 1" ϕ rods in the transverse tie assembly shall be tightened to a snug fit and the threads set. Pockets that receive transverse tie bar on outside shall be filled with grout after transverse tie assembly is in place.
The bearing seat surfaces shall be adjusted by shimming to assure firm and even bearing. Two ⅛" fabric adjusting shims of the dimensions of the Exterior Bearing Pad shall be provided for each bearing.
Keyway surfaces shall be cleaned to remove form oil or other bond breaking material prior to shipment of the beams. Cleaning shall be done by sandblasting the keyway areas between top of the beam and the bottom edge of the key.
Corrosion Inhibitor, as covered in the Special Provisions, shall be used in the concrete for precast prestressed concrete deck beams.
Required Release Strength, f'ci, shall be 4,000 p.s.i.
See sheet 5 of 7 for Rail Anchor Locations.

DESIGNED A.T.H.
CHECKED S.J.B.
DRAWN Drew Christopher
CHECKED A.T.H. S.J.B.

September 21, 2006
EXAMINED John A. Morris
ENGINEER OF STRUCTURAL SERVICES
PASSED Ralph E. Anderson
ENGINEER OF BRIDGES AND STRUCTURES

PD-4-S 10-22-04

SLT-91-001-06

DECK BEAM DETAILS
F.A.U. RT. 1253
HALF DAY RD / EAST
BRANCH OF SKOKIE DITCH
LAKE COUNTY
SN 049-0011

...\wers.cn 8 archive\0490011.dgn 10/27/2006 9:18:07 AM