STATE OF ILLINOIS
DEPARTMENT OF TRANSPORTATION

ROUTE NO.	SECTION	COUNTY	TOTAL SHEETS	SHEET NO.
F.A.I. 39	50-4B	LASALLE		188
FED. ROAD DIST. NO. 7		ILLINOIS	FED. AID PROJECT-	

SHEET NO. 188
313 SHEETS

Contract # 66586

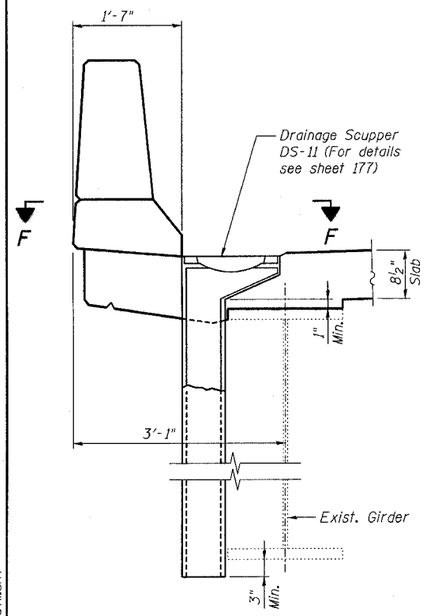

SECTION THRU PARAPET
(Showing Scupper located over Flanges = 16" to 18")
(Bars not shown for clarity)

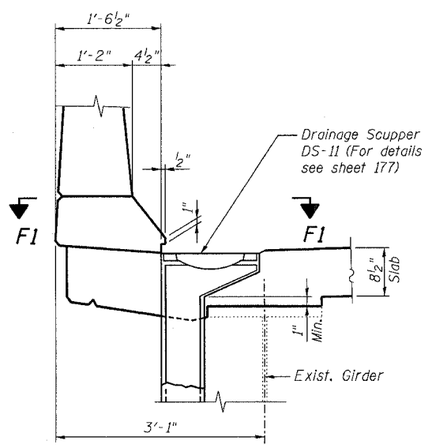

SECTION THRU PARAPET
(Showing Scupper located over Flanges = 20")
(Bars not shown for clarity)

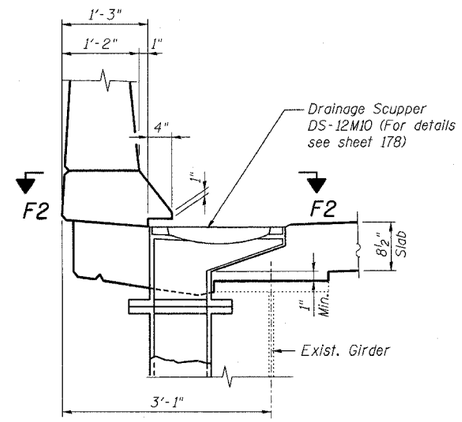

SECTION THRU PARAPET
(Showing Scupper located over Flanges = 12" to 14")
(Bars not shown for clarity)

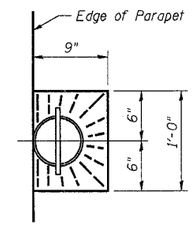

TOP PLAN

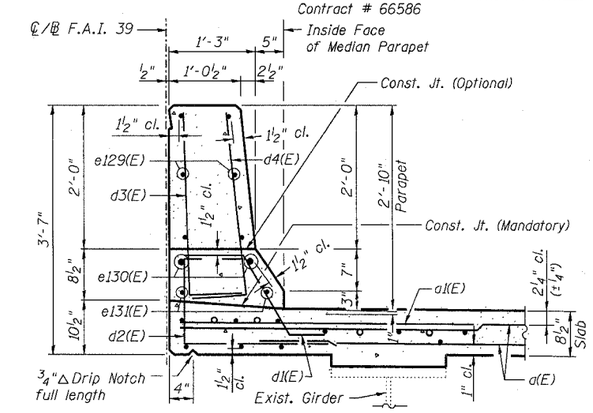

SECTION THRU MEDIAN PARAPET
(Reinforcement near Pier 12 shown - Other locations similar)

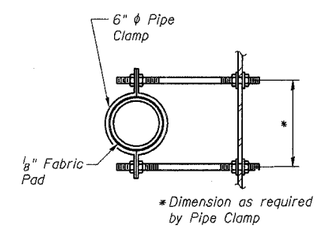

* Dimension as required by Pipe Clamp

SECTION G-G

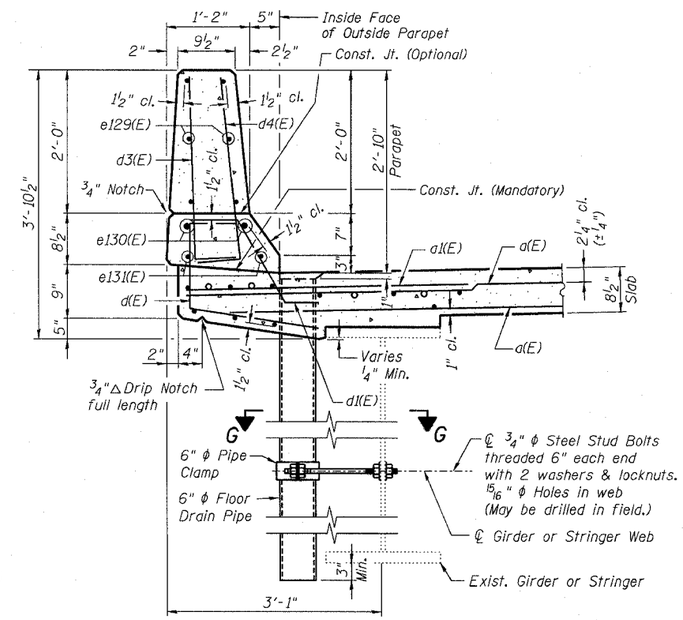

SECTION THRU OUTSIDE PARAPET
Showing Typical Floor Drain - See Note 7
(Reinforcement near Pier 12 shown - other locations similar)

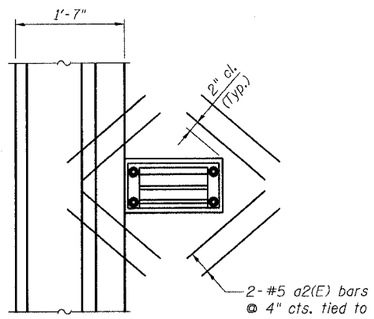

VIEW F-F

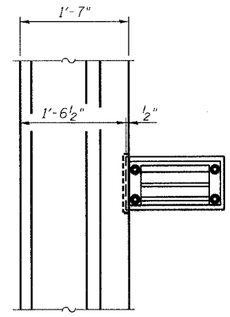

VIEW F1-F1
(Bars not shown for clarity)

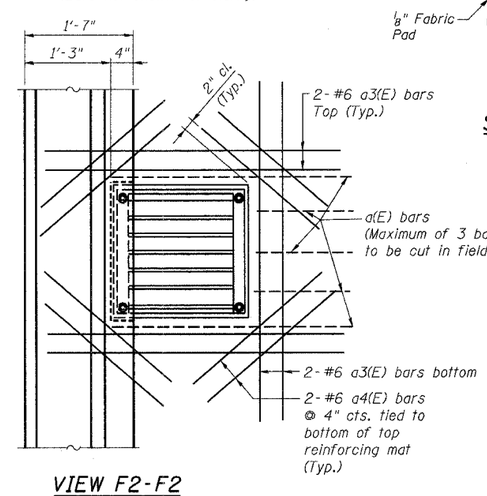

VIEW F2-F2

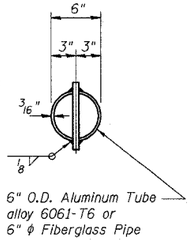

TOP PLAN
(Showing Aluminum Tube)

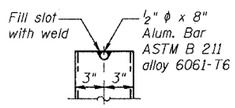

ALUMINUM TUBE

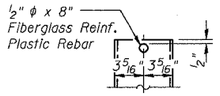

FIBERGLASS PIPE

NOTES:

1. The exterior surfaces of the floor drains shall be painted with the finish coat as specified in the special provisions for Cleaning and Painting New Metal Structures. The exterior surfaces of the drains shall be cleaned according to Steel Structures Painting Council's Spec. SSPC-SP1 prior to painting. Fiberglass pipe shall conform to ASTM D 2996, with short-time rupture strength hoop tensile stress of 30,000 p.s.i. minimum.
2. Reinforcement bars designated (E) shall be epoxy coated.
3. Cut longitudinal deck reinforcement to clear drainage scuppers.
4. Space transverse deck reinforcement to miss Floor Drains and DS-11 Drainage Scuppers.
5. Space d1(E) bars to miss Drainage Scuppers.
6. Work this sheet with sheets 166a thru 169.
7. For Floor Drain detail near Floorbeams in Tied Arch Span, see sheet 166a.

DESIGNED	-	KWS
CHECKED	-	AJK
DRAWN	-	AR/VH
CHECKED	-	MRB

benesch
alfred benesch & company
Engineers • Surveyors • Planners
205 North Michigan Avenue, Suite 2400
Chicago, Illinois 60601
312-565-0450
Job # 3856

DECK DETAILS - 1 OF 5
ABRAHAM LINCOLN MEMORIAL BRIDGE OVER THE ILLINOIS RIVER (PUBLIC WATERS)
F.A.I. ROUTE 39 SEC. (50-4B) BR
LASALLE COUNTY
STATION 863+16.00
STRUCTURE NO. 050-0191 (SB & NB)

x:\3800s\3856\structures\abe lincoln memorial\final\plans\AL_dk01IL.sht 9:03:47 AM 8/30/2006