STATE OF ILLINOIS
DEPARTMENT OF TRANSPORTATION

ROUTE NO.	SECTION	COUNTY	TOTAL SHEETS	SHEET NO.
				336A
FED. ROAD DIST. NO. 7		ILLINOIS	FED. AID PROJECT-	

SHEET NO.
SHEETS
Contract #

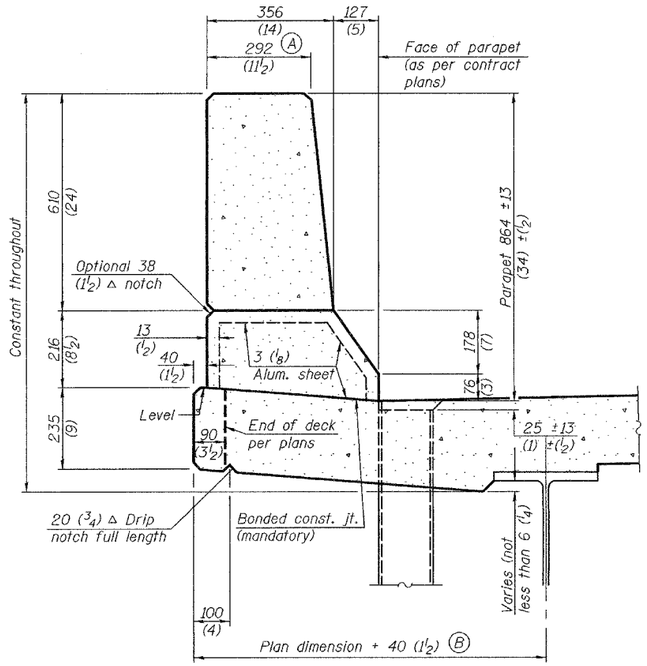

SECTION
(Showing dimensions)

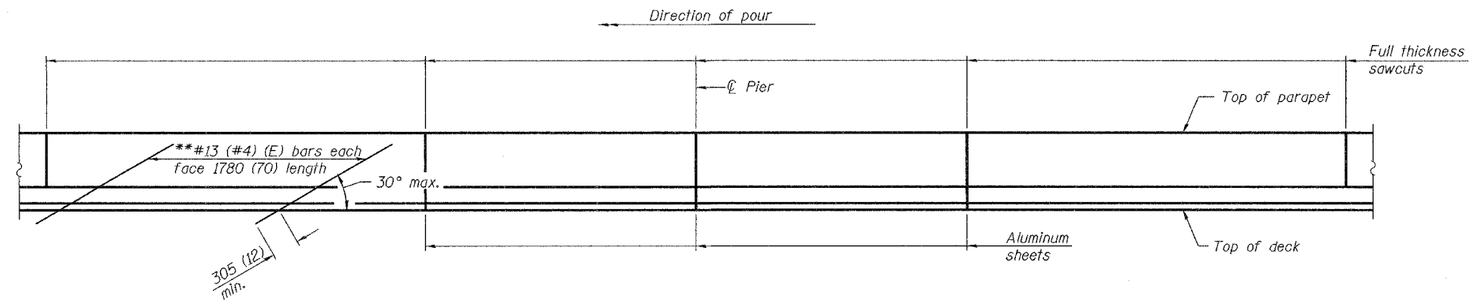

**Optional stiffening reinforcement

ELEVATION
(Showing parapet joints and optional stiffening reinforcement between joints)

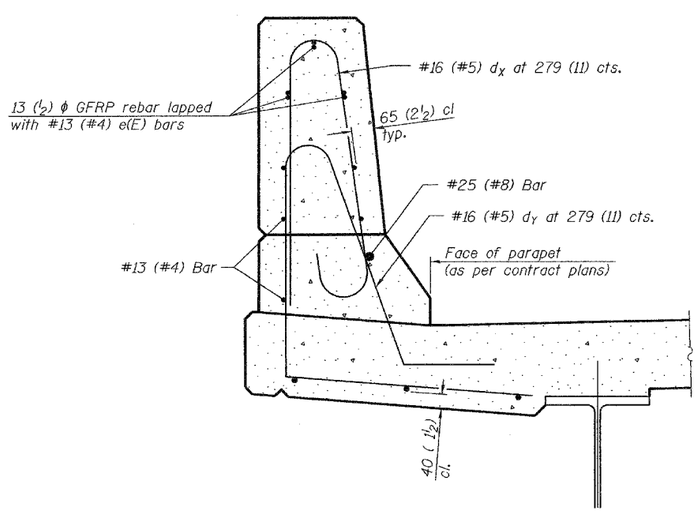

SECTION
(Showing required reinforcement)

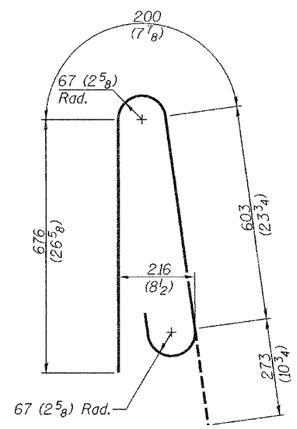

BAR d_x(e)

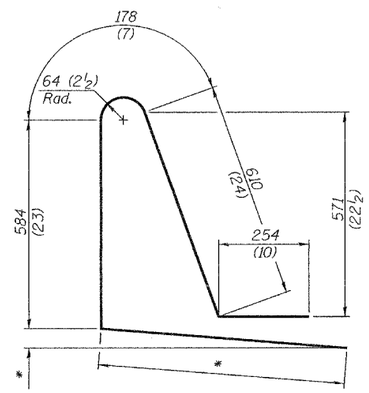

BAR d_y(e)
* Per contract plans

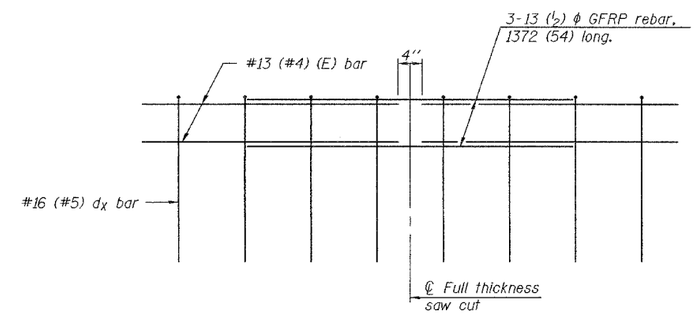

GFRP REBAR STIFFENING DETAIL
(Place as shown in parapet section)

GENERAL NOTES

All dimensions shall remain the same as shown on contract plans, except dimensions A and B which are to be revised as shown to provide additional clearance. Additional concrete needed to revise dimension A and B= 0.0422 m /m (.0165 cu. yds./ft.) of parapet.

Place aluminum sheet in curb portion at and near piers. Full thickness saw cut at all other locations. Adjust/add joint locations to maintain 3 to 6 meter (10 to 20 foot) spacing.

CONCRETE PARAPET SLIPFORMING OPTION

...\bpi_provisions\slip_form.dgn 10/4/2005 3:15:47 PM