F.A.P. RTE.	SECTION	COUNTY	TOTAL SHEETS	SHEET NO.
805	122VBR-1	ST. CLAIR	58	42
STA. N/A		TO STA. N/A		
FED. ROAD DIST. NO. 7	ILLINOIS	FED. AID PROJECT		

Contract #76558 SHEET 17 OF 26

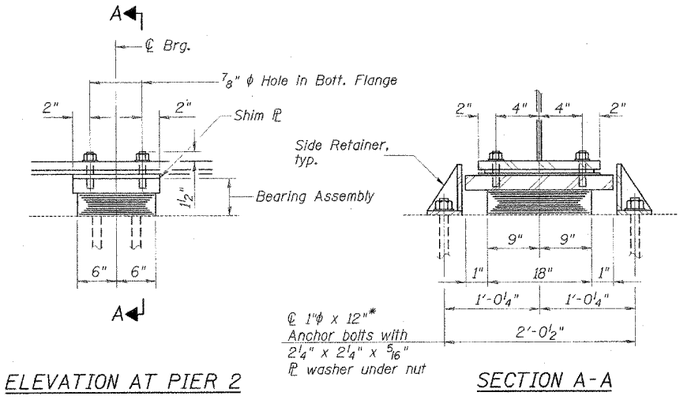

ELEVATION AT PIER 2

SECTION A-A

TYPE I ELASTOMERIC EXP. BRG. - PIER 2

(12 REQUIRED)

Notes:
All bearing plates, pintles & shim plates shall be AASHTO M270 Grade 50.

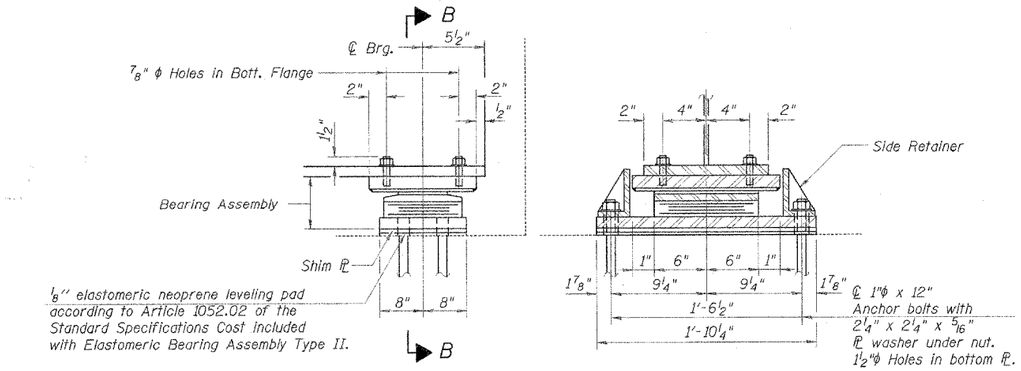

ELEVATION AT EAST ABUT.

SECTION B-B

TYPE II ELASTOMERIC EXP. BRG. - EAST ABUTMENT

(12 REQUIRED)

*Length shown is the required total length for the Illinois Coil Anchor Bolt. The required total length for the sealed capsule alternate anchor bolt shall be according to the manufacturers recommendations.

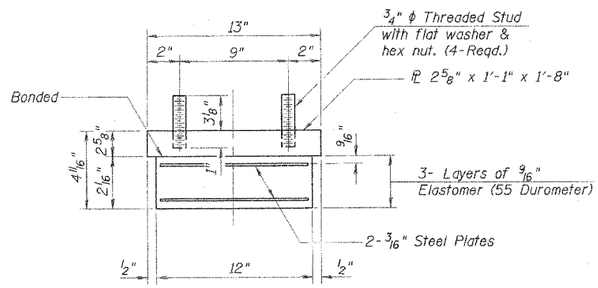

BEARING ASSEMBLY

Note:
Shim plates shall not be placed under Bearing Assembly.

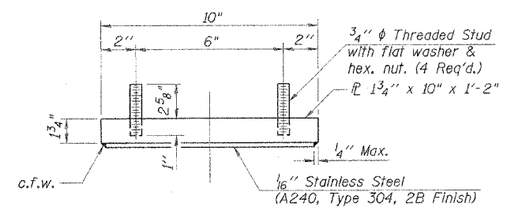

TOP BEARING ASSEMBLY

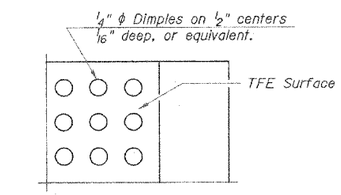

PLAN-TFE SURFACE

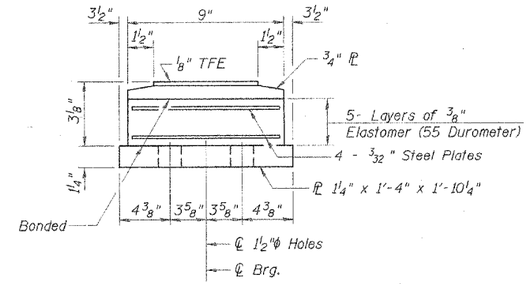

BOTTOM BEARING ASSEMBLY

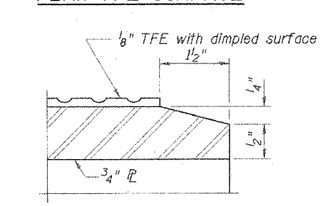

SECTION THRU TFE

Notes:
The 1/8" TFE sheet shall be bonded directly to the top steel plate with a two-component, medium viscosity epoxy resin, conforming to the requirements of the Federal Specification MMM-A-134, Type I. The bond agent shall be applied on the full area of the contact surfaces.
Bonding of 1/8" TFE sheet during vulcanizing process will be permitted provided the process and method of adjusting assembly height is approved by the Engineer.

BILL OF MATERIAL

Item	Unit	Total
Elastomeric Bearing Assembly Type I	Each	12
Elastomeric Bearing Assembly Type II	Each	12

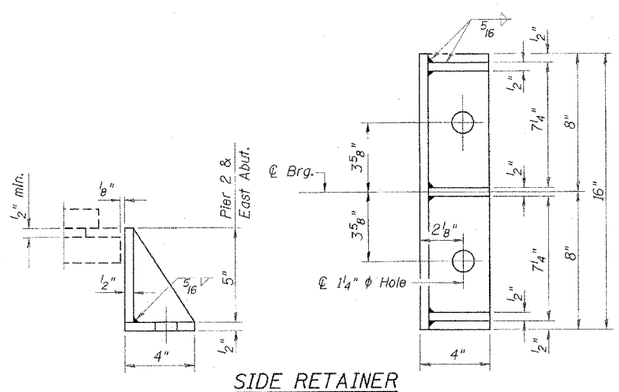

SIDE RETAINER

Equivalent rolled angle with stiffeners will be allowed in lieu of welded plates. Weight included with Structural Steel.

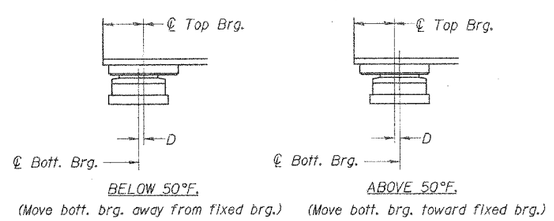

BELOW 50°F.
(Move bott. brg. away from fixed brg.)

ABOVE 50°F.
(Move bott. brg. toward fixed brg.)

SETTING ANCHOR BOLTS AT EXP. BRG.

D=1/8" per each 100' of expansion for every 15° temp. change from the normal temp. of 50°F.

NOTES:

1. Diaphragm removal & reinstallation may be required to facilitate drilling holes. Cost shall be included in the cost of "Furnishing & Erecting Structural Steel".
2. See Sheet 18 of 26 for anchor bolt installation.

REVISIONS	
NAME	DATE

CMT
CRAWFORD MURPHY & TILLY, INC.
CONSULTING ENGINEERS
SPRINGFIELD, IL ■ AURORA, IL ■ ST. LOUIS, MO
ROCKFORD, IL ■ PEORIA, IL ■ CHICAGO, IL

ILLINOIS DEPARTMENT OF TRANSPORTATION

BEARINGS DETAILS 2

F.A.P. ROUTE 805
SECTION 122VBR-1
ST. CLAIR COUNTY
ILLINOIS ROUTE 161 OVER METRO-LINK
STATION 69+96.56 S.N. 082-0091

SCALE: NONE DRAWN BY: GLD
DATE: 7/03/06 CHECKED BY: GBR

L:\CIVIL\06068\WorkOrder_5\DRAW\Sheets\REVISED DGN'S STAGING CHANGE\BEARING DETAILS 2.dgn
7/3/2006