F.A.P. RTE.	SECTION	COUNTY	TOTAL SHEETS	SHEET NO.
336	99-00232-00-WR	KANE	97	82
STA.		TO STA.		
FED. ROAD DIST. NO. 1	ILLINOIS	FED. AID PROJECT		

CONTRACT NO. 83738

TRAFFIC SIGNAL MAST ARM AND POST

MAST ARM MOUNTED SIGNAL IN PROPOSED & FUTURE SIDEWALK AREA. INTERSECTION SHOWN WITH PEDESTRIAN SIGNAL AND PUSHBUTTON DETECTOR

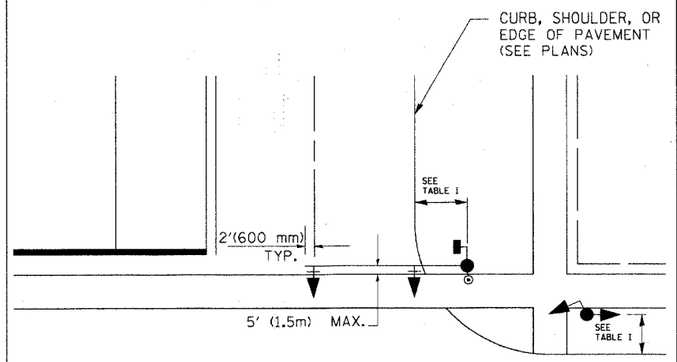

PEDESTRIAN SIGNAL PUSHBUTTON

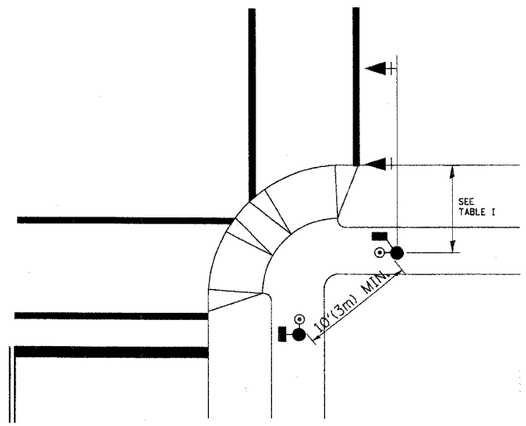

RECOMMENDED PUSHBUTTON LOCATIONS FOR ACCESSIBLE PEDESTRIAN SIGNALS SHALL BE IN ACCORDANCE WITH THE CURRENT MUTCD (SEE NOTE 1). TO MEET MUTCD REQUIREMENTS, PEDESTRIAN SIGNAL PUSHBUTTONS MAY HAVE TO BE MOUNTED ON A SEPARATE POST.

NOTES:

1. AT ACCESSIBLE PEDESTRIAN SIGNAL LOCATIONS WITH PEDESTRIAN ACTUATION. EACH PUSHBUTTON SHALL ACTIVATE BOTH THE WALK INTERVAL AND THE ACCESSIBLE PEDESTRIAN SIGNALS.

   AT ACCESSIBLE PEDESTRIAN SIGNAL LOCATIONS, PUSHBUTTONS SHOULD CLEARLY INDICATE WHICH CROSSWALK SIGNAL IS ACTUATED BY EACH PUSHBUTTON. PUSHBUTTONS AND TACTILE ARROWS SHOULD HAVE HIGH VISUAL CONTRAST (SEE THE DEPARTMENT OF JUSTICE'S AMERICANS WITH DISABILITIES ACT STANDARDS FOR ACCESSIBLE DESIGN, 1991). TACTILE ARROWS SHOULD POINT IN THE SAME DIRECTION AS THE ASSOCIATED CROSSWALK. AT CORNERS OF SIGNALIZED LOCATIONS WITH ACCESSIBLE PEDESTRIAN SIGNALS WHERE PEDESTRIAN PUSHBUTTONS ARE PROVIDED, THE PUSHBUTTONS SHOULD BE SEPARATED BY THE DISTANCE OF AT LEAST 10 FT (3m). THIS ENABLES PEDESTRIANS WHO HAVE VISUAL DISABILITIES TO DISTINGUISH AND LOCATE THE APPROPRIATE PUSHBUTTON.

   PUSHBUTTONS FOR ACCESSIBLE PEDESTRIAN SIGNALS SHOULD BE LOCATED AS FOLLOWS:

   A: ADJACENT TO A LEVEL ALL-WEATHER SURFACE TO PROVIDE ACCESS FROM A WHEELCHAIR, AND WHERE THERE IS AN ALL WEATHER SURFACE, WHEELCHAIR ACCESSIBLE ROUTE TO THE RAMP.

   B: WITHIN 5 FT (1.5m) OF THE CROSSWALK EXTENDED.

   C: WITHIN 10 FT (3m) OF THE EDGE OF CURB, SHOULDER, OR PAVEMENT.

   D: PARALLEL TO THE CROSSWALK TO BE USED (SEE MUTCD FIGURE 4E-2).

   E: NORMAL PEDESTRIAN PUSHBUTTON MOUNTING HEIGHT SHOULD BE 3.5 FT (1.05m) ABOVE ADJACENT SIDEWALK

2. PEDESTRIAN SIGNAL FACES SHALL BE MOUNTED WITH THE BOTTOM OF THE HOUSING NOT LESS THAN 8 FT (2.4m) NOR MORE THAN 10 FT (3.0m) ABOVE THE SIDEWALK LEVEL AND SO THERE IS A PEDESTRIAN INDICATION IN THE LINE OF PEDESTRIANS' VISION WHICH PERTAINS TO THE CROSSWALK BEING USED.

3. THE BOTTOM OF THE HOUSING OF A VEHICLE SIGNAL FACE, NOT MOUNTED OVER A ROADWAY, SHALL BE AT LEAST 10 FT (3.0m) BUT NOT MORE THAN 15 FT (4.5m) ABOVE THE SIDEWALK OR, ABOVE THE PAVEMENT GRADE AT THE CENTER OF THE HIGHWAY IF NO SIDEWALKS EXIST.

4. THE BOTTOM OF THE HOUSING OF A VEHICLE SIGNAL FACE, MOUNTED OVER A ROADWAY, SHALL BE ACCORDING TO CURRENT STATE STANDARDS 877001 AND 877006. (16 FT (5m) MIN., 18 FT (5.5m) MAX., FROM HIGHEST POINT OF PAVEMENT)

PEDESTRIAN SIGNAL POST

PEDESTRIAN SIGNAL HEAD AND PEDESTRIAN PUSHBUTTON DETECTOR LOCATION

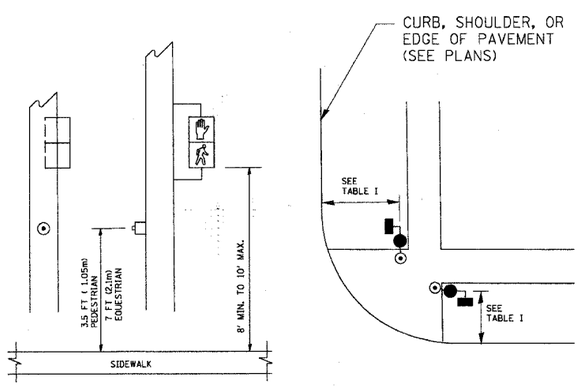

TABLE I

TRAFFIC SIGNAL EQUIPMENT	COMBINATION CONCRETE CURB AND GUTTER (MIN. DIST. FROM BACK OF CURB)	SHOULDER/NON-CURBED AREA (MIN. DIST. FROM EDGE OF PAVEMENT)
TRAFFIC SIGNAL MAST ARM POLE	6 FT (1.8m)	SHOULDER WIDTH + 2FT(0.6m), MINIMUM 10FT(3.0m)
TRAFFIC SIGNAL POST	4 FT (1.2m)	SHOULDER WIDTH + 2FT(0.6m), MINIMUM 10FT(3.0m)
PEDESTRIAN SIGNAL POST	4 FT (1.2m)	SHOULDER WIDTH + 2FT(0.6m), MINIMUM 10FT(3.0m)
PEDESTRIAN PUSHBUTTON	SEE NOTE 1	SEE NOTE 1

REVISIONS	
NAME	DATE
BUREAU OF TRAFFIC	1/01/02

ILLINOIS DEPARTMENT OF TRANSPORTATION

DISTRICT 1

STANDARD TRAFFIC SIGNAL DESIGN DETAILS

SCALE: VERT. HORIZ. NONE

DATE 10/18/2002

DRAWN BY: RWP
DESIGNED BY: DAD
CHECKED BY: DAZ
SHEET 2 OF 4

TS05

REVISION DATE: 01/01/02

10/18/2002
c:\projects\dist\std\ts05.dgn
V1-TS05