STATE OF ILLINOIS
DEPARTMENT OF TRANSPORTATION

| ROUTE NO. | SECTION | COUNTY | TOTAL SHEETS | SHEET NO. |
|---|---|---|---|---|
| FAU 1441 | 00-00059-00-BR | KANE | 154 | 114 |
| FED. ROAD DIST. NO. 7 | | ILLINOIS | FED. AID PROJECT- | |

SHEET NO. S43 OF S52 SHEETS

Contract # 83869

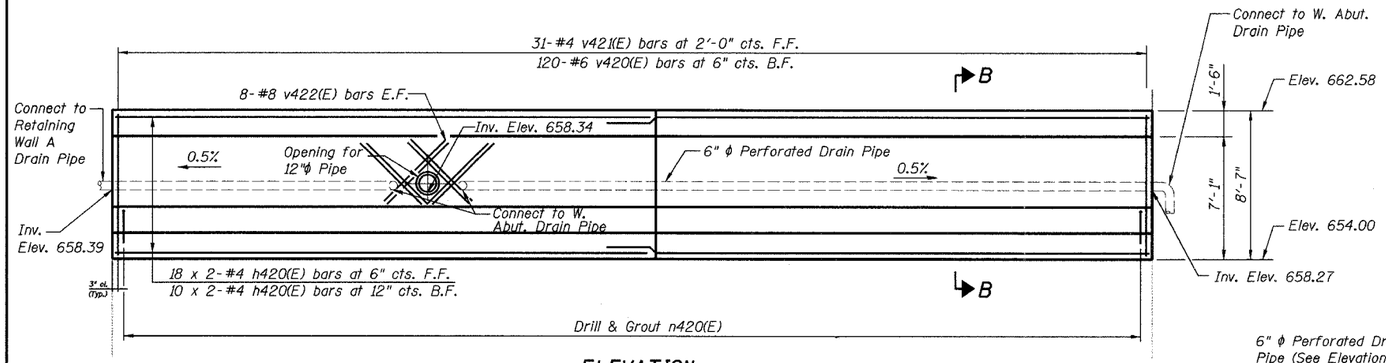


## ELEVATION
(Looking West)

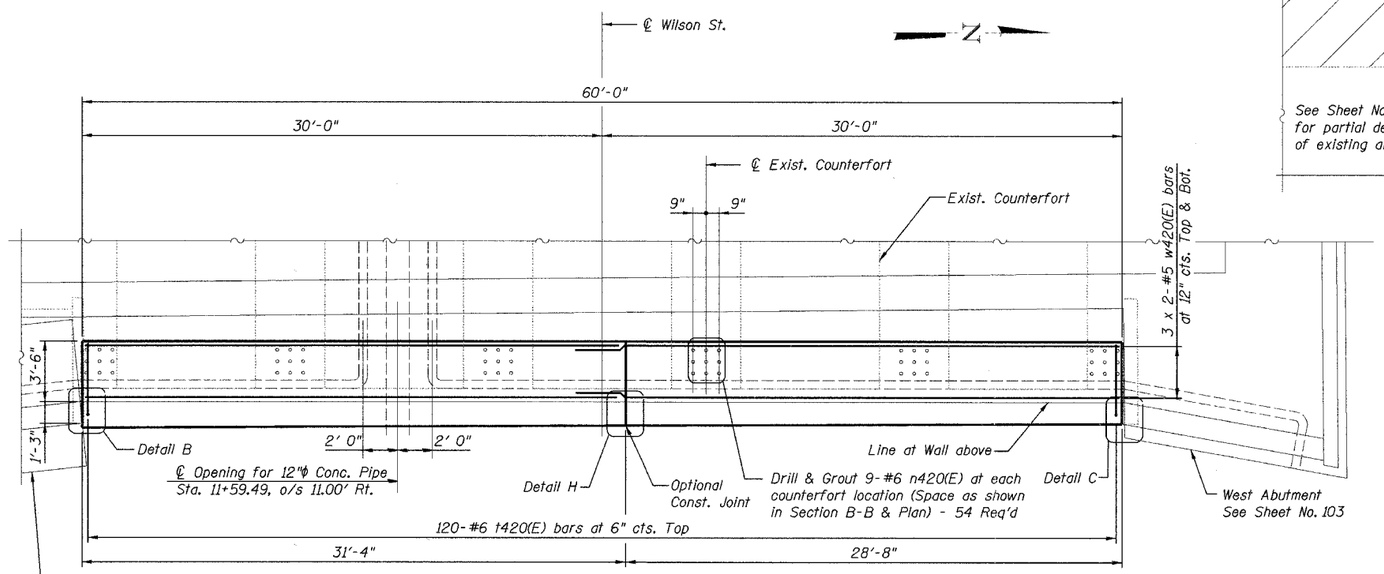


## PLAN

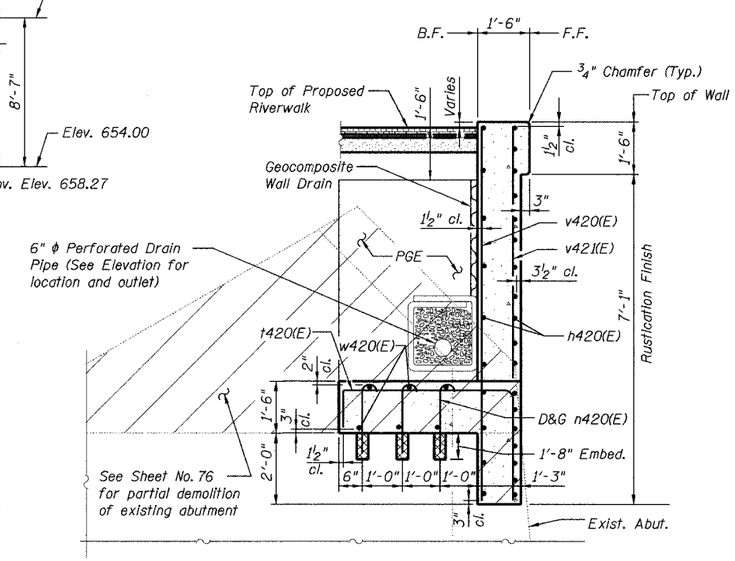


## SECTION B-B

## BILL OF MATERIAL

| Bar | No. | Size | Length | Shape |
|---|---|---|---|---|
| h420(E) | 56 | #4 | 30'-7" | |
| t420(E) | 120 | #6 | 7'-4" | |
| v420(E) | 120 | #6 | 8'-2" | |
| v421(E) | 31 | #4 | 4'-10" | |
| v422(E) | 16 | #8 | 5-4" | |
| w420(E) | 12 | #5 | 30'-10" | |
| Concrete Structures | | | Cu. Yd. | 36.4 |
| Reinforcement Bars, Epoxy Coated | | | Pound | 4660 |
| Porous Granular Embankment | | | Cu. Yd. | 32 |
| Pipe Underdrains for Structures 6" | | | Foot | 65 |
| Type I Rustication Finish (Special) | | | Sq. Ft. | 425 |
| Geocomposite Wall Drain | | | Sq. Yd. | 16 |
| Drill and Grout Dowel Bars | | | Each | 54 |

## DOWEL SCHEDULE

| Bar | No. | Size | Length | Shape |
|---|---|---|---|---|
| n420(E) | 54 | #6 | 3'-8" | |

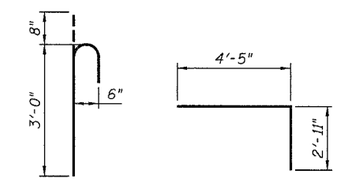


D&G BAR n420(E) BAR t420(E)

## NOTES

1. Reinforcement bars designated (E) shall be epoxy coated.
2. F.F. denotes Front Face
   B.F. denotes Back Face
   E.F. denotes Each Face
3. Cut h420(E), v420(E), and v421(E) bars to fit circular opening for 12" ϕ pipe.
4. For Detail B see Sheet No. 113
5. For Detail H see Sheet No. 118
6. Bedrock elevations are based on available soil boring data and are approximate. It shall be the contractor's responsibility to verify the actual bedrock elevations in the field and make necessary approved adjustments prior to construction or ordering of materials. Such variations shall not be cause for additional compensation for a change in scope of work, however, the contractor will be paid for the quantity actually furnished at the unit price for the work.
7. See Arch. Plans for Detail of Rustication Finish, Type 1.
8. See Specifications for information regarding protection of existing buildings and structures.

| Typ. Lap Splice | |
|---|---|
| Bar Size | Min. Lap |
| #4 | 1'-8" |
| #5 | 2'-2" |
| #5* | 3'-0"* |
| #6 | 2'-7" |
| #7 | 3'-5" |
| #8 | 4'-6" |

* Top Horizontal Bar

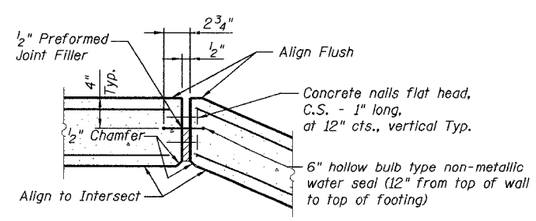


## DETAIL C

| | |
|---|---|
| DESIGNED - | DWH |
| CHECKED - | BJN |
| DRAWN - | BJN/EF |
| CHECKED - | JSD |

LOCHNER
H.W. LOCHNER, INC., CHICAGO, ILLINOIS

RETAINING WALL B
WILSON ST OVER FOX RIVER
SECTION 00-00059-00-BR
KANE COUNTY
STRUCTURE NO. 045-6051