F.A.U. RTE.	SECTION	COUNTY	TOTAL SHEETS	SHEET NO
1545	00-00115-00-BR	DUPAGE	97	74
STA. 1+31.77		TO STA. 5+50.00		
FED. ROAD DIST. NO.	ILLINOIS	FED. AID PROJECT		

CONTRACT 83961

INSERT LAYOUT (66 PLACES)
(+) = INSERT SYMBOL

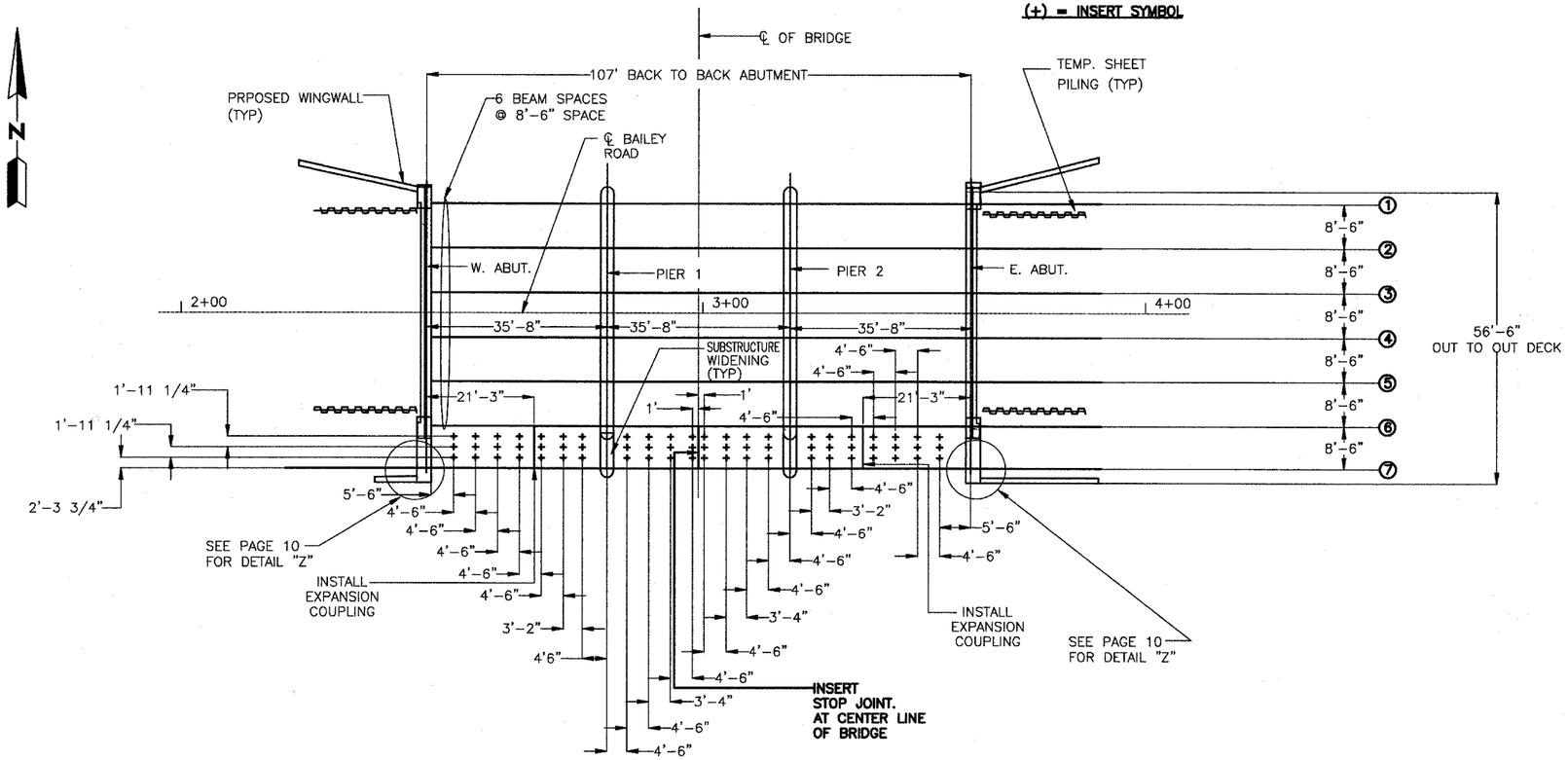

PLAN
(STAGE I SUBSTRUCTURE CONSTRUCTION)
NTS

NOTE: SEE PAGE 9 FOR SECTION A-A AND B-B.

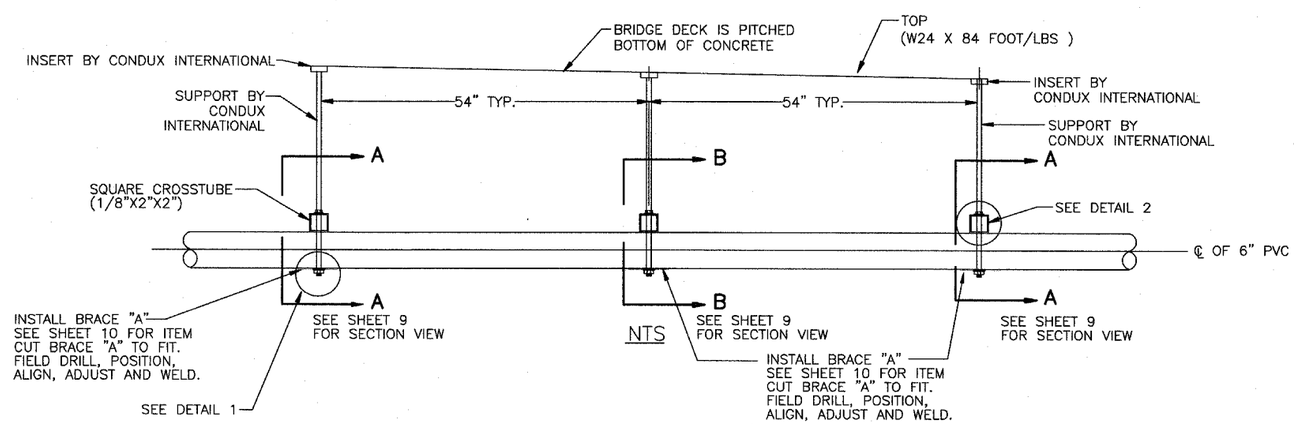

NTS

NOTES:

1) ALL 3/4 CONCRETE INSERTS WITH SWIVEL NUTS SHALL BE INSTALLED ON THE INSIDE SUPPORT ROD HANGER.

2) BRACE ITEM K (PAGE-7) SHALL BE INSTALLED AT 4'-6" SPACING. ON THE OUTSIDE AT BOTH BRIDGE ABUTMENTS.

3) ALL INSERTS SHALL BE CHECKED BY VISUAL OBSERVATION AND HAND CHECKED TO BE SURE THAT THE INSERTS WILL NOT MOVE OR FALL OFF DURING THE CONCRETE POUR PROCESS.

4) CONTRACTOR SHALL ALLOW FOR DELAY DUE TO CONCRETE CURING WHICH CAN TAKE UP TO 6 WEEKS OR MORE.

5) CONTRACTOR TO PROVIDE FALL PROTECTION.

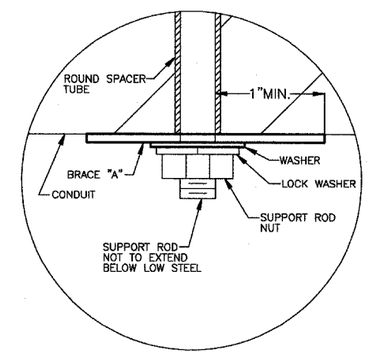

DETAIL 1

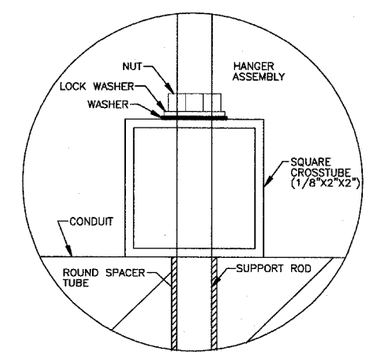

DETAIL 2

CITY OF NAPERVILLE/DEPARTMENT OF PUBLIC UTILITIES – ELECTRIC

CALL J.U.L.I.E. 48 HRS. PRIOR TO CONSTRUCTION

PROJECT TITLE: BAILEY RD. BRIDGE DUCTBANK INSTALLATION		MAP NO.: 2054/1323	CAD FILE: .DWG 0058199001C8.DWG
PROJECT DESCRIPTION: COORDINATED WITH BRIDGE IMPROVEMENT		DRAWN BY: JK	PROJECT NO.: EU12-06-04
DATE: 05-15 07	WORK REQUEST NO. 58199	CHKD:	SEC:
ISSUED		APPR:	COMPLETED BY:
ENGINEER: RPS		SCALE: NTS	SHEET 8 OF 23
REVISION: 1 2 3			