11-17-06 Letting, Item 047

F.A.U. RTE.	SECTION	COUNTY	TOTAL SHEETS	SHEET NO.
6145	01-00590-00-BR	LaSALLE	168	1

CONTRACT NO. 87293

STATE OF ILLINOIS
DEPARTMENT OF TRANSPORTATION
DIVISION OF HIGHWAYS

PLANS FOR PROPOSED FEDERAL AID HIGHWAY MAJOR BRIDGE CONSTRUCTION

F.A.U. ROUTE 6145 (BROADWAY STREET)
SECTION 01-00590-00-BR (LaSALLE COUNTY)
SECTION 01-00076-00-BR (CITY OF STREATOR)
PROJECT BRM-5066(12)
LaSALLE COUNTY

C-93-054-04

FOR INDEX OF SHEETS, SEE SHEET NO. 2

LOCATION OF SECTION INDICATED THUS: –

DESIGN DESIGNATION – 4485 ADT (06) MAJOR COLLECTOR 1.60 (P.C.C. –20)

ELECTRIC

COMMONWEALTH EDISON
1910 BRIGGS ST.
JOLIET, IL. 60433

GAS

NICOR GAS
90 NORTH FINDLEY
GLEN ELLYN, IL. 60137

TELEPHONE

VERIZON NORTH
120 NORTH STERLING ST.
STREATOR, IL. 61364

WATER

ILLINOIS AMERICAN WATER CO.
120 SOUTH STERLING ST.
STREATOR, IL. 61364

SEWER

CITY OF STREATOR
204 SOUTH BLOOMINGTON ST.
STREATOR, IL. 61364

TECHNICAL OPERATIONS MANAGER
2506½ NORTH BLOOMINGTON ST.
STREATOR, IL. 61364

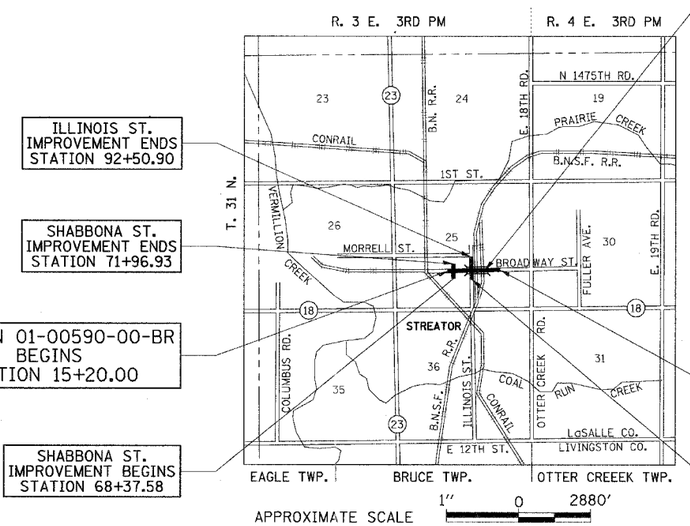

N

NET LENGTH OF PROJECT = 1380.00 LIN. FT. = 0.261 MILES

PROPOSED IMPROVEMENT

REMOVAL AND REPLACEMENT OF THE EXISTING BRIDGE AND APPROACH ROADWAY CARRYING F.A.U. RTE. 6145 (BROADWAY ST.) OVER BNSF RAILROAD AND ILLINOIS ST. AT STATION 21+75.75. THE NEW BRIDGE CONSISTS OF A THREE-SPAN COMPOSITE, CONTINOUS WELDED STEEL PLATE GIRDER SUPERSTRUCTURE SUPPORTED ON PILE BENT ABUTMENTS AND CONCRETE HAMMERHEAD PIERS. EXISTING STRUCTURE NUMBER 050-8016 TO BE REMOVED. PROPOSED STRUCTURE NUMBER 050-8023. THE APPROACH ROADWAY TO BE RECONSTRUCTED USING MECHANICALLY STABILIZED EARTH (MSE) RETAINING WALLS.

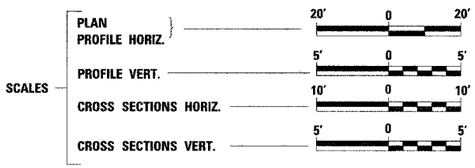

FULL SIZE PLANS HAVE BEEN PREPARED USING STANDARD ENGINEERING SCALES. REDUCED SIZED PLANS WILL NOT CONFORM TO STANDARD SCALES. IN MAKING MEASUREMENTS ON REDUCED PLANS, THE ABOVE SCALES MAY BE USED.

J.U.L.I.E.
JOINT UTILITY LOCATION INFORMATION FOR EXCAVATION
1-800-892-0123

STATE OF ILLINOIS
DEPARTMENT OF TRANSPORTATION
DIVISION OF HIGHWAYS

SUBMITTED May 16 20 06
Laurence A Kenji
COUNTY ENGINEER

May 15 20 06
Ray L Smith
MAYOR OF STREATOR

May 16 20 06
Kenneth R Ley
DISTRICT ENGINEER LOCAL ROADS & STREETS

May 16 20 06
APPROVAL Gregory Murphy
DEPUTY DIRECTOR REGION 2 ENGINEER

PRINTED BY THE AUTHORITY OF THE STATE OF ILLINOIS

Hutchison Engineering, Inc.
Jacksonville - Since 1945 - Joliet
2006 JOB# 2190

LYLE R. CONRAD
93216
REGISTERED PROFESSIONAL ENGINEER
OF ILLINOIS
EXPIRES 11/30/07
ENGINEERS SEAL

CONTRACT NO. 87293

2190C001

F.A.U. RTE.	SECTION	COUNTY	TOTAL SHEETS	SHEET NO.
6145	01-00590-00-BR	LaSALLE	168	2
STA. N/A		TO STA. N/A		
FED. ROAD DIST. NO. 3	ILLINOIS	FEDERAL AID PROJECT		

CONTRACT NO. 87293

GENERAL NOTES

EXCEPT AS NOTED ON THE PLANS, PAVEMENT GRADES SHOWN ARE AT THE TOP OF PAVEMENT SURFACES.

FOR STABILIZATION, ALL TYPE III BARRICADES SHALL REQUIRE A MINIMUM OF FOUR SAND BAGS PER BARRICADE.

WHERE SECTION OR SUBSECTION MONUMENTS ARE ENCOUNTERED, THE ENGINEER SHALL BE NOTIFIED BEFORE SUCH MONUMENTS ARE REMOVED. THE CONTRACTOR SHALL PROTECT AND CAREFULLY PRESERVE ALL MONUMENTS UNTIL AN AUTHORIZED SURVEYOR OR AGENT HAS WITNESSED OR OTHERWISE REFERENCED THEIR LOCATION. THE CONTRACTOR SHALL BE RESPONSIBLE FOR HAVING AN AUTHORIZED SURVEYOR REESTABLISH ANY SECTION OR SUBSECTION MONUMENTS DESTROYED BY HIS OPERATIONS.

SEEDING SHALL NOT BE PERMITTED AT ANY TIME WHEN THE GROUND IS FROZEN, WET, OR IN AN UNTILLABLE CONDITION. LOCATIONS TO BE SEEDED WILL BE DETERMINED BY THE ENGINEER.

ONLY THOSE TREES DESIGNATED BY THE ENGINEER OR LISTED IN THE TREE REMOVAL SCHEDULE SHALL BE REMOVED. THE CONTRACTOR SHALL PROTECT ALL REMAINING TREES FROM DAMAGE DUE TO HIS OPERATIONS.

FOR NEW CONSTRUCTION, PLACE SIDEWALK RAMPS FOR THE HANDICAPPED (STANDARD 424001) AT ALL LOCATIONS WHERE PROPOSED SIDEWALK ABUTS CURB AT STREET ENTRANCES.

ALL ELEVATIONS REFERRING TO U.S.G.S. MEAN SEA LEVEL DATUM.

ABANDONED UNDERGROUND UTILITIES THAT CONFLICT WITH CONSTRUCTION SHALL BE DISPOSED OF OUTSIDE THE LIMITS OF RIGHT-OF-WAY ACCORDING TO ARTICLE 202.03 OF THE STANDARD SPECIFICATIONS AND AS DIRECTED BY THE ENGINEER. THIS WORK WILL NOT BE PAID FOR SEPARATELY BUT SHALL BE INCLUDED IN THE COST OF EARTH EXCAVATION.

ANY REFERENCE TO A STANDARD IN THESE PLANS SHALL BE INTERPRETED TO MEAN THE EDITION AS INDICATED BY THE SUB-NUMBER LISTED ON THE INDEX OF SHEETS OR THE COPY OF THE STANDARD INCLUDED IN THESE PLANS.

THE COST OF MAKING ANY SEWER CONNECTIONS TO AN EXISTING DRAINAGE STRUCTURE OR PIPE SHALL BE INCLUDED IN THE COST OF THE NEW SEWER.

THE FOLLOWING RATES OF APPLICATION HAVE BEEN USED IN CALCULATING PLAN QUANTITIES:

GRANULAR MATERIALS----------2.05 TONS/CU YD
BITUMINOUS MATERIALS PRIME COAT----------0.08 GAL/SQ YD
NITROGEN FERTILIZER NUTRIENT----------60 LBS/ACRE (SODDING)
PHOSPHORUS FERTILIZER NUTRIENT----------60 LBS/ACRE (SODDING)
POTASSIUM FERTILIZER NUTRIENT----------60 LBS/ACRE (SODDING)
SHORT TERM PAVEMENT MARKING----------10 FT/100 FT OF FINAL APPLICATION
SUPPLEMENTAL WATERING----------3 GAL/SQ YD/APPLICATION
CA-7 BEDDING STONE----------1.32 TONS/CU YD

LIST OF STANDARDS

000001-04	STANDARD SYMBOLS, ABBREVIATIONS AND PATTERNS
280001-02	TEMPORARY EROSION CONTROL SYSTEMS
420001-06	PAVEMENT JOINTS
420101-03	7.2 m (24') JOINTED PCC PAVEMENT
420111-01	PCC PAVEMENT ROUNDOUTS
420401-05	BRIDGE APPROACH PAVEMENT
424001-04	CURB RAMPS FOR SIDEWALKS
503001-02	CONCRETE PARAPET SLIP-FORMING OPTION
515001-02	NAME PLATE FOR BRIDGES
602101-01	DRAINAGE STRUCTURES, TYPES 1, 2 & 3
602301-01	INLET, TYPE A
602306-01	INLET, TYPE B
602401-01	MANHOLE, TYPE A
602406-02	MANHOLE, TYPE A, 1800 mm (72") DIAMETER
602601	PRECAST REINFORCED CONCRETE FLAT SLAB TOP
602701-01	CAST IRON STEPS
604001-02	FRAME AND LIDS, TYPE 1
604006-02	FRAME AND GRATE, TYPE 3
604046-01	FRAME AND GRATE, TYPE 10
604051-02	FRAME AND GRATE, TYPE 11
604071-02	FRAME AND GRATE, TYPE 20
606001-02	CONCRETE CURB AND COMBINATION CONCRETE CURB AND GUTTER
606201	TYPE B GUTTER (INLET, OUTLET, AND ENTRANCE)
606301-02	PC CONCRETE ISLAND AND MEDIANS
701301-02	LANE CLOSURE 2L, 2W SHORT TIME OPERATIONS
701311-02	LANE CLOSURE 2L, 2W MOVING OPERATIONS - DAY ONLY
701501-03	URBAN LANE CLOSURE 2L, 2W UNDIVIDED
701801-03	LANE CLOSURE MULTILANE 1W OR 2W CROSSWALK OR SIDEWALK CLOSURE
702001-06	TRAFFIC CONTROL DEVICES
781001-02	TYPICAL APPLICATIONS RAISED REFLECTIVE PAVEMENT MARKERS
BLR 10-5	PCC PAVEMENT SPECIAL DETAILS
BLR 14-9	PCC PAVEMENT (NON-REINFORCED)
BLR 17-3	TRAFFIC CONTROL DEVICES - DAY LABOR CONSTRUCTION

INDEX OF SHEETS

1	COVER SHEET
2	INDEX OF SHEETS, LIST OF STANDARDS, GENERAL NOTES AND LEGEND
3-4	SUMMARY OF QUANTITIES
5-12	TYPICAL SECTIONS
13-19	SCHEDULES OF QUANTITIES
20-21	TIE POINTS
22-32	STAGE CONSTRUCTION PLANS
33-40	PLAN & PROFILE SHEETS
41-46	DRAINAGE AND UTILITIES PLANS
47-51	DRAINAGE PROFILE SHEETS
52-55	RIGHT OF WAY PLATS
56	INTERSECTION DETAILS
57-59	PAVEMENT REMOVAL PLANS
60-62	PAVEMENT MARKING PLANS
63-65	EROSION CONTROL PLANS
66-68	P.C.C. PAVEMENT JOINT DETAILS
69-70	ENTRANCE AND SPECIAL DETAILS
71-76	LIGHTING PLANS
77-80	EXISTING BRIDGE PLANS AND DETAILS
81-144	PROPOSED BRIDGE PLANS AND DETAILS
145-168	CROSS SECTIONS

LEGEND

- EXISTING BUSH
- EXISTING TREE (TO BE REMOVED)
- SS — EXISTING STORM SEWER MANHOLE
- SANS — EXISTING SANITARY SEWER MANHOLE
- (TB 6) — TRENCH BACKFILL - CU YD
- EXISTING PAVEMENT REMOVAL
- EXISTING P.C.C. SIDEWALK REMOVAL
- PROPOSED P.C.C. SIDEWALK
- PROPOSED P.C.C. ENTRANCE PAVEMENT
- PROPOSED P.C.C. SIDEWALK RAMPS ACCESSIBLE TO THE DISABLED
- (MILLING & RESURFACING)
  EXISTING BITUMINOUS SURFACE REMOVAL, 2"
  PROPOSED BITUMINOUS CONCRETE SURFACE COURSE, 2"
- (II 10) — PROPOSED PAVEMENT PATCHING - TYPE & SQ YD

F.A.U. RTE.	SECTION	COUNTY	TOTAL SHEETS	SHEET NO.
6145	01-00590-00-BR	LaSALLE	168	3
STA. N/A	TO STA. N/A			
FED. ROAD DIST. NO. 3	ILLINOIS	FEDERAL AID PROJECT		

CONTRACT NO. 87293

SUMMARY OF QUANTITIES

SPECIALTY ITEM &/OR SPECIAL PROVISION	CODE NO.	DESCRIPTION	UNIT	TOTAL QUANTITY	CONSTRUCTION CODE		
					X571-2A	Y030-1E	Y080
	20100210	TREE REMOVAL (OVER 15 UNITS DIAMETER)	UNIT	39	39	0	0
	20200100	EARTH EXCAVATION	CU YD	810	810	0	0
*	20201200	REMOVAL AND DISPOSAL OF UNSUITABLE MATERIAL	CU YD	1389	1389	0	0
	20400800	FURNISHED EXCAVATION	CU YD	355	355	0	0
Δ	20800150	TRENCH BACKFILL	CU YD	910	910	0	0
Δ	21101625	TOPSOIL FURNISH AND PLACE, 6"	SQ YD	3669	3669	0	0
Δ	25000400	NITROGEN FERTILIZER NUTRIENT	POUND	48	48	0	0
Δ	25000500	PHOSPHOROUS FERTILIZER NUTRIENT	POUND	48	48	0	0
Δ	25000600	POTASSIUM FERTILIZER NUTRIENT	POUND	48	48	0	0
Δ	25200100	SODDING	SQ YD	3669	3669	0	0
Δ	25200200	SUPPLEMENTAL WATERING	UNIT	11	11	0	0
	28000250	TEMPORARY EROSION CONTROL SEEDING	POUND	1213	1213	0	0
	28000400	PERIMETER EROSION BARRIER	FOOT	1161	1161	0	0
	28000500	INLET AND PIPE PROTECTION	EACH	5	5	0	0
Δ	31100100	SUB-BASE GRANULAR MATERIAL, TYPE A	TON	2670	2670	0	0
	31200100	STABILIZED SUB-BASE, 4"	SQ YD	578	578	0	0
Δ	40200800	AGGREGATE SURFACE COURSE, TYPE B	TON	372	372	0	0
Δ	40600100	BITUMINOUS MATERIALS (PRIME COAT)	GALLON	43	43	0	0
Δ	40600300	AGGREGATE (PRIME COAT)	TON	1	1	0	0
	40600990	TEMPORARY RAMP	SQ YD	259	259	0	0
Δ	42000301	PORTLAND CEMENT CONCRETE PAVEMENT, 8" (JOINTED)	SQ YD	5432	5432	0	0
	42000541	PORTLAND CEMENT CONCRETE PAVEMENT, 12" (JOINTED)	SQ YD	1248	1248	0	0
Δ	42001300	PROTECTIVE COAT	SQ YD	8197	8197	0	0
*	42001400	BRIDGE APPROACH PAVEMENT (SPECIAL)	SQ YD	173	173	0	0
	42100340	CONTINUOUSLY REINFORCED PORTLAND CEMENT CONCRETE PAVEMENT, 12"	SQ YD	578	578	0	0
	42100940	PAVEMENT REINFORCEMENT, 12"	SQ YD	578	578	0	0
Δ	42300200	PORTLAND CEMENT CONCRETE DRIVEWAY PAVEMENT, 6"	SQ YD	364	364	0	0
Δ	42300400	PORTLAND CEMENT CONCRETE DRIVEWAY PAVEMENT, 8"	SQ YD	179	179	0	0
Δ	42400100	PORTLAND CEMENT CONCRETE SIDEWALK, 4"	SQ FT	4519	4519	0	0
Δ	42400800	DETECTABLE WARNINGS	SQ FT	114	114	0	0
Δ	44000007	BITUMINOUS SURFACE REMOVAL, 2"	SQ YD	539	539	0	0
Δ	44000100	PAVEMENT REMOVAL	SQ YD	6000	6000	0	0
Δ	44000500	COMBINATION CURB AND GUTTER REMOVAL	FOOT	1704	1704	0	0
* Δ	44000600	SIDEWALK REMOVAL	SQ FT	7956	7956	0	0
Δ	44200094	PAVEMENT PATCHING, TYPE II, 8"	SQ YD	38	38	0	0
Δ	44200099	PAVEMENT PATCHING, TYPE III, 8"	SQ YD	39	39	0	0
Δ	44200101	PAVEMENT PATCHING, TYPE IV, 8"	SQ YD	157	157	0	0
Δ	44213200	SAW CUTS	FOOT	199	199	0	0
	48101500	AGGREGATE SHOULDERS, TYPE B, 6"	SQ YD	65	65	0	0
	50100200	REMOVAL OF EXISTING STRUCTURES	L SUM	1	1	0	0
	50200100	STRUCTURE EXCAVATION	CU YD	2406	2406	0	0
	50300160	NEOPRENE EXPANSION JOINT, 4"	FOOT	39	39	0	0
	50300225	CONCRETE STRUCTURES	CU YD	791.9	791.9	0	0
	50300255	CONCRETE SUPERSTRUCTURE	CU YD	866.9	866.9	0	0
	50300260	BRIDGE DECK GROOVING	SQ YD	1188	1188	0	0
	50300300	PROTECTIVE COAT	SQ YD	3874	3874	0	0
	50300310	ELASTOMERIC BEARING ASSEMBLY, TYPE I	EACH	6	6	0	0
	50300320	ELASTOMERIC BEARING ASSEMBLY, TYPE II	EACH	6	6	0	0
	50500105	FURNISHING AND ERECTING STRUCTURAL STEEL	L SUM	1	1	0	0
	50500505	STUD SHEAR CONNECTORS	EACH	4590	4590	0	0
	50800205	REINFORCEMENT BARS, EPOXY COATED	POUND	273450	273450	0	0
	51201600	FURNISHING STEEL PILES HP12X53	FOOT	2368	2368	0	0
	51202700	DRIVING STEEL PILES	FOOT	2368	2368	0	0
	51203600	TEST PILE STEEL HP12X53	EACH	4	4	0	0
	51500100	NAME PLATES	EACH	1	1	0	0
* Δ	550A2320	STORM SEWERS, RUBBER GASKET, CLASS A, TYPE 1, 12"	FOOT	228	228	0	0
* Δ	550A2420	STORM SEWERS, RUBBER GASKET, CLASS A, TYPE 1, 48"	FOOT	340	340	0	0
* Δ	550A2520	STORM SEWERS, RUBBER GASKET, CLASS A, TYPE 2, 12"	FOOT	1500	1500	0	0
* Δ	550A2540	STORM SEWERS, RUBBER GASKET, CLASS A, TYPE 2, 18"	FOOT	98	98	0	0
* Δ	550A2560	STORM SEWERS, RUBBER GASKET, CLASS A, TYPE 2, 24"	FOOT	140	140	0	0
	58700200	BRIDGE SEAT SEALER	SQ FT	535	535	0	0
	60100080	FRENCH DRAINS	CU YD	51	51	0	0
	60100915	PIPE DRAINS 6"	FOOT	85	85	0	0
Δ	60218400	MANHOLES, TYPE A, 4'-DIAMETER, TYPE 1 FRAME, CLOSED LID	EACH	18	18	0	0
Δ	60219200	MANHOLES, TYPE A, 4'-DIAMETER, TYPE 10 FRAME AND GRATE	EACH	3	3	0	0
Δ	60219300	MANHOLES, TYPE A, 4'-DIAMETER, TYPE 11 FRAME AND GRATE	EACH	1	1	0	0
Δ	60221100	MANHOLES, TYPE A, 5'-DIAMETER, TYPE 1 FRAME, CLOSED LID	EACH	3	3	0	0
Δ	60223800	MANHOLES, TYPE A, 6'-DIAMETER, TYPE 1 FRAME, CLOSED LID	EACH	1	1	0	0

Δ = SPECIALTY ITEM / * = SPECIAL PROVISION

SUMMARY OF QUANTITIES (SHEET 1 OF 2)

F.A.U. RTE.	SECTION	COUNTY	TOTAL SHEETS	SHEET NO.
6145	01-00590-00-BR	LaSALLE	168	4
STA. N/A	TO STA. N/A			
FED. ROAD DIST. NO. 3	ILLINOIS	FEDERAL AID PROJECT		

CONTRACT NO. 87293

SPECIALTY ITEM &/OR SPECIAL PROVISION	CODE NO.	DESCRIPTION	UNIT	TOTAL QUANTITY	CONSTRUCTION CODE		
					X571-2A	Y030-1E	Y080
Δ	60228120	MANHOLES, SANITARY, 5'-DIAMETER, TYPE 1 FRAME, CLOSED LID	EACH	3	3	0	0
Δ	60234200	INLETS, TYPE A, TYPE 1 FRAME, OPEN LID	EACH	2	2	0	0
Δ	60235700	INLETS, TYPE A, TYPE 3 FRAME AND GRATE	EACH	2	2	0	0
Δ	60236700	INLETS, TYPE A, TYPE 10 FRAME AND GRATE	EACH	5	5	0	0
Δ	60236800	INLETS, TYPE A, TYPE 11 FRAME AND GRATE	EACH	16	16	0	0
Δ	60240210	INLETS, TYPE B, TYPE 1 FRAME, OPEN LID	EACH	1	1	0	0
Δ	60240215	INLETS, TYPE B, TYPE 1 FRAME, CLOSED LID	EACH	4	4	0	0
Δ	60240220	INLETS, TYPE B, TYPE 3 FRAME AND GRATE	EACH	2	2	0	0
Δ	60240305	INLETS, TYPE B, TYPE 10 FRAME AND GRATE	EACH	1	1	0	0
Δ	60240310	INLETS, TYPE B, TYPE 11 FRAME AND GRATE	EACH	9	9	0	0
Δ	60247130	DRAINAGE STRUCTURES, TYPE 1 WITH ONE TYPE 20 FRAME AND GRATE	EACH	4	4	0	0
Δ	60247160	DRAINAGE STRUCTURES, TYPE 1 WITH TWO TYPE 20 FRAMES AND GRATES	EACH	4	4	0	0
Δ	60260050	SANITARY MANHOLES TO BE RECONSTRUCTED	EACH	4	4	0	0
Δ	60260100	INLETS TO BE ADJUSTED	EACH	1	1	0	0
Δ	60500040	REMOVING MANHOLES	EACH	1	1	0	0
Δ	60500060	REMOVING INLETS	EACH	7	7	0	0
Δ	60602800	CONCRETE GUTTER, TYPE B	FOOT	445	445	0	0
Δ	60603800	COMBINATION CONCRETE CURB AND GUTTER, TYPE B-6.12	FOOT	2414	2414	0	0
Δ	60605000	COMBINATION CONCRETE CURB AND GUTTER, TYPE B-6.24	FOOT	412	412	0	0
Δ	60618320	CONCRETE MEDIAN SURFACE, 6"	SQ FT	2034	2034	0	0
	67000400	ENGINEER'S FIELD OFFICE, TYPE A	CAL MO	24	24	0	0
	67100100	MOBILIZATION	L SUM	1	1	0	0
•	70101700	TRAFFIC CONTROL AND PROTECTION	L SUM	1	1	0	0
	70103815	TRAFFIC CONTROL SURVEILLANCE	CAL DAY	40	40	0	0
	70300100	SHORT TERM PAVEMENT MARKING	FOOT	564	564	0	0
	70300220	TEMPORARY PAVEMENT MARKING - LINE 4"	FOOT	2365	2365	0	0
	70300240	TEMPORARY PAVEMENT MARKING - LINE 6"	FOOT	777	777	0	0
	70300280	TEMPORARY PAVEMENT MARKING - LINE 24"	FOOT	97	97	0	0
	70301000	WORK ZONE PAVEMENT MARKING REMOVAL	SQ FT	1488	1488	0	0
Δ	78005110	EPOXY PAVEMENT MARKING - LINE 4"	FOOT	2659	2659	0	0
Δ	78005130	EPOXY PAVEMENT MARKING - LINE 6"	FOOT	777	777	0	0
Δ	78005180	EPOXY PAVEMENT MARKING - LINE 24"	FOOT	97	97	0	0

SPECIALTY ITEM &/OR SPECIAL PROVISION	CODE NO.	DESCRIPTION	UNIT	TOTAL QUANTITY	CONSTRUCTION CODE		
					X571-2A	Y030-1E	Y080
Δ	80400100	ELECTRIC SERVICE INSTALLATION	EACH	1	0	1	0
Δ	81012600	CONDUIT IN TRENCH, 2" DIA. PVC	FOOT	90	0	90	0
	81200230	CONDUIT EMBEDDED IN STRUCTURE, 2" DIA. PVC	FOOT	1100	0	1100	0
Δ	81301200	JUNCTION BOX, STAINLESS STEEL, EMBEDDED IN STRUCTURE 12"X10"X6"	EACH	2	0	2	0
Δ	81702120	ELECTRIC CABLE IN CONDUIT, 600V (XLP TYPE USE) 1/C NO. 8	FOOT	610	0	610	0
Δ	81702130	ELECTRIC CABLE IN CONDUIT, 600V (XLP TYPE USE) 1/C NO. 6	FOOT	2650	0	2650	0
Δ	81702140	ELECTRIC CABLE IN CONDUIT, 600V (XLP TYPE USE) 1/C NO. 4	FOOT	3925	0	3925	0
Δ	82104500	LUMINAIRE, SODIUM VAPOR, RECTILINEAR TYPE, 250 WATT	EACH	9	0	9	0
Δ	X0321072	BRIDGE FENCE RAILING	FOOT	380	0	380	0
Δ	X0321598	MANHOLES, TYPE A, 6'-DIAMETER, WITH 2 TYPE 1 FRAME, CLOSED LID, RESTRICTOR PLATE	EACH	1	1	0	0
	X0323558	BRIDGE JOINT SYSTEM (EXPANSION), 1-5/8"	FOOT	39	39	0	0
	X4066414	BITUMINOUS CONCRETE SURFACE COURSE, SUPERPAVE, MIX "C", N=50	TON	61	61	0	0
	X5000350	FLOATING BEARINGS, FIXED 350K	EACH	6	6	0	0
	X5005350	FLOATING BEARINGS GUIDE EXPANSION 350K	EACH	6	6	0	0
• Δ	X5510100	STORM SEWER REMOVAL	FOOT	243	243	0	0
Δ	XX002082	SANITARY SEWER REMOVAL 24"	FOOT	127	127	0	0
	XX004056	MECHANICALLY STABILIZED EARTH RETAINING WALL	SQ FT	24680	24680	0	0
• Δ	XX005084	LIGHTING CONTROLLER FOUNDATION	EACH	1	0	1	0
• Δ	XX005810	LIGHTING CONTROLLER, TYPE CB-RCS, 200A - 240 DUAL	EACH	1	0	1	0
	Z0002600	BAR SPLICERS	EACH	908	908	0	0
	Z0013798	CONSTRUCTION LAYOUT	L SUM	1	1	0	0
•	Z0022800	FENCE REMOVAL	FOOT	58	58	0	0
	Z0036600	PARAPET RAILING	FOOT	1747	1747	0	0
	Z0048665	RAILROAD PROTECTIVE LIABILITY INSURANCE	L SUM	1	1	0	0
Δ	Z0060200	SANITARY SEWER, TYPE 2 24"	FOOT	140	140	0	0
	Z0076600	TRAINEES	HOUR	1000	0	0	1000
Δ	XX006617	LIGHT POLE, ALUMINUM, 30 FT. MH, 1.5 FT. MAST ARM	EACH	9	0	9	0
	XX006628	FILTER FABRIC - INLET PROTECTION	EACH	43	43	0	0
• Δ	X0321907	STORM SEWERS, TYPE 2, WATER MAIN QUALITY PIPE, 12"	FOOT	694	694	0	0

Δ = SPECIALTY ITEM / • = SPECIAL PROVISION

SUMMARY OF QUANTITIES (SHEET 2 OF 2)

F.A.U. RTE.	SECTION	COUNTY	TOTAL SHEETS	SHEET NO.
6145	01-00590-00-BR	LaSALLE	168	5
STA. N/A		TO STA. N/A		
FED. ROAD DIST. NO. 3	ILLINOIS	FEDERAL AID PROJECT		

CONTRACT NO. 87293

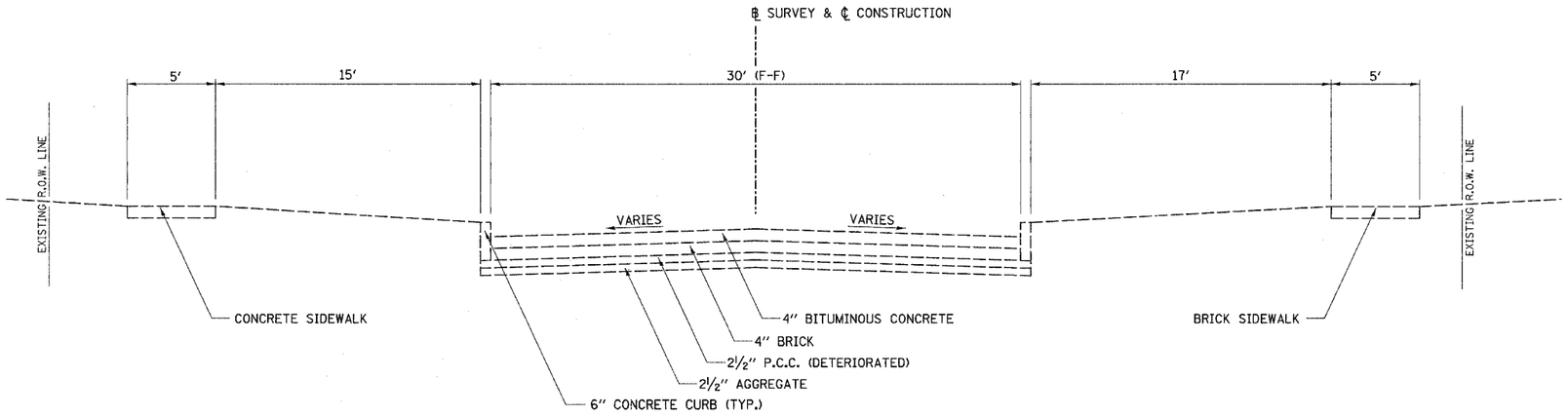

EXISTING TYPICAL SECTION
F.A.U. RTE. 6145 (BROADWAY ST.)

EVERETT ST. TO SHABBONA ST.

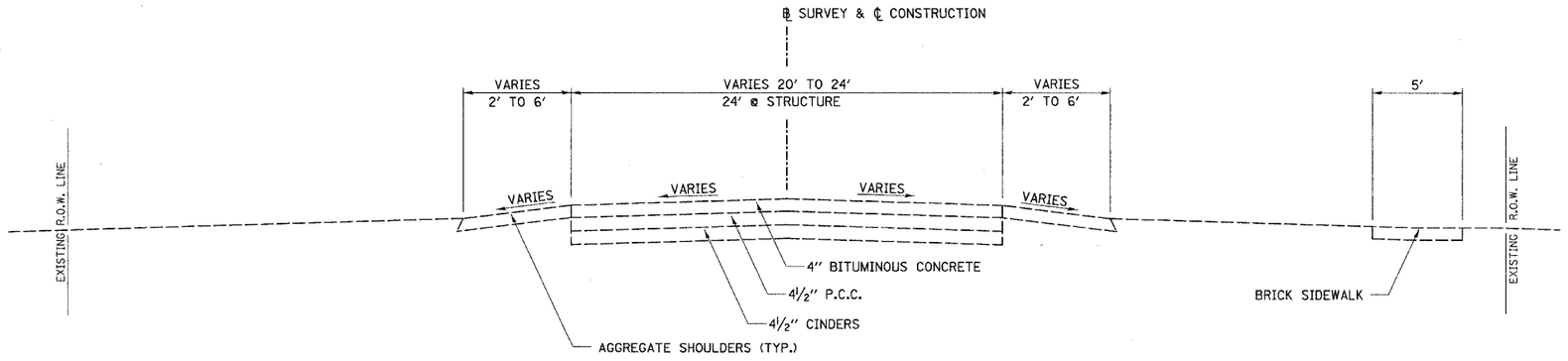

EXISTING TYPICAL SECTION
F.A.U. RTE. 6145 (BROADWAY ST.)

IOWA AVE. TO COLORADO ST.

F.A.U. RTE.	SECTION	COUNTY	TOTAL SHEETS	SHEET NO.
6145	01-00590-00-BR	LaSALLE	168	6
STA. N/A		TO STA. N/A		
FED. ROAD DIST. NO. 3	ILLINOIS	FEDERAL AID PROJECT		

CONTRACT NO. 87293

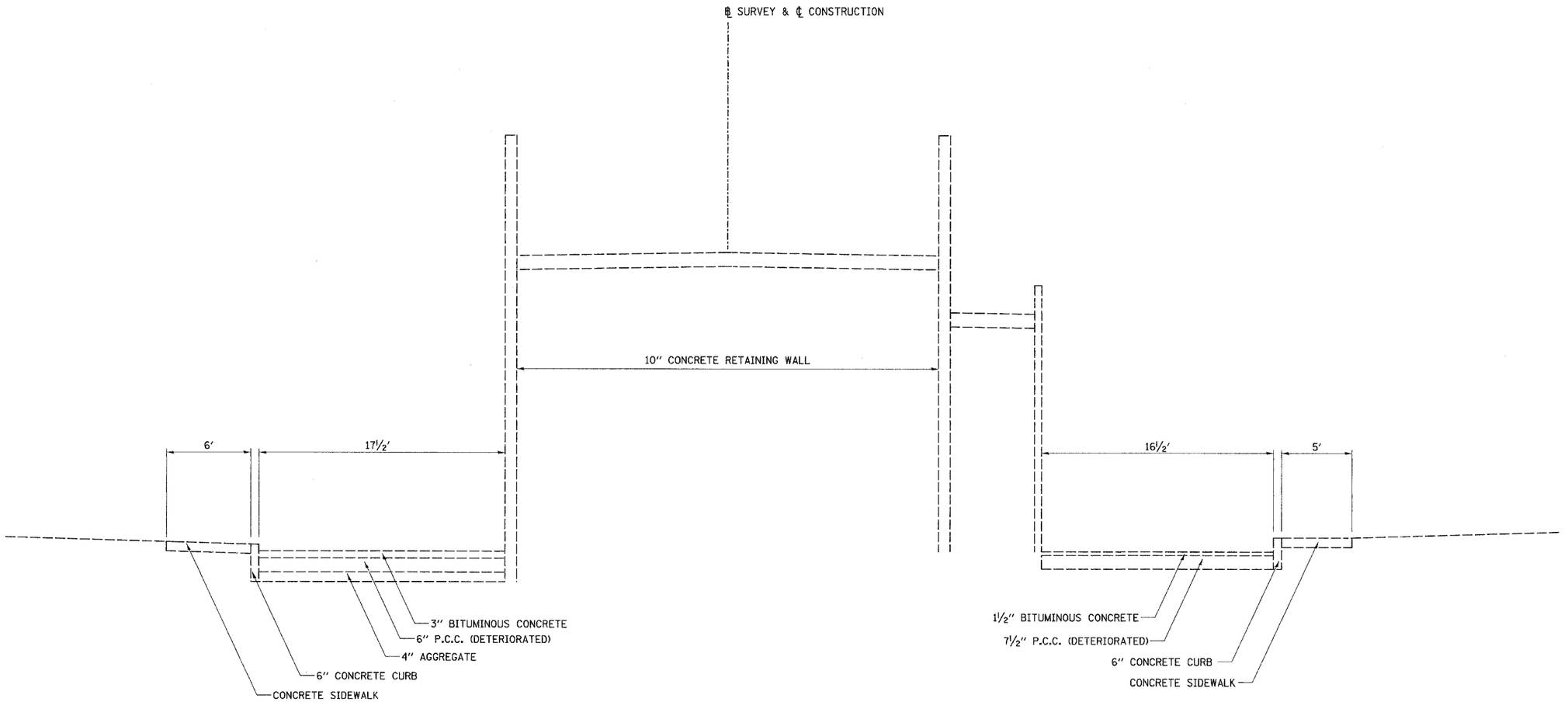

N.W. FRONTAGE ROAD

S.W. FRONTAGE ROAD

EXISTING TYPICAL SECTION

STA. 16+66.00 TO STA. 19+70.00

F.A.U. RTE.	SECTION	COUNTY	TOTAL SHEETS	SHEET NO.
6145	01-00590-00-BR	LaSALLE	168	7
STA. N/A		TO STA. N/A		
FED. ROAD DIST. NO. 3	ILLINOIS	FEDERAL AID PROJECT		

CONTRACT NO. 87293

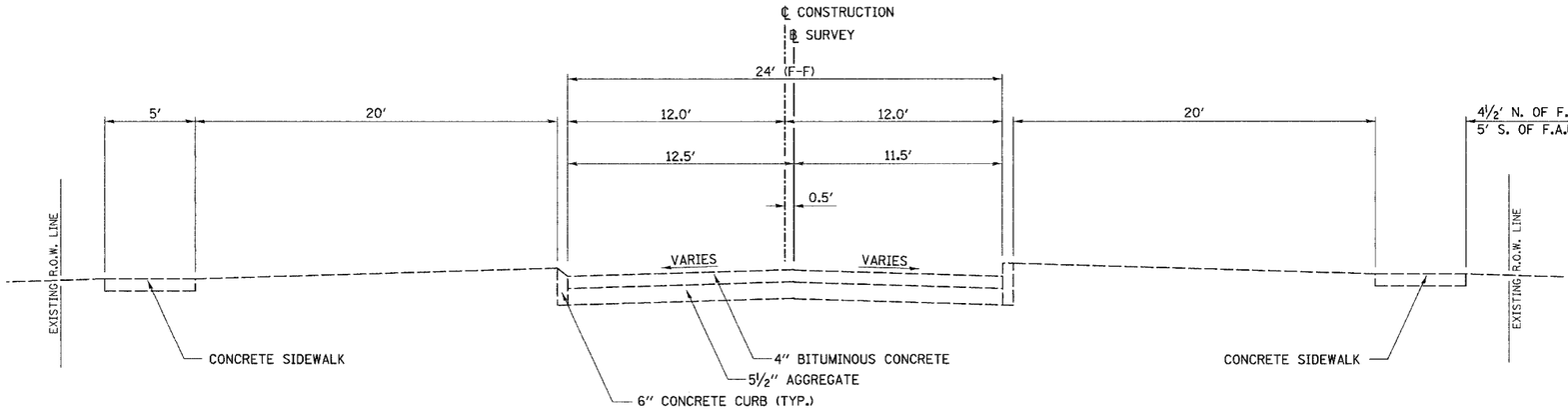

EXISTING TYPICAL SECTION
SHABBONA ST.

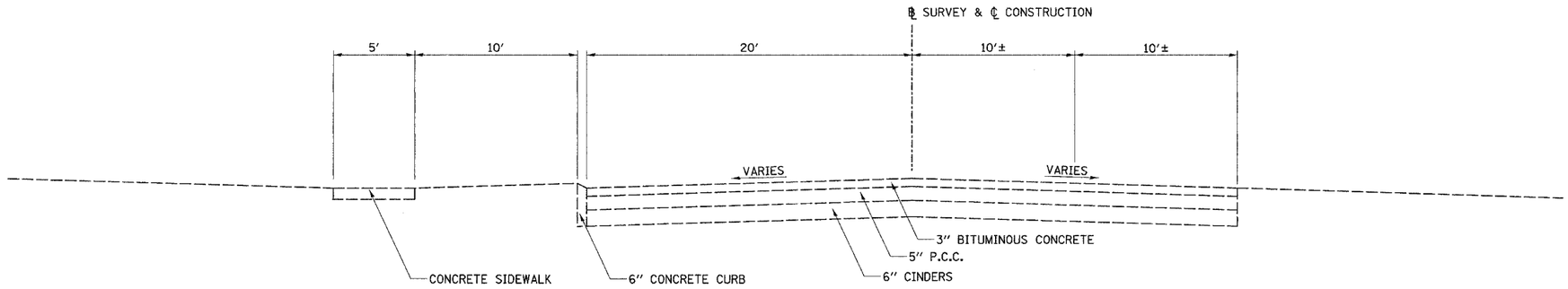

EXISTING TYPICAL SECTION
ILLINOIS ST.

SOUTH OF F.A.U. RTE. 6145 (BROADWAY ST.)

F.A.U. RTE.	SECTION	COUNTY	TOTAL SHEETS	SHEET NO.
6145	01-00590-00-BR	LaSALLE	168	8
STA. N/A		TO STA. N/A		
FED. ROAD DIST. NO. 3	ILLINOIS	FEDERAL AID PROJECT		

CONTRACT NO. 87293

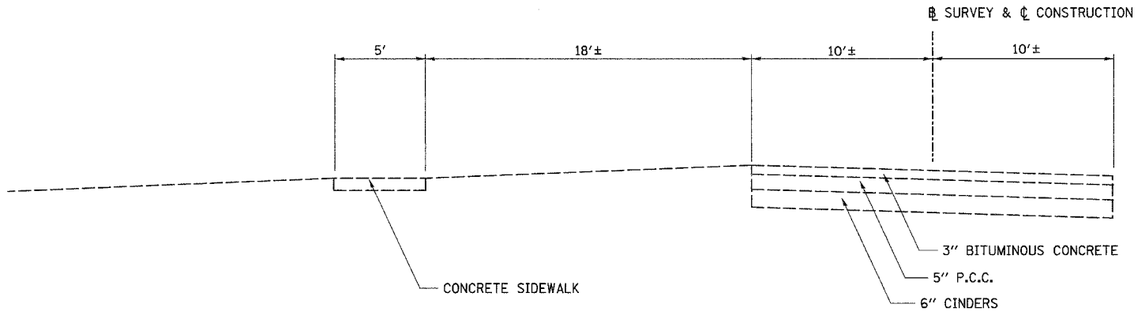

EXISTING TYPICAL SECTION
ILLINOIS ST.

NORTH OF F.A.U. RTE. 6145 (BROADWAY ST.)

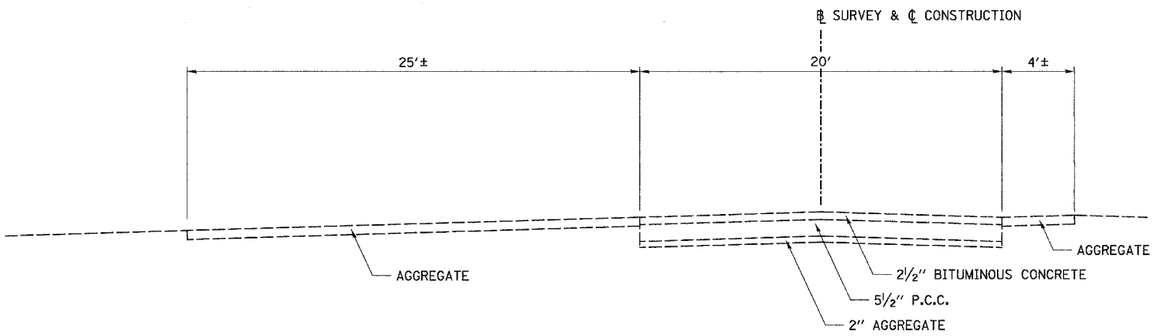

EXISTING TYPICAL SECTION
IOWA ST.

F.A.U. RTE.	SECTION	COUNTY	TOTAL SHEETS	SHEET NO.
6145	01-00590-00-BR	LaSALLE	168	9
STA. N/A		TO STA. N/A		
FED. ROAD DIST. NO. 3	ILLINOIS	FEDERAL AID PROJECT		

CONTRACT NO. 87293

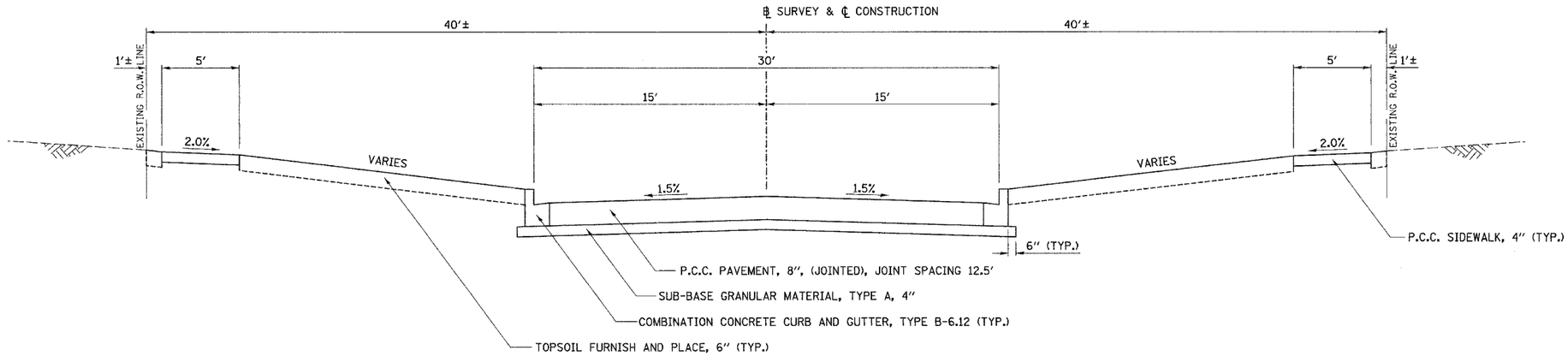

F.A.U. RTE. 6145 (BROADWAY ST.) STRUCTURAL PAVEMENT DESIGN

AVERAGE DAILY TRAFFIC (ADT)

YEAR:	ADT
2006	4485
2016	5105
2026	5725

CLASS II ROAD
SUB-GRADE SUPPORT RATING: POOR
PERCENT OF S.D.T. IN DESIGN LANE: 50%
STRUCTURAL DESIGN TRAFFIC (S.D.T.) YEAR 2016
P.V. = 4493 S.U. = 357 M.U. = 255
TRAFFIC FACTOR = 1.60
PAVEMENT STRUCTURE MATERIALS RECONSTRUCTION:

SURFACE COURSE TYPE: PORTLAND CEMENT CONCRETE PAVEMENT, 8", (JOINTED), JOINT SPACING 12.5'
NOTE:
FROM STA. 16+66.11 TO 19+84.62 AND FROM STA. 23+66.87 TO STA. 27+40.27
12" REQUIRED TO PROVIDE STRUCTURAL SUPPORT FOR PARAPET WALL.

SUB-BASE TYPE: SUB-BASE GRANULAR MATERIAL, TYPE A, 4"
NOTE:
FROM STA. 16+66.11 TO STA. 18+53.12 AND FROM STA. 24+98.37 TO STA. 27+40.27
12" REQUIRED FOR MSE WALL.

PROPOSED TYPICAL SECTION
F.A.U. RTE. 6145 (BROADWAY ST.)

STA. 15+20.00 TO STA. 16+66.11

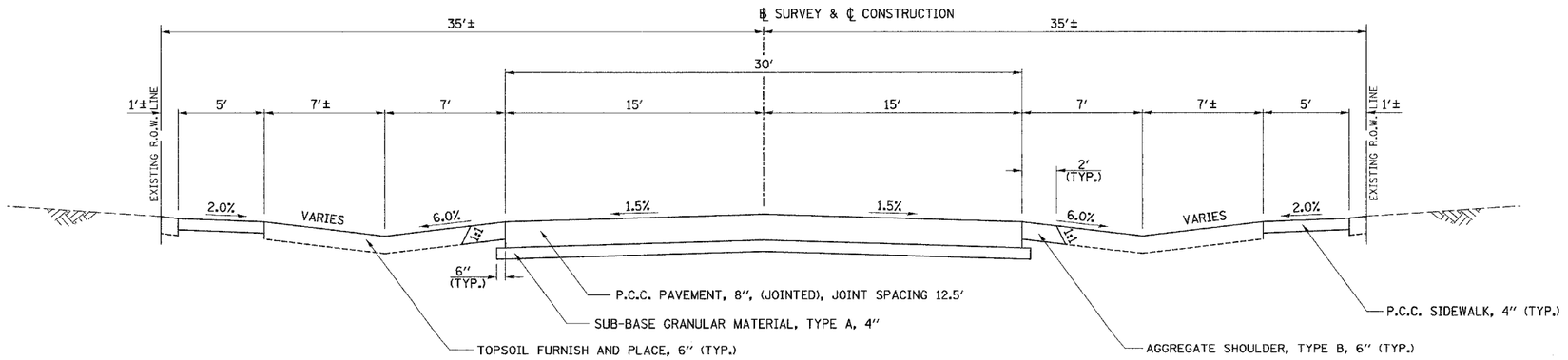

PROPOSED TYPICAL SECTION
F.A.U. RTE. 6145 (BROADWAY ST.)

STA. 27+40.27 TO STA. 29+00.00

F.A.U. RTE.	SECTION	COUNTY	TOTAL SHEETS	SHEET NO.
6145	01-00590-00-BR	LaSALLE	168	10
STA. N/A		TO STA. N/A		
FED. ROAD DIST. NO. 3	ILLINOIS	FEDERAL AID PROJECT		

CONTRACT NO. 87293

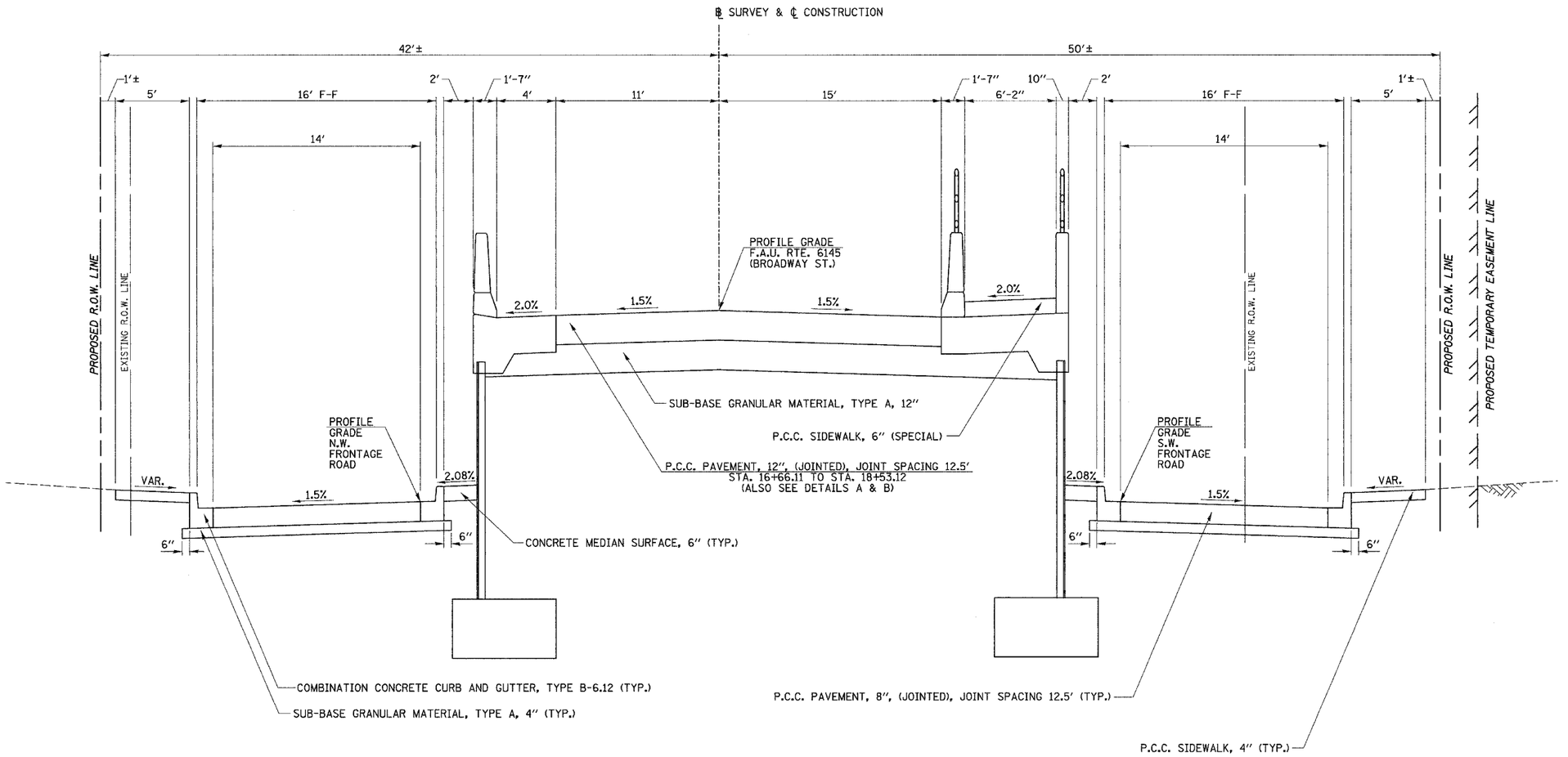

PROPOSED TYPICAL APPROACH CROSS SECTION

STA. 16+66.11 TO STA. 19+83.12

(SEE BRIDGE PLANS, SHEET NO. 6 OF 34)

PROPOSED TYPICAL BRIDGE CROSS SECTION

STA. 19+83.12 TO STA. 23+68.37

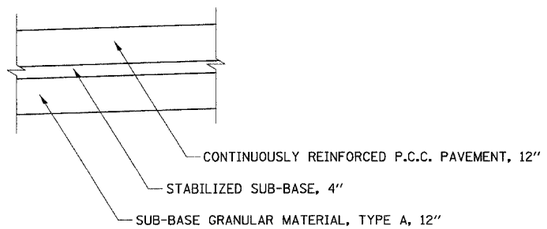

DETAIL A

STA. 18+53.12 TO STA. 19+53.12

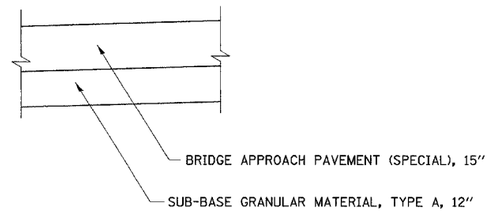

DETAIL B

STA. 19+53.12 TO STA. 19+83.12

F.A.U. RTE.	SECTION	COUNTY	TOTAL SHEETS	SHEET NO.
6145	01-00590-00-BR	LaSALLE	168	11
STA. N/A		TO STA. N/A		
FED. ROAD DIST. NO. 3	ILLINOIS	FEDERAL AID PROJECT		

CONTRACT NO. 87293

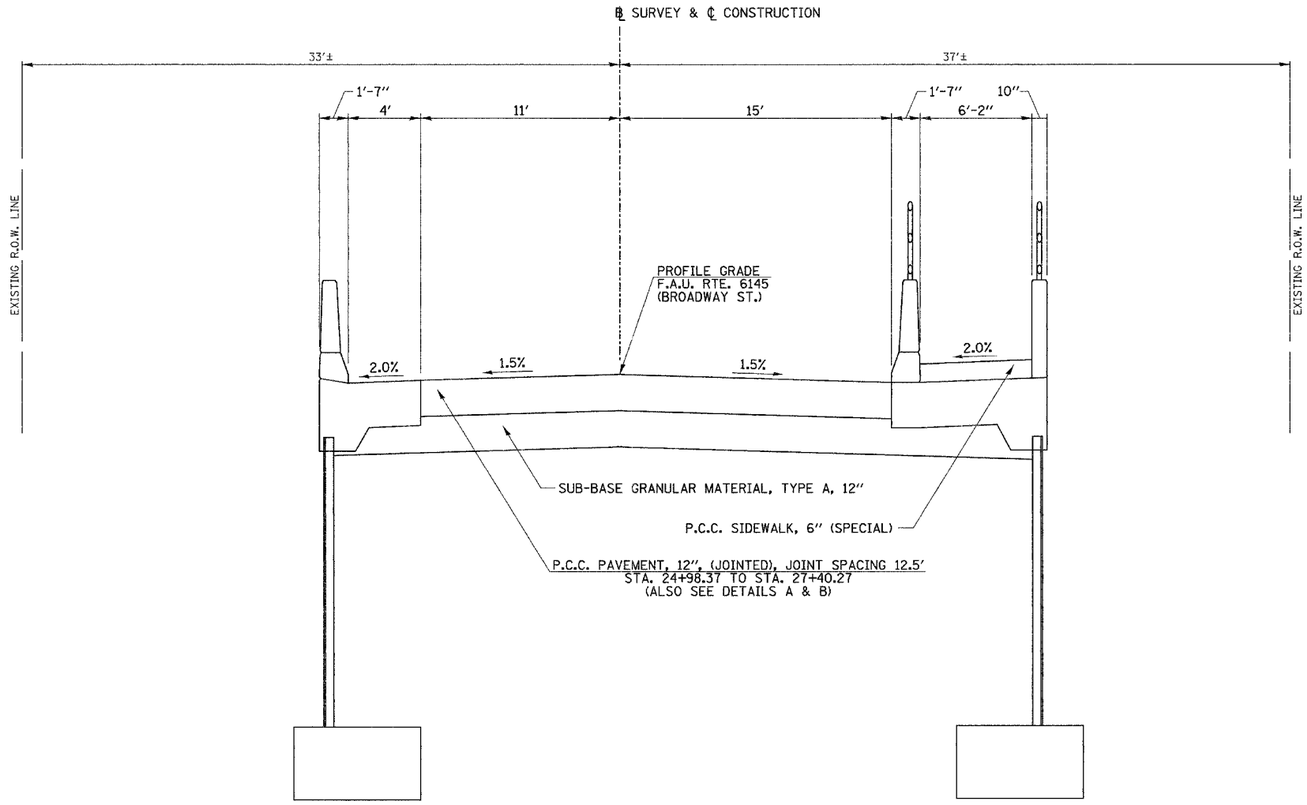

PROPOSED TYPICAL APPROACH CROSS SECTION

STA. 23+68.37 TO STA. 27+40.27

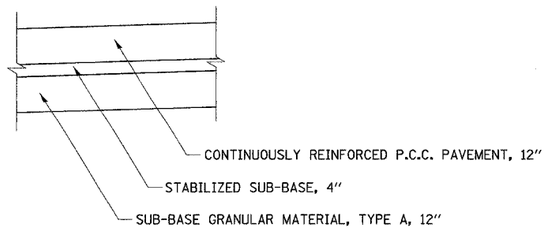

DETAIL A

STA. 23+98.37 TO STA. 24+98.37

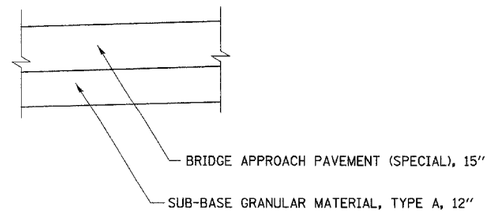

DETAIL B

STA. 23+68.37 TO STA. 23+98.37

F.A.U. RTE.	SECTION	COUNTY	TOTAL SHEETS	SHEET NO.
6145	01-00590-00-BR	LaSALLE	168	12
STA. N/A		TO STA. N/A		
FED. ROAD DIST. NO. 3	ILLINOIS	FEDERAL AID PROJECT		

CONTRACT NO. 87293

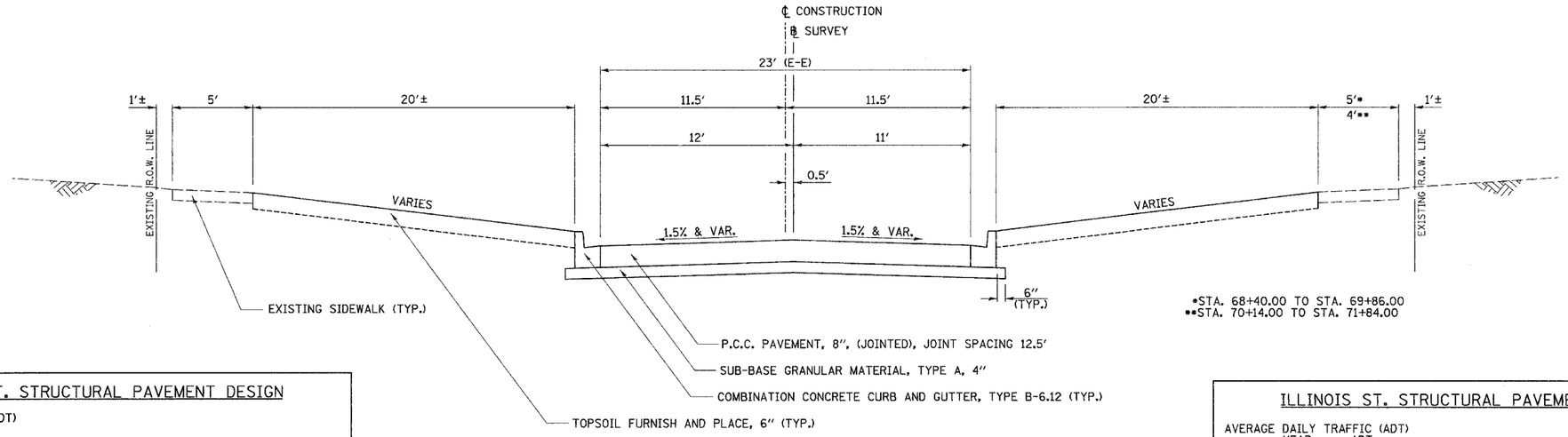

*STA. 68+40.00 TO STA. 69+86.00
**STA. 70+14.00 TO STA. 71+84.00

SHABBONA ST. STRUCTURAL PAVEMENT DESIGN

AVERAGE DAILY TRAFFIC (ADT)

YEAR:	ADT
2006	763
2016	871
2026	979

CLASS III ROAD
SUB-GRADE SUPPORT RATING: POOR
PERCENT OF S.D.T. IN DESIGN LANE: 50%
STRUCTURAL DESIGN TRAFFIC (S.D.T.) YEAR 2016
P.V. = 766 S.U. = 61 M.U. = 44

TRAFFIC FACTOR = 0.27 (MIN. 0.50)

PAVEMENT STRUCTURE MATERIALS RECONSTRUCTION:

SURFACE COURSE TYPE: P.C.C. PAVEMENT, 8″, (JOINTED), JOINT SPACING 12.5′

SUB-BASE TYPE: SUB-BASE GRANULAR MATERIAL, TYPE A, 4″

PROPOSED TYPICAL SECTION
SHABBONA ST.

STA. 68+37.58 TO STA. 69+86.00
STA. 70+14.00 TO STA. 71+96.93

ILLINOIS ST. STRUCTURAL PAVEMENT DESIGN

AVERAGE DAILY TRAFFIC (ADT)

YEAR:	ADT
2006	541
2016	617
2026	694

CLASS III ROAD
SUB-GRADE SUPPORT RATING: POOR
PERCENT OF S.D.T. IN DESIGN LANE: 50%
STRUCTURAL DESIGN TRAFFIC (S.D.T.) YEAR 2016
P.V. = 543 S.U. = 43 M.U. = 31
TRAFFIC FACTOR = 0.23 (MIN. 0.50)

PAVEMENT STRUCTURE MATERIALS RECONSTRUCTION:

SURFACE COURSE TYPE: P.C.C. PAVEMENT, 8″, (JOINTED), JOINT SPACING 12.5′

SUB-BASE TYPE: SUB-BASE GRANULAR MATERIAL, TYPE A, 4″

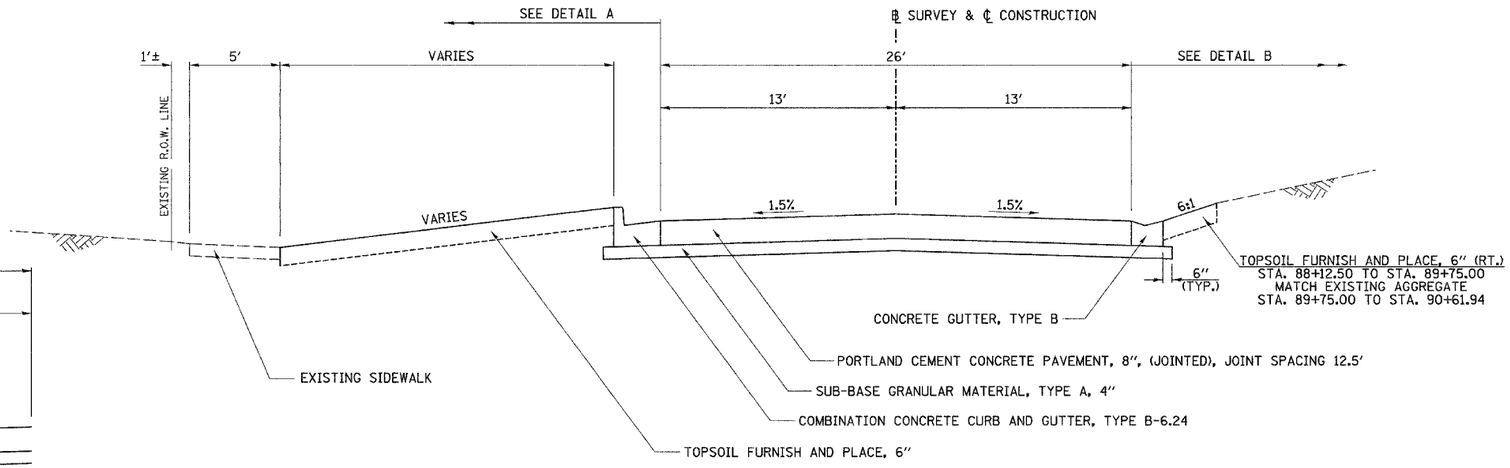

PROPOSED TYPICAL SECTION
ILLINOIS ST.

STA. 88+12.88 TO STA. 92+50.90

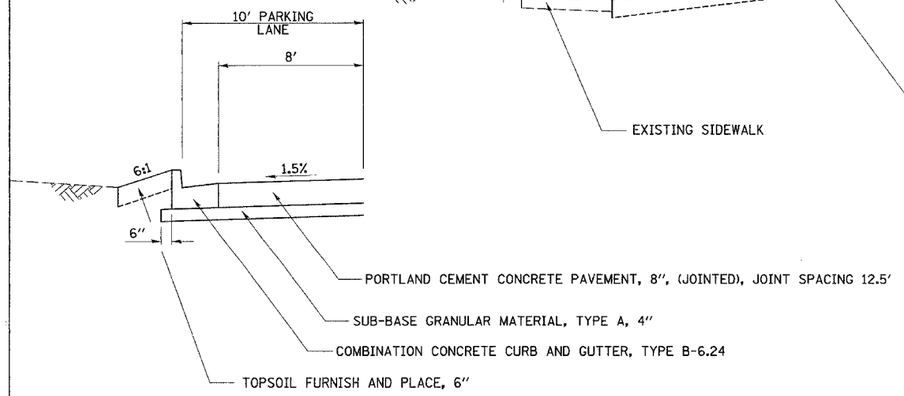

DETAIL A

STA. 90+87.63 TO STA. 91+09.48
STA. 92+26.36 TO STA. 92+50.90

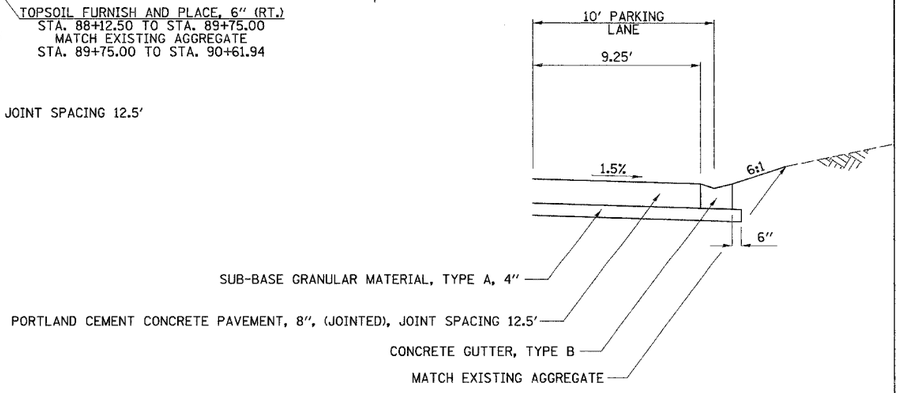

DETAIL B

STA. 90+61.94 TO STA. 92+50.90

2190T008

SHABBONA ST. & ILLINOIS ST., PROPOSED TYPICAL SECTIONS

F.A.U. RTE.	SECTION	COUNTY	TOTAL SHEETS	SHEET NO.
6145	01-00590-00-BR	LaSALLE	168	13
STA. N/A		TO STA. N/A		
FED. ROAD DIST. NO. 3	ILLINOIS	FEDERAL AID PROJECT		

CONTRACT NO. 87293

PROTECTIVE COAT

SURFACE	AREA SQ YD
COMBINATION CONCRETE CURB & GUTTER, TYPE B-6.12	538.8
COMBINATION CONCRETE CURB & GUTTER, TYPE B-6.24	137.8
TYPE B GUTTER	89.7
PORTLAND CEMENT CONCRETE PAVEMENT, 8" (JOINTED)	5432.0
PORTLAND CEMENT CONCRETE PAVEMENT, 12" (JOINTED)	1247.8
CONTINUOUSLY REINFORCED PORTLAND CEMENT CONCRETE PAVEMENT 12"	577.8
BRIDGE APPROACH PAVEMENT (SPECIAL)	173.0
TOTAL	8196.9
USE	8197

FENCE REMOVAL

STATION	OFFSET	TO	STATION	OFFSET	LENGTH FOOT
E. BROADWAY ST.					
19+02.2	38.9' LT.	TO	19+57.1	39.1' LT.	58.0
				TOTAL	58.0
				USE	58

EARTHWORK

1 LOCATION			2 EARTH EXCAVATION	3 EARTH EXCAVATION TO BE USED IN EMBANKMENT ADJUSTED FOR SHRINKAGE	4 EMBANKMENT	5 EARTHWORK BALANCE WASTE(+) OR SHORTAGE(-)
STATION	TO	STATION	CU YD			
E. BROADWAY ST.						
15+20.00	TO	16+65.75	51.4	38.5	294.0	-255.5
23+75.00	TO	29+00.00	161.6	121.2	113.3	7.8
		SUBTOTAL	212.9			-247.6
SHABBONA ST.						
68+37.58	TO	71+96.93	203.5	152.6	203.1	-50.5
		SUBTOTAL	203.5			-50.5
N.W. FRONTAGE RD.						
16+39.36	TO	20+00.00	153.3	115.0	42.1	72.9
		SUBTOTAL	153.3			72.9
S.W. FRONTAGE RD.						
16+36.93	TO	20+00.00	190.0	142.5	39.6	103.0
		SUBTOTAL	190.0			103.0
ILLINOIS ST.						
88+12.88	TO	92+50.90	48.4	36.3	268.2	-231.9
		SUBTOTAL	48.4			-231.9
		TOTAL	808.1			-354.1
		USE	810			-355

SHRINKAGE FACTORS: 25%

EARTH EXCAVATION:

COLUMN 1 & 4 - LOCATION AND QUANTITIES FROM CROSS SECTIONS.

CUT = EARTH EXCAVATION FILL = EMBANKMENT

COLUMN 3 = (COLUMN 2) x (1 - EARTH EXCAVATION SHRINKAGE FACTOR)

COLUMN 5 = COLUMN 4 - COLUMN 3

PAY ITEMS:

EARTH EXCAVATION: 810 CU YDS

FURNISHED EXCAVATION: 355 CU YDS

TOPSOIL, SODDING, NUTRIENTS, TEMPORARY EROSION CONTROL SEEDING AND SUPPLEMENTAL WATERING

STATION	TO	STATION	SIDE	TOPSOIL FURNISH AND PLACE, 6"	SODDING	AREA	NITROGEN FERTILIZER NUTRIENT	PHOSPHOROUS FERTILIZER NUTRIENT	POTASSIUM FERTILIZER NUTRIENT	TEMPORARY EROSION CONTROL SEEDING	SUPPLEMENTAL WATERING
				SQ YD		ACRE	POUND				UNIT
E. BROADWAY ST.											
15+19.4	TO	15+38.2	LT.	30.7	30.7	0.006	0.4	0.4	0.4	10.1	0.09
15+44.1	TO	15+88.2	LT.	66.7	66.7	0.014	0.9	0.9	0.9	22.1	0.20
15+93.2	TO	16+03.8	LT.	5.2	5.2	0.001	0.1	0.1	0.1	1.7	0.02
23+61.8	TO	27+64.8	LT.	679.0	679.0	0.140	8.5	8.5	8.5	224.5	2.04
27+87.8	TO	28+09.1	LT.	21.8	21.8	0.005	0.3	0.3	0.3	7.2	0.07
28+09.1	TO	29+00.7	LT.	169.6	169.6	0.035	2.2	2.2	2.2	56.1	0.51
15+19.4	TO	15+88.6	RT.	125.5	125.5	0.026	1.6	1.6	1.6	41.5	0.38
15+93.5	TO	16+02.7	RT.	6.1	6.1	0.001	0.1	0.1	0.1	2.0	0.02
23+61.8	TO	27+62.9	RT.	682.4	682.4	0.141	8.5	8.5	8.5	225.6	2.05
27+85.7	TO	28+59.5	RT.	233.5	233.5	0.048	2.9	2.9	2.9	77.2	0.70
28+71.2	TO	29+00.7	RT.	54.9	54.9	0.011	0.7	0.7	0.7	18.1	0.16
SHABBONA ST.											
68+37.2	TO	69+62.1	LT.	249.2	249.2	0.051	3.1	3.1	3.1	82.4	0.75
70+36.2	TO	71+75.5	LT.	303.0	303.0	0.063	3.8	3.8	3.8	100.2	0.91
71+87.1	TO	71+96.9	LT.	4.0	4.0	0.001	0.1	0.1	0.1	1.3	0.01
68+37.3	TO	68+47.6	RT.	5.6	5.6	0.001	0.1	0.1	0.1	1.9	0.02
68+67.0	TO	69+44.9	RT.	134.4	134.4	0.028	1.7	1.7	1.7	44.4	0.40
70+61.8	TO	71+42.0	RT.	127.5	127.5	0.026	1.6	1.6	1.6	42.1	0.38
71+54.0	TO	71+97.3	RT.	85.9	85.9	0.018	1.1	1.1	1.1	28.4	0.26
N.W. FRONTAGE RD.											
16+63.1	TO	17+35.9	LT.	30.7	30.7	0.006	0.4	0.4	0.4	10.1	0.09
17+40.7	TO	17+59.9	LT.	2.8	2.8	0.001	0.1	0.1	0.1	0.9	0.01
17+74.9	TO	18+47.1	LT.	7.4	7.4	0.002	0.1	0.1	0.1	2.4	0.02
18+50.0	TO	18+81.1	LT.	3.3	3.3	0.001	0.1	0.1	0.1	1.1	0.01
19+00.3	TO	19+38.1	LT.	4.3	4.3	0.001	0.1	0.1	0.1	1.4	0.01
19+48.3	TO	19+57.2	LT.	0.7	0.7	0.000	0.1	0.1	0.1	0.2	0.00
16+95.3	TO	19+74.8	LT.	1.3	1.3	0.000	0.1	0.1	0.1	0.4	0.00
S.W. FRONTAGE RD.											
16+62.6	TO	17+32.5	RT.	17.4	17.4	0.004	0.3	0.3	0.3	5.8	0.05
17+37.2	TO	17+56.4	RT.	8.9	8.9	0.002	0.2	0.2	0.2	2.9	0.03
17+65.1	TO	18+05.2	RT.	18.7	18.7	0.004	0.3	0.3	0.3	6.2	0.06
18+26.0	TO	18+95.7	RT.	21.4	21.4	0.004	0.3	0.3	0.3	7.1	0.06
19+06.0	TO	19+35.3	RT.	10.9	10.9	0.002	0.2	0.2	0.2	3.6	0.03
19+38.5	TO	19+68.6	RT.	11.5	11.5	0.002	0.2	0.2	0.2	3.8	0.03
19+73.8	TO	19+89.1	RT.	12.6	12.6	0.003	0.2	0.2	0.2	4.2	0.04
ILLINOIS ST.											
88+12.3	TO	88+22.9	LT.	8.8	8.8	0.002	0.2	0.2	0.2	2.9	0.03
88+46.9	TO	89+35.1	LT.	238.2	238.2	0.049	3	3.0	3	78.8	0.71
90+46.9	TO	91+12.0	LT.	66.6	66.6	0.014	0.9	0.9	0.9	22.0	0.20
92+00.8	TO	92+51.4	LT.	89.9	89.9	0.019	1.2	1.2	1.2	29.7	0.27
88+12.5	TO	89+76.1	RT.	128.2	128.2	0.026	1.6	1.6	1.6	42.4	0.38
			TOTAL	3668.5	3668.5		47.3	47.3	47.3	1212.7	11.0
			USE	3669	3669		48	48	48	1213	11

SIXTEEN APPLICATIONS HAS BEEN ASSUMED FOR TEMPORARY SEEDING.

ONE APPLICATION HAS BEEN ASSUMED FOR SUPPLEMENTAL WATERING.

TREE REMOVAL

STATION	OFFSET	(OVER 15 UNITS DIAMETER) UNIT
E. BROADWAY ST.		
17+12.15	45.4' RT.	39.0
	TOTAL	39.0
	USE	39

PIPE DRAINS, 6"

STATION	OFFSET	TO	STATION	OFFSET	FOOT
E. BROADWAY ST.					
19+75.00	C.L.	TO	19+75.00	56.54 RT.	55.0
24+00.00	C.L.	TO	24+00.00	32.00 RT.	30.0
				TOTAL	85.0
				USE	85

F.A.U. RTE.	SECTION	COUNTY	TOTAL SHEETS	SHEET NO.
6145	01-00590-00-BR	LaSALLE	168	14
STA. N/A	TO STA. N/A			
FED. ROAD DIST. NO. 3	ILLINOIS	FEDERAL AID PROJECT		

CONTRACT NO. 87293

PAVEMENT

STATION	TO	STATION	SUB-BASE GRANULAR MATERIAL, TYPE A	PORTLAND CEMENT CONCRETE PAVEMENT, 8" (JOINTED)	PORTLAND CEMENT CONCRETE PAVEMENT, 12" (JOINTED)	CONTINUOUSLY REINFORCED PORTLAND CEMENT CONCRETE PAVEMENT 12"	PAVEMENT REINFORCEMENT 12"	STABILIZED SUB-BASE 4"
			TON	SQ YD	SQ YD	SQ YD	SQ YD	SQ YD
E. BROADWAY ST.								
15+20.0	TO	15+56.9	30.2	115.3				
15+56.9	TO	16+66.11	87.7	381.2				
16+66.11	TO	18+53.12	370.4		542.0			
18+53.12	TO	19+53.12	197.4			288.9	288.9	288.9
BRIDGE OMISSION								
23+98.37	TO	24+98.37	197.4			288.9	288.9	288.9
24+98.37	TO	27+40.27	482.3		705.8			
27+40.3	TO	28+28.3	78.0	342.4				
28+28.3	TO	29+00.0	54.2	238.0				
SHABBONA ST.								
68+37.6	TO	69+04.1	47.0	170.1				
69+04.1	TO	69+86.0	92.7	356.4				
70+14.0	TO	71+22.3	113.1	433.7				
71+22.3	TO	71+96.9	51.3	190.8				
N.W. FRONTAGE RD.								
16+46.5	TO	17+26.8	37.3	126.6				
17+26.8	TO	19+62.6	110.1	374.3				
19+62.6	TO	19+99.6	24.4	80.6				
S.W. FRONTAGE RD.								
16+43.6	TO	16+91.7	22.3	76.6				
16+91.7	TO	19+58.5	122.8	415.0				
19+58.5	TO	19+99.6	37.6	122.9				
ILLINOIS ST.								
88+12.9	TO	88+99.1	68.4	249.1				
88+99.1	TO	90+61.9	119.8	484.8				
90+61.9	TO	90+87.6	26.5	101.2				
90+87.6	TO	91+13.5	31.7	122.3				
91+13.5	TO	92+26.4	115.7	441.2				
92+26.4	TO	92+50.9	29.2	110.9				
IOWA ST.								
109+22.8	TO	109+85.1	58.8	238.8				
110+14.4	TO	110+63.6	63.1	259.8				
		TOTAL	2669.4	5432.0	1247.8	577.8	577.8	577.8
		USE	2670	5432	1248	578	578	578

WORK ZONE PAVEMENT MARKING REMOVAL

STATION	TO	STATION	LANE LINE YELLOW - 4"	LANE LINE WHITE - 6"	LANE LINE WHITE - 24"
			SQ FT		
TEMPORARY PAVEMENT MARKING					
E. BROADWAY ST.					
15+20.00	TO	29+00	715.0	126.4	
SHABBONA ST.					
68+13	TO	72+22	30.0	79.6	62.0
N.W. FRONTAGE RD.					
16+52	TO	19+97		55.8	28.2
S.W. FRONTAGE RD.					
16+52	TO	19+96		50.5	49.6
ILLINOIS ST.					
87+88	TO	92+76	43.3		
IOWA ST.					
108+97	TO	111+03		76.0	52.8
SHORT TERM PAVEMENT MARKING					
E. BROADWAY ST.					
15+20.00	TO	26+25	46.7		
SHABBONA ST.					
68+13	TO	72+22	13.3		
ILLINOIS ST.					
87+88	TO	92+76	16.0		
86+53					20.8
94+21					22.2
		TOTAL	864.3	388.3	235.6
		USE		1488	

SHORT-TERM PAVEMENT MARKING

STATION TO STATION	CENTER LINE SKIP DASH - YELLOW 4"	STOP BARS WHITE 6 - 4" STRIPES
	FOOT	
SHORT-TERM PAVEMENT MARKING		
E. BROADWAY ST.		
15+20.00 TO 29+25.00	140.0	
SHABBONA ST.		
68+12.58 TO 72+21.93	40.0	
ILLINOIS ST.		
87+87.88 TO 92+75.90	48.0	
86+52.88		62.3
89+54.23 TO 89+85.49		206.6
94+20.90		66.5
ONE APPLICATION	228.0	335.4
USE	564	

TEMPORARY PAVEMENT MARKING

STATION	TO	STATION	LANE LINE SKIP DASH - YELLOW - 4"	LANE LINE SOLID - YELLOW - 4" (DOUBLE)	CROSSWALK LINES SOLID - WHITE - 6"	STOP BARS WHITE - 24"
			FOOT			
E. BROADWAY ST.						
15+20.0	TO	16+27.0			78.1	
16+27.0	TO	27+34.9		2145.0	82.5	
27+34.9	TO	29+00.0			92.1	
SHABBONA ST.						
68+12.6	TO	70+00.0	40.0		77.2	16.0
70+00.0	TO	72+21.9	50.0		82.0	15.00
N.W. FRONTAGE RD.						
16+52.0	TO	19+97.1			111.5	14.1
S.W. FRONTAGE RD.						
16+52.40	TO	19+96.1			101.0	24.8
ILLINOIS ST.						
87+87.9	TO	92+75.9	130.0			
IOWA ST.						
108+97.1	TO	110+00.0			78.12	13.4
110+00.0	TO	111+03.4			73.90	13.0
		TOTAL	220.0	2145.0	776.4	96.3
		USE	2365		777	97

LOCATION: SEE SCHEDULE BELOW	
MIXTURE USE	SURFACE
AC TYPE	PG 64-22
DESIGN AIR VOIDS	4% @ Ndes=50
RAP%: MAX. ALLOWABLE**	15%
MIXTURE COMPOSITION	IL-12.5
FRICTION AGGREGATE	MIXTURE C
PLANT CONTROL LIMITS	CLASS I

** IF RAP OPTION IS SELECTED, THE ASPHALT CEMENT GRADE MAY NEED TO BE ADJUSTED. THIS WILL BE DETERMINED BY THE ENGINEER.

MILLING AND RESURFACING

LOCATION STATION	TO	LOCATION STATION	BITUMINOUS SURFACE REMOVAL, 2"	BITUMINOUS MATERIALS (PRIME COAT)	AGGREGATE (PRIME COAT)	BITUMINOUS CONCRETE SURFACE COURSE, SUPERPAVE, MIX "C", N=50, 2"	SAW CUTS
			SQ YD	GALLON	TON	TON	FOOT
E. BROADWAY ST.							
14+95	TO	15+20	84.4	6.8	0.17	9.5	31.3
29+00	TO	29+25	81.3	6.5	0.16	9.1	29.2
SHABBONA ST.							
68+12.59	TO	68+37.58	68.6	5.5	0.14	7.7	26.0
71+96.93	TO	72+21.93	68.3	5.5	0.14	7.6	26.0
ILLINOIS ST.							
87+87.88	TO	88+12.88	56.7	4.5	0.11	6.4	21.3
92+50.90	TO	92+75.90	56.7	4.5	0.11	6.4	20.4
IOWA ST.							
108+97.82	TO	109+22.82	58.3	4.7	0.12	6.5	21.0
110+78.06	TO	111+03.06	63.8	5.1	0.13	7.1	23.0
		TOTAL	538.1	43.0	1.1	60.3	198.2
		USE	539	43	1	61	199

TEMPORARY RAMP

LOCATION STATION	TO	LOCATION STATION	TEMPORARY RAMP SQ YD
E. BROADWAY ST.			
14+95.00	TO	15+01.00	20.2
15+14.00	TO	15+20.00	20.2
29+00.00	TO	29+06.00	19.4
29+19.00	TO	29+25.00	19.4
SHABBONA ST.			
68+12.59	TO	68+18.59	16.3
68+31.58	TO	68+37.58	16.3
71+96.93	TO	72+02.93	16.4
72+15.93	TO	72+21.93	16.4
ILLINOIS ST.			
87+87.88	TO	87+93.88	13.3
88+06.88		88+12.88	14.2
92+50.90	TO	92+56.90	13.6
92+69.90		92+75.90	13.6
IOWA ST.			
108+97.82	TO	109+03.82	13.9
109+16.82		109+22.82	13.9
110+78.06	TO	110+84.06	15.9
110+97.06		111+03.06	15.9
		TOTAL	258.9
		USE	259

F.A.U. RTE.	SECTION	COUNTY	TOTAL SHEETS	SHEET NO.
6145	01-00590-00-BR	LaSALLE	168	15
STA. N/A		TO STA. N/A		
FED. ROAD DIST. NO. 3	ILLINOIS	FEDERAL AID PROJECT		

CONTRACT NO. 87293

PAVEMENT PATCHING, 8"

STATION	OFFSET	TO	STATION	OFFSET	TRENCH WIDTH	PATCH WIDTH	LENGTH	TYPE II	TYPE III	TYPE IV
					FOOT			SQ YD		
ILLINOIS ST.										
88+20.0	15.0' LT.	TO	88+20.0	11.3' RT.	2.83	4.83	26.3	14.1		
89+42.6	30.1' LT.	TO	89+40.6	11.7' RT.	4.33	6.33	41.8			29.4
90+40.8	28.6' LT.	TO	90+40.2	10.2' RT.	2.83	4.83	38.8		20.8	
91+20.0	15.1' LT.	TO	91+20.0	7.8' RT.	2.83	4.83	22.9	12.3		
91+70.0	12.7' LT.	TO	91+70.0	8.4' RT.	2.83	4.83	21.1	11.3		
89+30.0	27.7' LT.	TO	89+58.0	C.L.	5.50	7.50	39.4			32.8
89+58.0	C.L.	TO	90+34.0	C.L.	5.50	7.50	76.0			63.3
90+34.0	C.L.	TO	90+63.2	22.6' LT.	5.50	7.50	36.9			30.8
IOWA ST.										
109+25.6	9.8' LT.	TO	109+39.3	11.1' RT.	4.33	6.33	25.0		17.6	
							TOTAL	37.7	38.4	156.3
							USE	38	39	157

COMBINATION CURB AND GUTTER REMOVAL

LOCATION			SIDE	LENGTH
STATION	TO	STATION		FOOT
E. BROADWAY ST.				
14+95.00	TO	15+92.88	LT.	97.9
14+95.00	TO	15+88.52	RT.	93.5
INTERSECTION E. BROADWAY ST. AND SHABBONA ST.				
N.W. QUADRANT				77.1
S.W. QUADRANT				61.0
N.E. QUADRANT				69.4
S.E. QUADRANT				31.7
SHABBONA ST.				
68+37.58	TO	69+37.45	LT.	99.9
70+82.77	TO	71+96.93	LT.	114.2
68+37.58	TO	69+37.45	RT.	99.9
70+82.77	TO	71+96.93	RT.	114.2
N.W. FRONTAGE RD.				
16+69.97	TO	19+71.69	LT.	301.7
INTERSECTION OF S.W. FRONTAGE RD. AND ILLINOIS ST.				
N.W. QUADRANT			LT.	42.2
S.W. FRONTAGE RD.				
16+52.48	TO	19+74.73	RT.	322.3
INTERSECTION OF S.W. FRONTAGE RD. AND ILLINOIS ST.				
S.W. QUADRANT			LT.	20.3
ILLINOIS ST.				
88+18.26	TO	89+50.96	LT.	132.7
INTERSECTION OF E. BROADWAY ST. AND IOWA ST.				
S.W. QUADRANT				16.0
N.W. QUADRANT				9.2
TOTAL				1703.2
USE				1704

PAVEMENT REMOVAL

STATION	TO	STATION	SIDE	AREA SQ YD
E. BROADWAY ST.				
15+20.00	TO	15+50.00		101.2
15+50.00	TO	16+65.73		389.3
16+65.73	TO	17+89.18		202.1
26+23.82	TO	27+39.55		307.2
27+39.55	TO	29+00.00		506.0
SHABBONA ST.				
68+37.58	TO	69+37.45		270.6
69+37.45	TO	69+85.07		221.0
70+15.23	TO	70+82.77		278.4
70+82.77	TO	71+96.93		311.6
ILLINOIS ST.				
88+12.88	TO	88+18.26		12.9
88+18.26	TO	89+99.98		842.8
89+99.98	TO	92+50.90		800.5
IOWA ST.				
109+22.82	TO	109+55.63		77.5
109+55.63	TO	109+89.21		167.5
110+16.04	TO	110+59.92		184.7
110+59.92	TO	110+78.06		47.8
N.W. FRONTAGE RD.				
16+65.73	TO	18+00.00	LT.	264.7
18+00.00	TO	19+84.73	LT.	361.0
S.W. FRONTAGE RD.				
16+65.73	TO	18+00.00	RT	242.5
18+00.00	TO	19+84.73	RT	358.9
BETWEEN N.W. & S.W. FRONTAGE RD.				
19+69.46	TO	19+84.73		51.8
			TOTAL	6000.0
			USE	6000

SIDEWALK REMOVAL

STATION	TO	STATION	SIDE	AREA SQ FT
INTERSECTION OF E. BROADWAY ST. AND SHABBONA ST.				
N.W. QUADRANT			N.W.	202.8
S.W. QUADRANT			S.W.	168.2
E. BROADWAY ST.				
16+65.73	TO	17+89.17	RT.	809.2
23+61.04	TO	27+51.13	RT.	1617.4
26+22.69	TO	27+38.62	RT.	759.4
28+07.80	TO	28+60.37	RT.	259.3
28+70.23	TO	29+00.00	RT.	142.0
SHABBONA ST.				
69+48.26	TO	69+62.77	RT.	71.8
70+39.08	TO	70+59.57	RT.	94.8
N.W. FRONTAGE RD.				
16+57.81	TO	18+00.00	LT.	643.6
18+00.00	TO	19+79.83	LT.	1008.6
S.W. FRONTAGE RD.				
16+52.49	TO	18+00.00	RT.	692.8
18+00.00	TO	19+78.86	RT.	799.6
ILLINOIS ST.				
89+46.18	TO	89+63.10	LT.	85.6
90+38.19	TO	90+59.94	LT.	125.8
INTERSECTION OF E. BROADWAY ST. AND IOWA ST.				
S.E. QUADRANT (STEPS)				222.6
PRIVATE ACCESS				
17+52.61			RT.	37.8
18+81.40			RT.	68.7
19+37.01			RT.	72.8
28+37.89			RT.	58.6
28+63.38			RT.	6.4
28+68.57			RT.	7.3
			TOTAL	7955.1
			USE	7956

PERIMETER EROSION BARRIER

STATION	OFFSET	TO	STATION	OFFSET	LENGTH FOOT
E. BROADWAY ST.					
16+67.2	70.0' LT.	TO	17+25.0	42.0' LT.	64.3
23+61.0	32.6' LT.	TO	27+42.6	32.9' LT.	381.6
27+42.6	32.9' LT.	TO	27+63.8	76.9' LT.	48.3
27+91.7	78.5' LT.	TO	28+08.6	34.3' LT.	47.4
28+08.6	34.3' LT.	TO	29+00.0	33.4' RT.	91.4
16+65.0	60.0' RT.	TO	17+25.0	60.0' RT.	60.0
23+61.0	32.6' LT.	TO	23+61.0	37.4' RT.	70.0
23+61.0	37.4' RT.	TO	26+05.0	37.2' RT.	244.0
26+25.0	37.2' RT.	TO	27+20.0	37.2' RT.	95.0
27+20.0	37.2' RT.	TO	27+62.8	78.4' RT.	59.0
				TOTAL	1161.0
				USE	1161

AGGREGATE SHOULDERS, TYPE B, 6"

STATION	TO	STATION	SQ YD
INTERSECTION OF E. BROADWAY ST. AND IOWA ST.			
N.E. QUADRANT			31.4
N.W. QUADRANT			6.0
S.E. QUADRANT			27.6
		TOTAL	65.0
		USE	65

FILTER FABRIC - INLET PROTECTION

STATION	OFFSET	EACH
E. BROADWAY ST.		
15+05.0	15.4' LT.	1
15+45.0	15.2' LT.	1
15+65.0	15.3' LT.	1
17+10.0	15.0' LT.	1
19+60.0	15.0' LT.	1
23+75.0	15.0' LT.	1
26+25.0	15.0' LT.	1
27+42.0	20.4' LT.	1
15+05.0	14.9' RT.	1
15+45.0	14.9' RT.	1
15+65.0	15.0' RT.	1
17+10.0	15.8' RT.	1
19+60.0	15.8' RT.	1
23+75.0	15.8' RT.	1
26+25.0	15.8' RT.	1
27+42.0	20.4' RT.	1
27+62.8	74.8' RT.	1
SHABBONA ST.		
68+50.0	13.0' LT.	1
68+80.0	13.0' LT.	1
69+25.0	13.0' LT.	1
70+75.0	13.0' LT.	1
71+25.0	13.0' LT.	1
68+50.0	12.0' RT.	1
68+80.0	12.0' RT.	1
69+25.0	16.2' RT.	1
69+59.9	15.6' RT.	1
70+75.0	20.6' RT.	1
71+25.0	13.0' RT.	1
N.W. FRONTAGE RD.		
18+60.0	35.1' LT.	1
19+30.0	35.1' LT.	1
19+60.0	35.1' LT.	1
S.W. FRONTAGE RD.		
18+75.0	42.6' RT.	1
19+45.0	42.6' RT.	1
19+60.0	43.6' RT.	1
19+75.0	47.3' RT.	1
ILLINOIS ST.		
88+20.0	15.0' LT.	1
91+20.0	15.0' LT.	1
91+70.0	15.0' LT.	1
88+20.0	13.8' RT.	1
91+20.0	23.0' RT.	1
91+70.0	23.0' RT.	1
91+85.0	23.0' RT.	1
IOWA ST.		
109+25.0	11.0' LT.	1
	TOTAL	43
	USE	43

ENTRANCES

LOCATION	SIDE	TYPE	AGGREGATE SURFACE COURSE, TYPE B TEMPORARY ACCESS TON	PORTLAND CEMENT CONCRETE DRIVEWAY PAVEMENT, 6" SQ YD	PORTLAND CEMENT CONCRETE DRIVEWAY PAVEMENT, 8" SQ YD
E. BROADWAY ST.					
28+65.2	RT.	P.E.	10.0	36.0	
SHABBONA ST.					
68+57.3	RT.	P.E.	10.0	46.1	
71+48.0	RT.	P.E.	10.0	29.5	
71+81.5	LT.	P.E.	10.0	39.2	
N.W. FRONTAGE RD.					
17+67.4	LT.	P.E.	5.0	22.6	
18+53.8	LT.	STAGE 2	12.0		
18+88.6	LT.	C.E.	10.0		32.7
S.W. FRONTAGE RD.					
17+60.6	RT.	P.E.	10.0	29.3	
18+09.3	RT.	P.E.	10.0	28.7	
18+22.1	RT.	P.E.	10.0	27.8	
18+56.3	RT.	STAGE 2	50.0		
19+00.8	RT.	P.E.	10.0	30.6	
ILLINOIS ST.					
88+34.9	LT.	P.E.	10.0	74.1	
91+42.2	LT.	C.E.	5.0		105.8
91+92.9	LT.	ALLEY			39.6
ACCESS FROM IOWA ST. BY EXTENDING KENT ST. TO SB WAREHOUSING, INC. TRACKS AND MAINTAINING ACCESS BETWEEN TRACKS TO BRIDGE SITE			200.0		
		TOTAL	372.0	363.9	178.1
		USE	372	364	179

SANITARY MANHOLES TO BE RECONSTRUCTED

STATION	OFFSET	EACH
E. BROADWAY ST.		
27+46.6	2.1' RT.	1
27+66.5	20.6' RT.	1
SHABBONA ST.		
68+61.5	7.1' LT.	1
ILLINOIS ST.		
90+63.1	22.6' LT.	1
	TOTAL	4
	USE	4

INLET AND PIPE PROTECTION

STATION	OFFSET	EACH
E. BROADWAY ST.		
26+15.5	110.5' RT.	1
28+00.0	51.9' RT.	1
28+01.0	27.0' RT.	1
28+87.5	25.0' RT.	1
ILLINOIS ST.		
88+55.0	25.0' LT.	1
	TOTAL	5
	USE	5

F.A.U. RTE.	SECTION	COUNTY	TOTAL SHEETS	SHEET NO.
6145	01-00590-00-BR	LaSALLE	168	16
STA. N/A	TO STA. N/A			
FED. ROAD DIST. NO. 3	ILLINOIS	FEDERAL AID PROJECT		

CONTRACT NO. 87293

EPOXY PAVEMENT MARKING

STATION	TO	STATION	LANE LINE		PARKING LINE	CROSSWALK LINES	STOP BARS
			SKIP DASH - YELLOW - 4"	SOLID - YELLOW - 4" (DOUBLE)	SOLID - WHITE - 4"	SOLID - WHITE - 6"	WHITE - 24"
			FOOT				
E. BROADWAY ST.							
15+20.0	TO	16+27.0				78.1	
16+27.0	TO	27+34.9		2145.0		82.5	
27+34.9	TO	29+00.0				92.1	
SHABBONA ST.							
68+12.6	TO	70+00.0	40.0			77.2	16.0
70+00.0	TO	72+21.9	50.0			82.0	15.00
N.W. FRONTAGE RD.							
16+52.0	TO	19+97.1				111.5	14.1
S.W. FRONTAGE RD.							
16+52.40	TO	19+96.1				101.0	24.8
ILLINOIS ST.							
87+87.9	TO	92+75.9	130.0		294.00		
IOWA ST.							
108+97.1	TO	110+00.0				78.12	13.4
110+00.0	TO	111+03.4				73.90	13.0
		TOTAL	220.0	2145.0	294.0	776.4	96.3
		USE		2659		777	97

SANITARY SEWER REMOVAL, 24"

STATION	OFFSET	TO	STATION	OFFSET	SANITARY SEWER REMOVAL	TRENCH BACKFILL
					FOOT	CU YD
E. BROADWAY ST.						
89+30.0	27.7' LT.		90+63.2	22.6' LT.	127.0	247.8
				TOTAL	127.0	247.8
				USE	127	248

PORTLAND CEMENT CONCRETE SIDEWALK, 4"

STATION	TO	STATION	SIDE	SIDEWALK	DETECTABLE WARNINGS
				SQ FT	
E. BROADWAY ST.					
1588.24	TO	1608.14	LT.	146.2	12
1645.01	TO	1663.18	LT.	193.1	12
1990.58	TO	1995.58	LT.	62.7	6
2795.69	TO	2809.23	LT.	109.5	12
1588.55	TO	1593.53	RT.	60.2	6
1593.53	TO	1605.03	RT.	52.3	6
1642.16	TO	1662.58	RT.	0	12
1990.58	TO	1995.58	RT.	101.5	6
2742.95	TO	2754.14	RT.	0	6
2791.15	TO	2859.16	RT.	492.91	12
2871.16	TO	2900	RT.	144.2	0
N.W. FRONTAGE RD.					
1658.2	TO	1758.93	LT.	547.3	6
1775.93	TO	1880.05	LT.	500.5	0
1897.05	TO	1992.86	LT.	591.2	6
S.W. FRONTAGE RD.					
1657.71	TO	1753.38	RT.	550.2	6
1767.74	TO	1801.04	RT.	154.9	0
1831.14	TO	1893.81	RT.	329.4	0
1907.81	TO	1973.77	RT.	396.9	0
1973.77	TO	1992.11	RT.	85.6	6
			TOTAL	4518.61	114
			USE	4519	114

BY OTHERS
FIRE HYDRANTS TO BE MOVED

STATION	OFFSET	EACH
E. BROADWAY ST.		
16+51.4	49.9' RT.	1
19+75.0	42.2' RT.	1
	TOTAL	2
	USE	2

INLETS TO BE ADJUSTED

STATION	OFFSET	EACH
ILLINOIS ST.		
91+74.6	24.5' LT.	1
	TOTAL	1.0
	USE	1

BY OTHERS
WATER VALVES TO BE ADJUSTED

STATION	OFFSET	SIDE	EACH
E. BROADWAY ST.			
18+77.4	38.9'	RT.	1
19+75.6	37.1'	RT.	1
SHABBONA ST.			
69+65.3	15.7'	RT.	1
IOWA ST.			
109+63.2	7.2'	RT.	1
		TOTAL	4
		USE	4

CONCRETE MEDIAN SURFACE, 6"

STATION	TO	STATION	SIDE	CONCRETE MEDIAN
				SQ FT
E. BROADWAY ST.				
16+55.13	TO	19+85.75	LT.	1008.2
16+66.07	TO	19+85.75	RT.	612.1
19+85.75	TO	19+98.08	LT. & RT.	413.4
			TOTAL	2033.7
			USE	2034

STORM SEWER, MANHOLE AND INLET REMOVAL

STATION	OFFSET	TO	STATION	OFFSET	STORM SEWER REMOVAL	REMOVING MANHOLES	REMOVING INLETS	TRENCH BACKFILL
					FOOT	EACH	EACH	CU YD
E. BROADWAY ST.								
16+05.8	20.0' RT.						1	
16+05.8	20.0' RT.	TO	16+25.8	0.8' LT.	28.5			14
16+06.5	20.7' LT.						1	
16+06.5	20.7' LT.	TO	16+25.8	0.8' LT.	27.0			13
16+25.8	0.8' LT.					1		
26+15.5	32.0' RT.	TO	26+15.5	110.5' RT.	78.5			
28+06.5	39.2' RT.						1	
ILLINOIS ST.								
84+44.1	31.2' RT.	TO	84+64.6	19.0' RT.	14.8			
89+61.6	33.5' LT.						1	
90+42.1	31.3' LT.						1	
90+42.1	31.3' LT.	TO	90+63.1	22.6' LT.	22.5			12
91+35.9	14.2' LT.	TO	91+72.7	12.8' LT.	36.0			4
91+72.7	12.8' LT.						1	
91+74.6	24.5' LT.	TO	91+77.0	11.3' RT.	35.2			1
91+77.0	11.3' RT.						1	
				TOTAL	242.5	1.0	7.0	44.0
				USE	243	1	7	44

SANITARY SEWER, TYPE 2, 24"

STATION	OFFSET	TYPE	SANITARY SEWER, TYPE 2, 24"	MANHOLES, 5' DIA., TYPE 1 FRAME, CLID	TRENCH BACKFILL
			FOOT	EACH	CU YD
ILLINOIS ST.					
89+30.00	27.65' LT.	MANHOLE		1	
		SANITARY SEWER	36		51
89+58.00	C.L.	MANHOLE		1	
		SANITARY SEWER	72		111
90+34.00	C.L.	MANHOLE		1	
		SANITARY SEWER	32		43
90+63.15	22.60' LT.	EXISTING MANHOLE			
		TOTAL	140.0	3.0	205.0
		USE	140	3	205

COMBINATION CONCRETE CURB AND GUTTER

LOCATION			SIDE	TYPE B-6.12	TYPE B-6.24	TYPE B GUTTER
STATION	TO	STATION		FOOT		
E. BROADWAY ST.						
14+95.00	TO	15+56.90	LT.	61.9		
14+95.00	TO	15+73.45	RT.	78.5		
INTERSECTION E. BROADWAY ST. AND SHABBONA ST.						
N.W. QUADRANT				79.9		
S.W. QUADRANT				81.7		
N.E. QUADRANT				52.6		
S.E. QUADRANT				66.5		
SHABBONA ST.						
68+37.58	TO	69+23.13	LT.	85.6		
70+56.42	TO	71+96.93	LT.	140.5		
68+37.58	TO	69+04.14	RT.	66.6		
71+22.29	TO	71+96.93	RT.	74.6		
N.W. FRONTAGE RD.						
71+22.29	TO	17+26.79	LT.	140.9		
17+26.79	TO	19+62.57	LT.	235.8		
17+26.49	TO	19+79.59	LT.	253.1		
16+46.48	TO	17+26.49	LT.	86.7		
S.W. FRONTAGE RD.						
16+43.64	TO	16+87.25	RT.	47.6		
16+87.25	TO	19+79.82	RT.	292.6		
16+91.71	TO	19+53.53	RT.	261.8		
69+04.14	TO	16+91.71	RT.	84.2		
INTERSECTION OF ILLINOIS ST. AND S.W. FRONTAGE RD.						
S.W. QUADRANT					79.1	
N.W. QUADRANT				38.1		
INTERSECTION OF ILLINOIS ST. AND N.W. FRONTAGE RD.						
S.W. QUADRANT				29.2		
N.W. QUADRANT					72.6	
ILLINOIS ST.						
88+12.88	TO	88+99.11	LT.		86.2	
90+86.68	TO	91+10.83	LT.		24.1	
91+10.83	TO	91+14.79	LT.		9.0	
91+14.79	TO	92+25.17	LT.		110.4	
92+25.17	TO	92+29.36	LT.		9.1	
92+29.36	TO	92+50.90	LT.		21.5	
88+12.88	TO	90+60.64	RT.			247.8
90+60.64	TO	90+71.63	RT.			13.7
90+71.63	TO	92+41.13	RT.			169.5
92+41.13	TO	92+50.90	RT.			13.2
INTERSECTION OF E. BROADWAY ST. AND IOWA ST.						
S.W. QUADRANT				82.4		
N.W. QUADRANT				72.4		
			TOTAL	2413.2	412.0	444.2
			USE	2414	412	445

F.A.U. RTE.	SECTION	COUNTY	TOTAL SHEETS	SHEET NO.
6145	01-00590-00-BR	LaSALLE	168	17
STA. N/A	TO STA. N/A			
FED. ROAD DIST. NO. 3	ILLINOIS	FEDERAL AID PROJECT		

CONTRACT NO. 87293

STORM SEWER

STATION	OFFSET	TYPE	STORM SEWERS						MANHOLES						INLETS									DRAINAGE STRUCTURES TYPE 1		TRENCH BACKFILL
			RUBBER GASKET, CLASS A					PVC (WATER MAIN QUALITY)	TYPE A, 4' DIA.			TYPE A, 5' DIA.	TYPE A, 6' DIA.		TYPE A, 2' DIA.			TYPE B, 3' DIA.								
			TYPE 1		TYPE 2			TYPE 2, SPECIAL	TYPE 1 FRAME CLID	TYPE 10 F & G	TYPE 11 F & G	TYPE 1 FRAME CLID	TYPE 1 FRAME CLID	W/2 - TYPE 1 FRAMES CLID RESTRICTOR PLATE	TYPE 1 FRAME OLID	TYPE 3 F & G	TYPE 10 F & G	TYPE 11 F & G	TYPE 1 FRAME OLID	TYPE 1 FRAME CLID	TYPE 3 F & G	TYPE 10 F & G	TYPE 11 F & G	W/1 - TYPE 20 F & G	W/2 - TYPE 20 F & G	
			12"	48"	12"	18"	24"	12"																		
			FOOT						EACH						EACH									EACH		CU YD
E. BROADWAY ST. (WEST OF BRIDGE)																										
15+05.00	15.57 LT.	INLET															1									
		SS			38																					9
15+45.00	15.15 LT.	INLET																				1				
		SS			18																					5
15+65.00	15.33 LT.	INLET																				1				
		SS			12																					4
15+65.00	C.L.	MANHOLE							1																	
		SS			58																					40
16+25.82	0.75 LT.	MANHOLE							1																	
15+05.00	14.79 RT.	INLET															1									
		SS			38																					9
15+45.00	14.92 RT.	INLET																				1				
		SS			18																					5
15+65.00	14.98 RT.	INLET																				1				
		SS			12																					4
		SS			82																					22
17+10.00	C.L.	MANHOLE							1																	
17+10.00	15.00 LT.	DR. STR.																						1		
		SS						10																		
17+10.00	15.79 RT.	DR. STR.																							1	
		SS						12																		
		SS						246																		
19+60.00	C.L.	MANHOLE							1																	
19+60.00	15.00 LT.	DR. STR.																						1		
		SS						10																		
19+60.00	15.79 RT.	DR. STR.																							1	
		SS						12																		
SHABBONA ST.																										
68+50.00	13.00 LT.	INLET															1									
		SS			12																					3
68+50.00	0.49 RT.	MANHOLE							1																	
		SS			10																					2
68+50.00	12.00 RT.	INLET														1										
68+80.00	13.00 LT.	INLET															1									
		SS			12																					3
68+80.00	0.16 RT.	MANHOLE							1																	
		SS			10																					2
68+80.00	12.00 RT.	INLET															1									
69+25.00	13.02 LT.	INLET															1									
		SS			10																					3
69+25.00	0.35 LT.	MANHOLE							1																	
		SS			14																					4
69+25.00	16.20 RT.	INLET																				1				
		SS			34																					9
69+59.93	15.60 RT.	INLET															1									
70+75.00	13.00 LT.	INLET															1									
		SS			10																					2
70+75.00	1.07 LT.	MANHOLE							1																	
		SS			20																					5
70+75.00	20.59 RT.	INLET															1									
71+50.00	13.00 LT.	INLET															1									
		SS			24																					7
71+25.00	13.00 LT.	INLET																				1				
		SS			10																					3
71+25.00	1.00 LT.	MANHOLE							1																	
		SS			12																					3
71+25.00	13.00 RT.	INLET															1									

STORM SEWER SCHEDULE CONTINUED ON NEXT SHEET

F.A.U. RTE.	SECTION	COUNTY	TOTAL SHEETS	SHEET NO.
6145	01-00590-00-BR	LaSALLE	168	18
STA. N/A		TO STA. N/A		
FED. ROAD DIST. NO. 3	ILLINOIS	FEDERAL AID PROJECT		

CONTRACT NO. 87293

STORM SEWER

STATION	OFFSET	TYPE	STORM SEWERS						MANHOLES						INLETS									DRAINAGE STRUCTURES TYPE 1		TRENCH BACKFILL
			RUBBER GASKET, CLASS A					PVC (WATER MAIN QUALITY)	TYPE A, 4' DIA.			TYPE A, 5' DIA.	TYPE A, 6' DIA.		TYPE A, 2' DIA.				TYPE B, 3' DIA.					W/1 - TYPE 20 F & G	W/2 - TYPE 20 F & G	
			TYPE 1		TYPE 2			TYPE 2, SPECIAL	TYPE 1 FRAME CLID	TYPE 10 F & G	TYPE 11 F & G	TYPE 1 FRAME CLID	TYPE 1 FRAME CLID	W/2 - TYPE 1 FRAMES CLID RESTRICTOR PLATE	TYPE 1 FRAME OLID	TYPE 3 F & G	TYPE 10 F & G	TYPE 11 F & G	TYPE 1 FRAME OLID	TYPE 1 FRAME CLID	TYPE 3 F & G	TYPE 10 F & G	TYPE 11 F & G			
			12"	48"	12"	18"	24"	12"	EACH						EACH									EACH		CU YD
N.W. FRONTAGE RD.																										
18+60.00	35.08 LT.	INLET																1								
		SS			10																					3
18+70.00	38.58 LT.	INLET																		1						
		SS			92.00																					34
19+65.00	38.58 LT.	MANHOLE							1																	
		SS			68																					27
19+30.00	35.08 LT.	INLET																1								
		SS	14																							3
19+45.00	35.08 LT.	INLET																					1			
		SS	12																							3
19+60.00	35.08 LT.	INLET																					1			
		SS			4																					1
S.W. FRONTAGE RD.																										
18+75.00	42.58 RT.	INLET																1								
		SS			14.00																					4
18+90.00	46.08 RT.	INLET																		1						
		SS			58.00																					34
19+50.00	46.08 RT.	MANHOLE							1																	
		SS			24																					14
19+45.00	42.58 LT.	INLET																1								
		SS			4																					1
19+75.00	56.54 LT.	MANHOLE							1																	
		SS			56																					31
19+60.00	43.61 RT.	INLET														1										
		SS			14																					4
19+75.00	47.34 RT.	INLET																			1					
		SS			6																					3
ILLINOIS ST.																										
84+44.06	31.17 RT.	EXIST. M.H.																								
		SS					10.00																			
84+52.50	19.00 RT.	MANHOLE										1														
		SS					8.00																			
84+64.56	19.00 RT.	MANHOLE											1													
		SS		340.00																						
88+10.00	19.00 RT.	MANHOLE												1												
		SS			8.00																					
88+20.00	13.75 RT.	MANHOLE								1																
		SS			26.00																					7
88+20.00	15.00 LT.	INLET																			1					
		SS	34.00																							7
88+55.00	25.00 LT.	INLET													1											
		SS					76.0																			
88+90.00	19.00 RT.	MANHOLE										1														
		SS			8.0																					
89+00.00	13.75 RT.	INLET															1									
		SS					46.0																			
89+40.00	19.00 RT.	MANHOLE										1														
		SS				98.0																				
90+40.00	23.50 RT.	MANHOLE							1																	
91+08.00	23.00 LT.	INLET														1										
		SS	12.0																							2

STORM SEWER SCHEDULE CONTINUED ON NEXT SHEET

F.A.U. RTE.	SECTION	COUNTY	TOTAL SHEETS	SHEET NO.
6145	01-00590-00-BR	LaSALLE	168	19
STA. N/A	TO STA. N/A			
FED. ROAD DIST. NO. 3	ILLINOIS	FEDERAL AID PROJECT		

CONTRACT NO. 87293

STORM SEWER

STATION	OFFSET	TYPE	STORM SEWERS						MANHOLES						INLETS									DRAINAGE STRUCTURES TYPE 1		TRENCH BACKFILL
			RUBBER GASKET, CLASS A					PVC (WATER MAIN QUALITY)	TYPE A, 4' DIA.			TYPE A, 5' DIA.	TYPE A, 6' DIA.		TYPE A, 2' DIA.			TYPE B, 3' DIA.						W/1 - TYPE 20 F & G	W/2 - TYPE 20 F & G	
			TYPE 1		TYPE 2			TYPE 2, SPECIAL	TYPE 1 FRAME CLID	TYPE 10 F & G	TYPE 11 F & G	TYPE 1 FRAME CLID	TYPE 1 FRAME CLID	W/2 - TYPE 1 FRAMES CLID RESTRICTOR PLATE	TYPE 1 FRAME OLID	TYPE 3 F & G	TYPE 10 F & G	TYPE 11 F & G	TYPE 1 FRAME OLID	TYPE 1 FRAME CLID	TYPE 3 F & G	TYPE 10 F & G	TYPE 11 F & G			
			12"	48"	12"	18"	24"	12"																		
			FOOT						EACH						EACH									EACH		CU YD
91+20.00	23.00 RT.	INLET															1									
		SS	36.0																							7
91+20.00	15.00 LT.	MANHOLE								1																
		SS	48.0																							10
91+85.00	23.00 RT.	INLET															1									
		SS	14.0																							2
91+70.00	23.00 RT.	INLET																			1					
		SS	36.0																							7
91+85.00	15.00 LT.	INLET															1									
		SS	14.0																							3
91+70.00	15.00 LT.	MANHOLE								1																
		SS	8.0																							2
91+74.63	24.53 LT.	EXISTING																								
E. BROADWAY ST. (EAST OF BRIDGE, INCLUDING IOWA ST.)																										
23+75.00	15.00 LT.	DR. STR.																						1		
		SS						10.0																		
23+75.00	15.79 RT.	DR. STR.																							1	
		SS						12.0																		
23+75.00	C.L.	MANHOLE							1																	
		SS						246.0																		
26+25.00	15.00 LT.	DR. STR.																						1		
		SS						10.0																		
26+25.00	15.79 RT.	DR. STR.																							1	
		SS						12.0																		
26+25.00	C.L.	MANHOLE							1																	
		SS						114.0																		
27+42.00	20.36 LT.	INLET																1								
		SS			18.0																					5
27+42.00	C.L.	MANHOLE							1																	
		SS			18.0																					5
27+42.00	20.40 RT.	MANHOLE									1															
		SS			22.0																					6
28+87.50	25.00 RT.	INLET													1											
		SS			84.0																					13
28+01.04	27.00 RT.	INLET																		1						
		SS			22.0																					7
28+00.00	51.94 RT.	INLET																	1							
		SS			42.0																					24
27+62.79	74.83 RT.	INLET																					1			
		SS			58.0																					
27+20.00	32.00 RT.	MANHOLE							1																	
		SS			102.0																					
26+15.50	32.00 RT.	MANHOLE							1																	
		SS			76.0																					
24+00.00	32.00 RT.	INLET																		1						
		SS			212.0																					
		TOTAL	228.0	340.0	1500.0	98.0	140.0	694.0	18.0	3.0	1.0	3.0	1.0	1.0	2.0	2.0	5.0	16.0	1.0	4.0	2.0	1.0	9.0	4.0	4.0	413.0
		USE	228	340	1500	98	140	694	18	3	1	3	1	1	2	2	5	16	1	4	2	1	9	4	4	413

F.A.U. RTE.	SECTION	COUNTY	TOTAL SHEETS	SHEET NO.
6145	01-00590-00-BR	LaSALLE	168	20
STA. N/A	TO STA. N/A			
FED. ROAD DIST. NO. 3	ILLINOIS	FEDERAL AID PROJECT		

CONTRACT NO. 87293

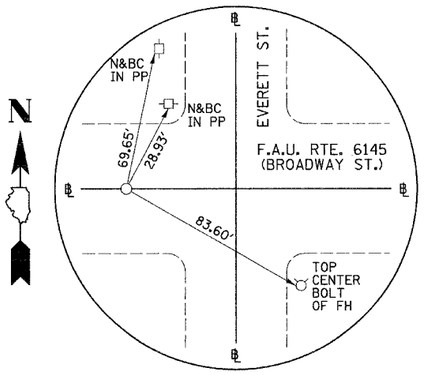

P.O.T. #22 STA. 12+06.45
F.A.U. RTE. 6145 (BROADWAY ST.)
(P.K. NAIL)

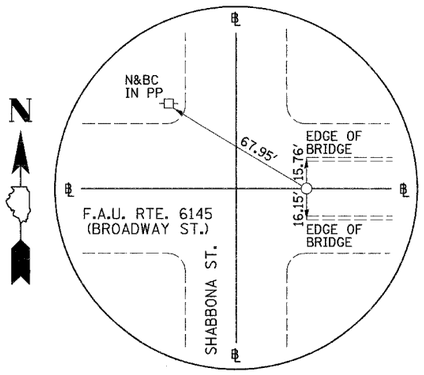

P.O.T. #23 STA. 16+65.73
F.A.U. RTE. 6145 (BROADWAY ST.)
(P.K. NAIL)

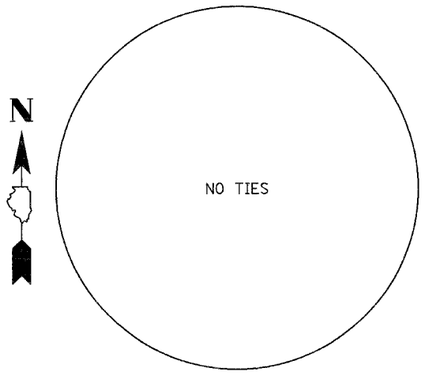

P.O.T. #24 STA. 23+50.30
F.A.U. RTE. 6145 (BROADWAY ST.)
(P.K. NAIL)

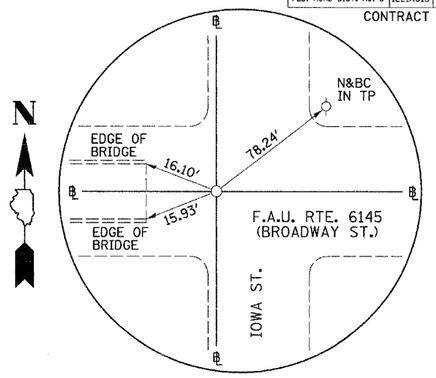

P.I. #25 STA. 27+39.80
F.A.U. RTE. 6145 (BROADWAY ST.)
(P.K. NAIL)

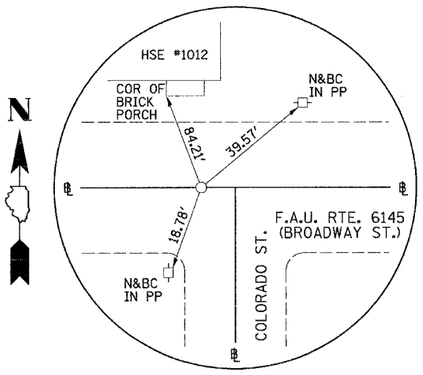

P.O.T. #26 P.I. STA. 31+16.90
F.A.U. RTE. 6145 (BROADWAY ST.)
(P.K. NAIL)

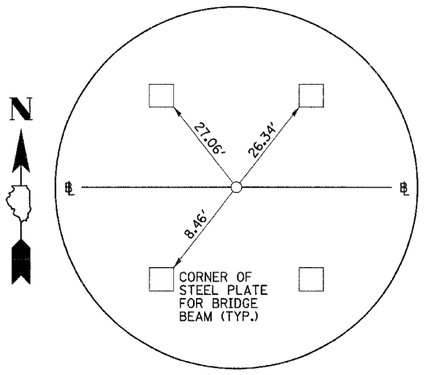

P.O.T. #28 STA. 18+49.93
UNDER BRIDGE
(I-ROD)

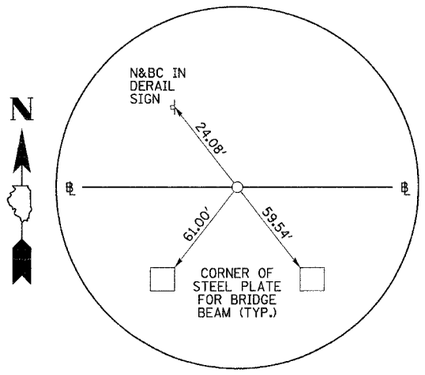

P.O.T. #29 STA. 21+00.85
UNDER BRIDGE
(I-ROD)

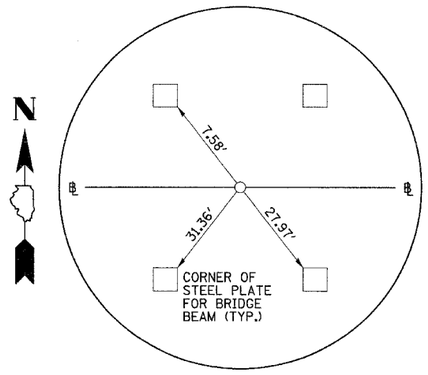

P.O.T. #30 STA. 23+82.81
UNDER BRIDGE
(I-ROD)

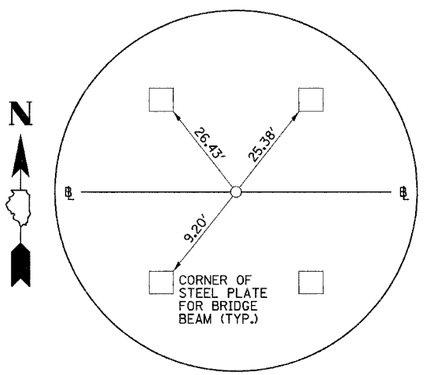

P.O.T. #31 STA. 25+09.69
UNDER BRIDGE
(I-ROD)

F.A.U. RTE.	SECTION	COUNTY	TOTAL SHEETS	SHEET NO.
6145	01-00590-00-BR	LaSALLE	168	21
STA. N/A	TO STA. N/A			
FED. ROAD DIST. NO. 3	ILLINOIS	FEDERAL AID PROJECT		

CONTRACT NO. 87293

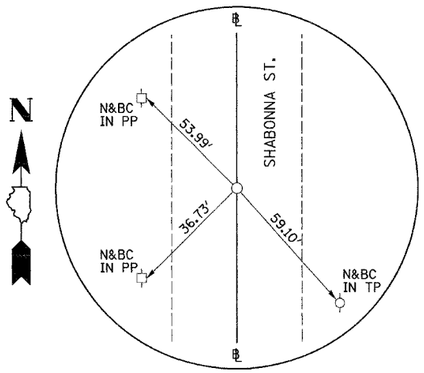

P.O.T. #35 STA. 65+87.34
SHABONNA ST.
(P.K. NAIL)

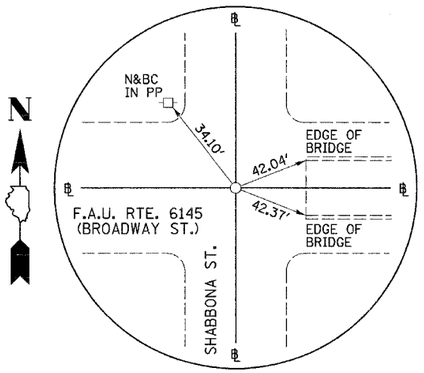

P.O.T. #36 STA. 70+00.00
SHABONNA ST.
(P.K. NAIL)

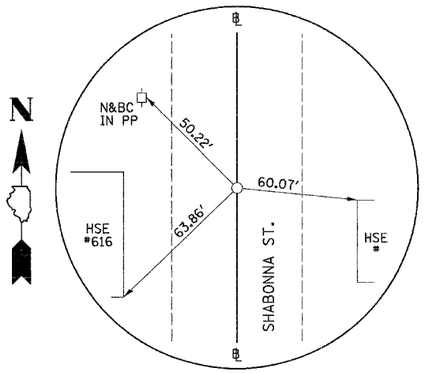

P.O.T. #37 STA. 74+89.18
SHABONNA ST.
(P.K. NAIL)

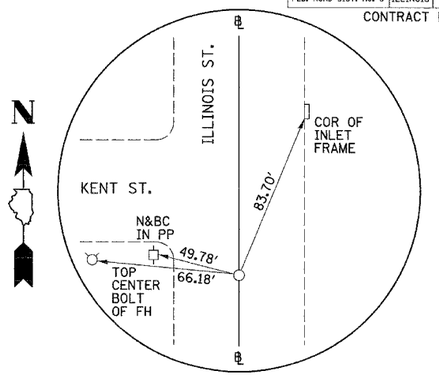

P.O.T. #38 STA. 83+93.34
ILLINOIS ST.
(P.K. NAIL)

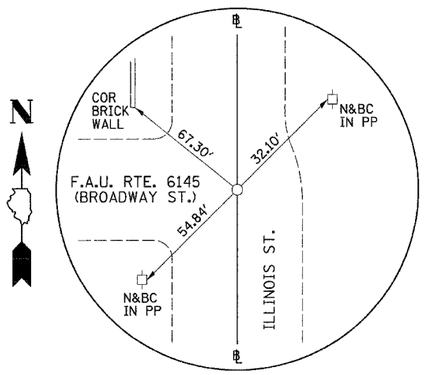

P.I. #39 STA. 90+00.00
ILLINOIS ST.
(P.K. NAIL)

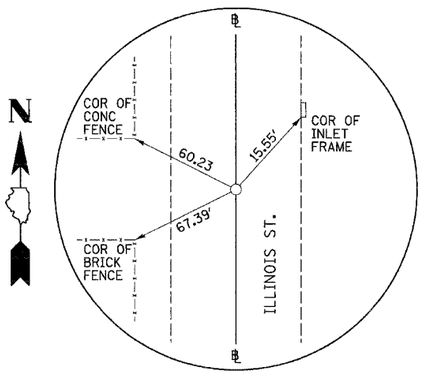

P.I. #40 STA. 91+67.00
ILLINOIS ST.
(P.K. NAIL)

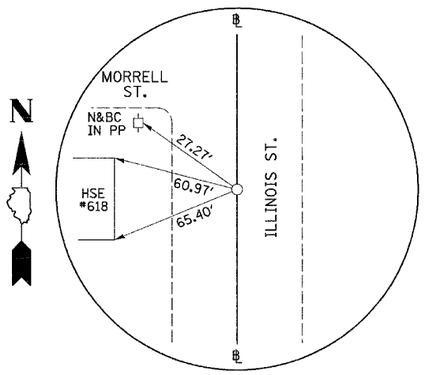

P.O.T. #41 STA. 95+12.96
ILLINOIS ST.
(P.K. NAIL)

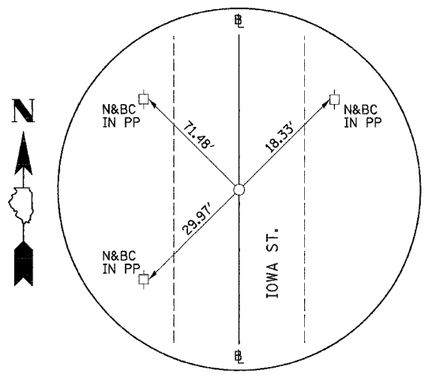

P.O.T. #42 STA. 106+77.84
IOWA ST.
(P.K. NAIL)

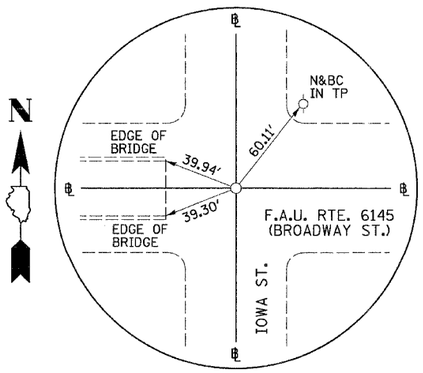

P.O.T. #43 STA. 110+00.00
IOWA ST.
(P.K. NAIL)

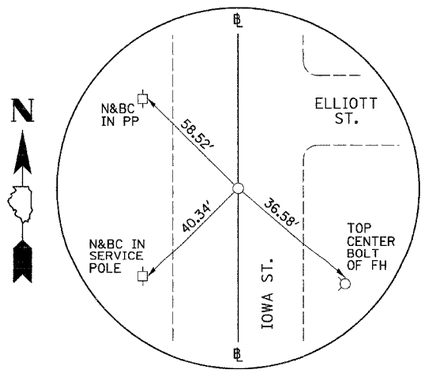

P.O.T. #44 STA. 113+16.04
IOWA ST.
(P.K. NAIL)

F.A.U. RTE.	SECTION	COUNTY	TOTAL SHEETS	SHEET NO.
6145	01-00590-00-BR	LaSALLE	168	22
STA. 11+00	TO STA. 17+00			
FED. ROAD DIST. NO. 3	ILLINOIS	FEDERAL AID PROJECT		

CONTRACT NO. 87293

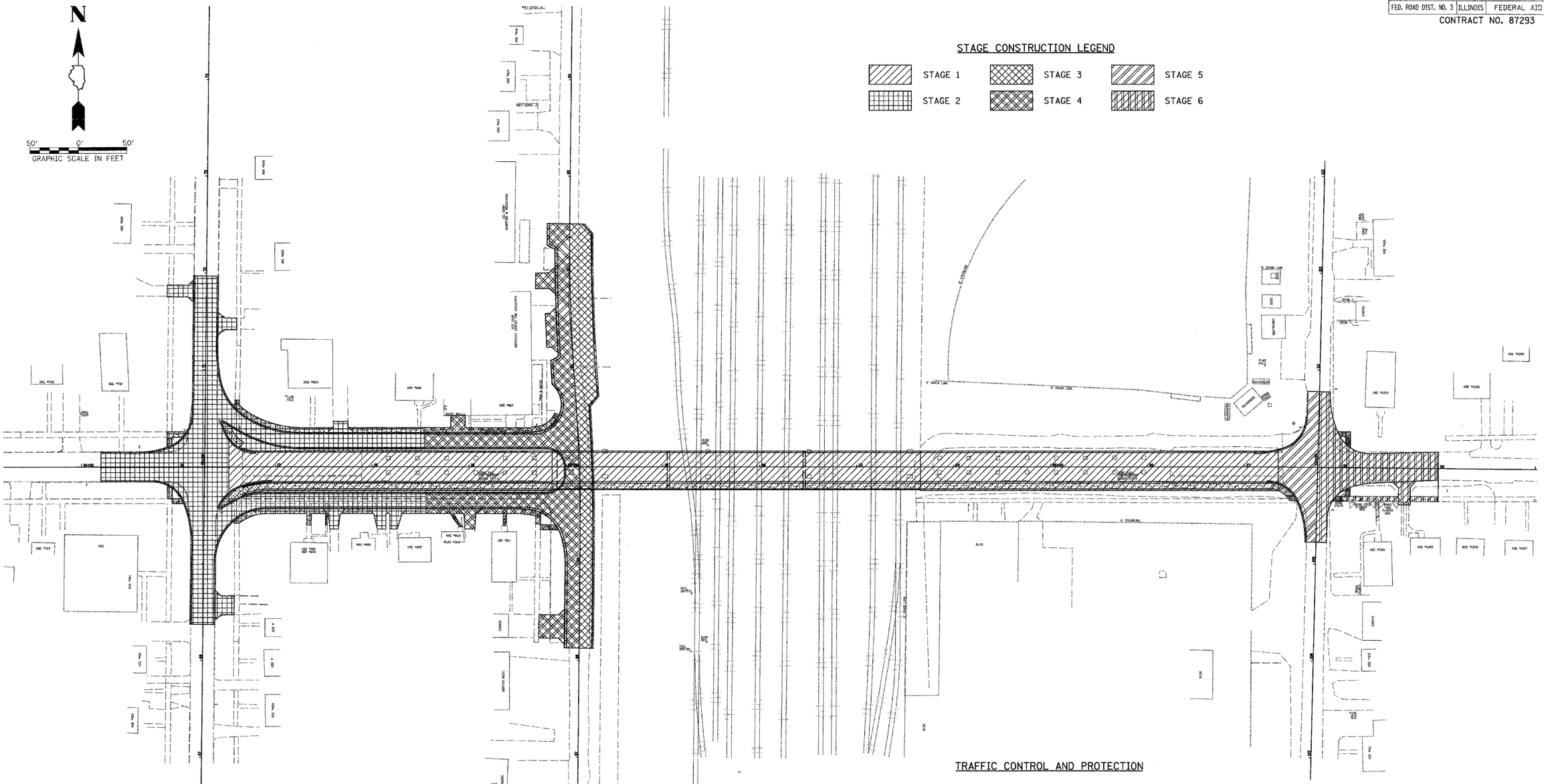

TRAFFIC CONTROL AND PROTECTION

A.) TRAFFIC CONTROL AND PROTECTION SHALL BE PERFORMED IN ACCORDANCE WITH THE TRAFFIC CONTROL PLAN AND SECTION 701 OF THE STANDARD SPECIFICATIONS AS AMENDED BY THE SPECIAL PROVISION FOR CONSTRUCTION ZONE TRAFFIC CONTROL LRS-3.

B.) EXISTING TRAFFIC CONTROL SIGNS AND DEVICES WILL BE REMOVED BY THE CONTRACTOR AFTER THE PROPOSED TRAFFIC CONTROL REQUIREMENTS ARE MET OR AS AUTHORIZED BY THE ENGINEER, ANY SIGNS OR DEVICES LEFT IN PLACE AT THIS TIME ARE TO BE PROTECTED FROM DAMAGE BY THE CONTRACTOR AND ANY DAMAGE CAUSED BY THIS WORK WILL BE PAID FOR BY THE CONTRACTOR.

C.) TYPE I OR TYPE II BARRICADES WITH TWO WAY FLASHING LIGHTS SHALL BE REQUIRED AT ALL OPEN TRENCHES, EXCAVATIONS, OPEN OR EXPOSED SEWER STRUCTURES, TRANSVERSE PAVEMENT JOINTS, MATERIALS OR EQUIPMENT WITHIN THE RIGHT OF WAY (NUMBERING AND SPACING DEPENDS ON THE CONDITIONS), AND AT LOCATIONS DESIGNATED BY THE ENGINEER OR LOCAL LAW ENFORCEMENT AGENCIES.

D.) TYPE III BARRICADES WITH TWO-WAY FLASHING LIGHTS WILL BE REQUIRED TO GUIDE TRAFFIC AWAY FROM PAVEMENT AREAS CLOSED FOR CONSTRUCTION.

E.) TRAFFIC SIGNS SHALL BE RELOCATED FOR EACH STAGE OF CONSTRUCTION, WHERE REQUIRED.

F.A.U. RTE.	SECTION	COUNTY	TOTAL SHEETS	SHEET NO.
6145	01-00590-00-BR	LaSALLE	168	23
STA. N/A	TO STA. N/A			
FED. ROAD DIST. NO. 3	ILLINOIS	FEDERAL AID PROJECT		

CONTRACT NO. 87293

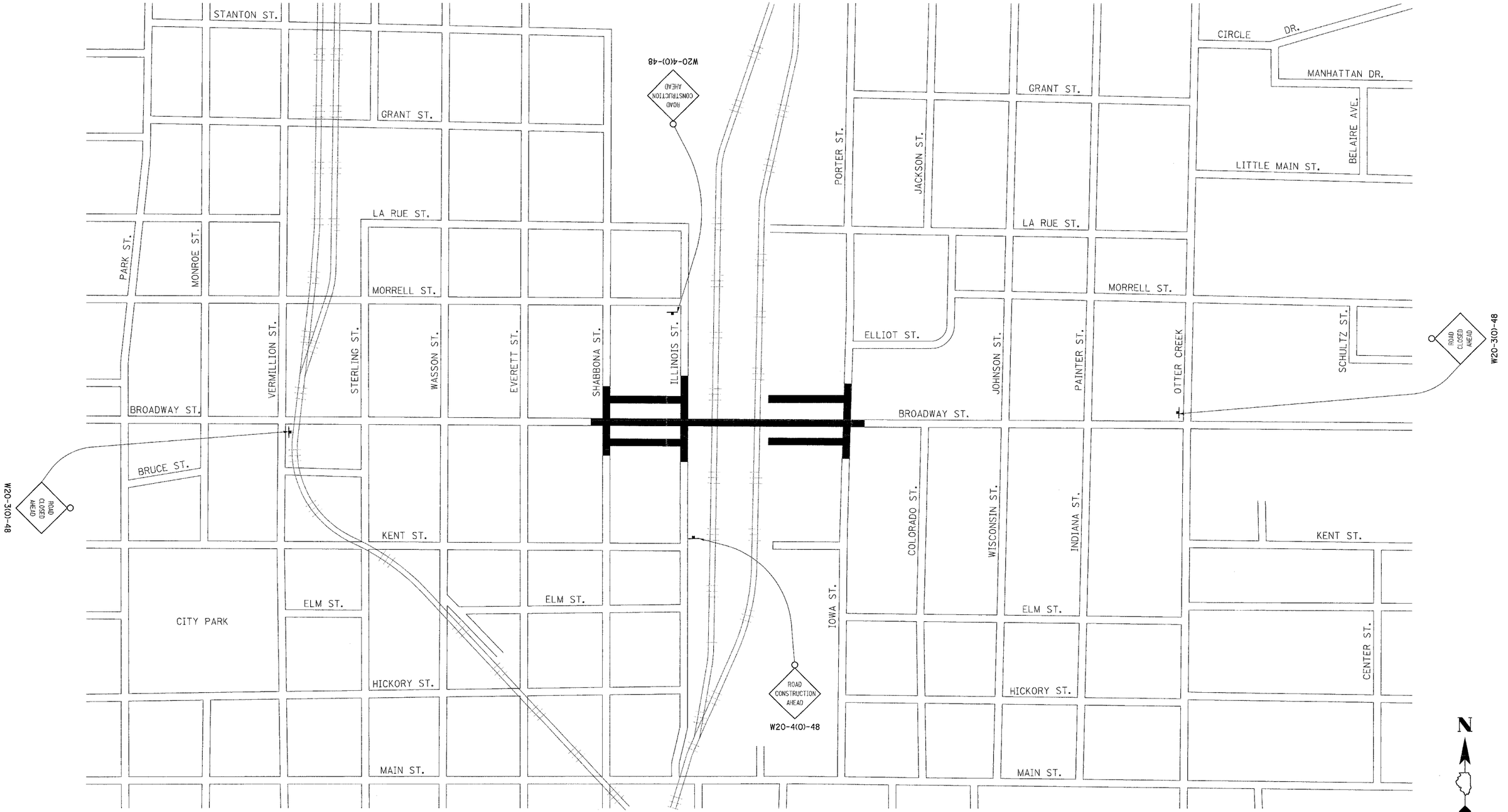

2190F000A

F.A.U. RTE. 6145 (BROADWAY ST.), ROAD CLOSED AHEAD SIGN LOCATIONS

F.A.U. RTE.	SECTION	COUNTY	TOTAL SHEETS	SHEET NO.
6145	01-00590-00-BR	LaSALLE	168	24
STA. 11+00	TO STA. 23+00			
FED. ROAD DIST. NO. 3	ILLINOIS	FEDERAL AID PROJECT		

CONTRACT NO. 87293

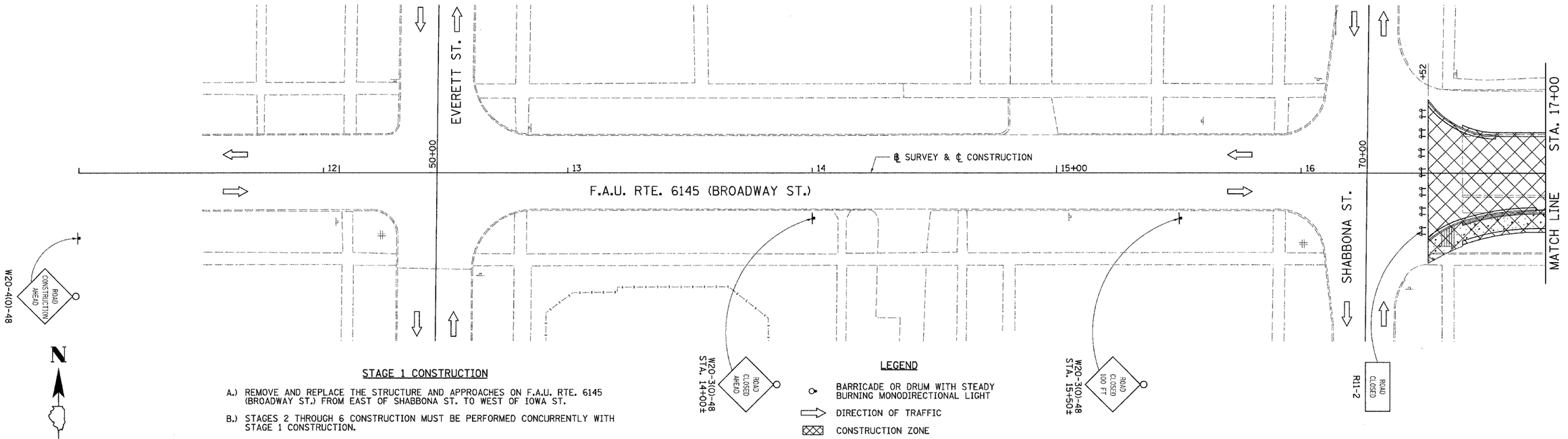

STAGE 1 CONSTRUCTION

A.) REMOVE AND REPLACE THE STRUCTURE AND APPROACHES ON F.A.U. RTE. 6145 (BROADWAY ST.) FROM EAST OF SHABBONA ST. TO WEST OF IOWA ST.

B.) STAGES 2 THROUGH 6 CONSTRUCTION MUST BE PERFORMED CONCURRENTLY WITH STAGE 1 CONSTRUCTION.

STAGE 1 MAINTENANCE OF TRAFFIC

A.) F.A.U RTE. 6145 (BROADWAY ST.) WILL BE CLOSED TO ALL TRAFFIC FROM EAST OF SHABBONA ST. TO WEST OF IOWA ST.

LEGEND

- BARRICADE OR DRUM WITH STEADY BURNING MONODIRECTIONAL LIGHT
- DIRECTION OF TRAFFIC
- CONSTRUCTION ZONE
- AREA CLOSED TO TRAFFIC
- TYPE III BARRICADE WITH FLASHING LIGHT (2-EA.)
- CONSTRUCTION SIGN

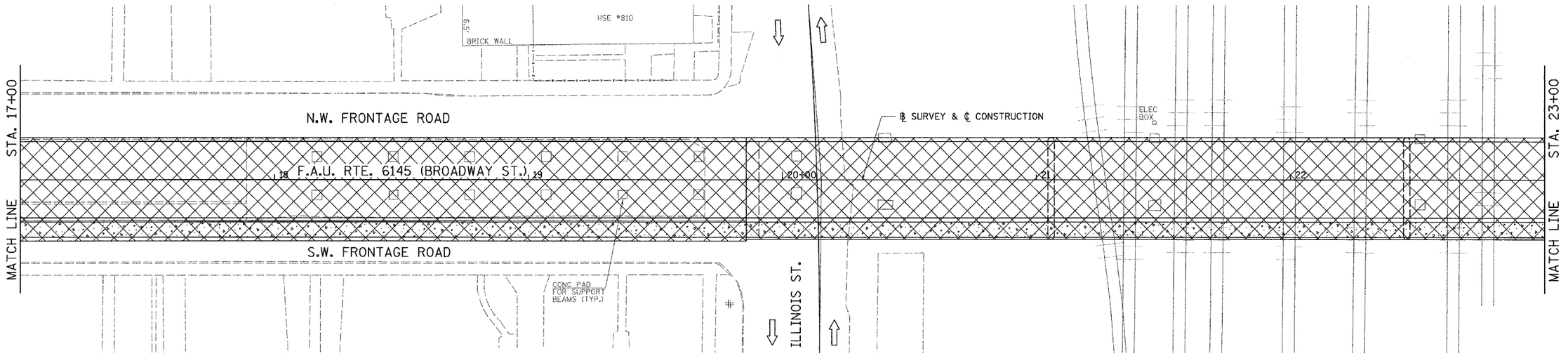

F.A.U. RTE. 6145 (BROADWAY ST.), STAGE 1 TRAFFIC CONTROL PLAN, STA. 11+00 TO STA. 23+00

F.A.U. RTE.	SECTION	COUNTY	TOTAL SHEETS	SHEET NO.
6145	01-00590-00-BR	LaSALLE	168	25
STA. 23+00	TO STA. 33+00			
FED. ROAD DIST. NO. 3	ILLINOIS	FEDERAL AID PROJECT		

CONTRACT NO. 87293

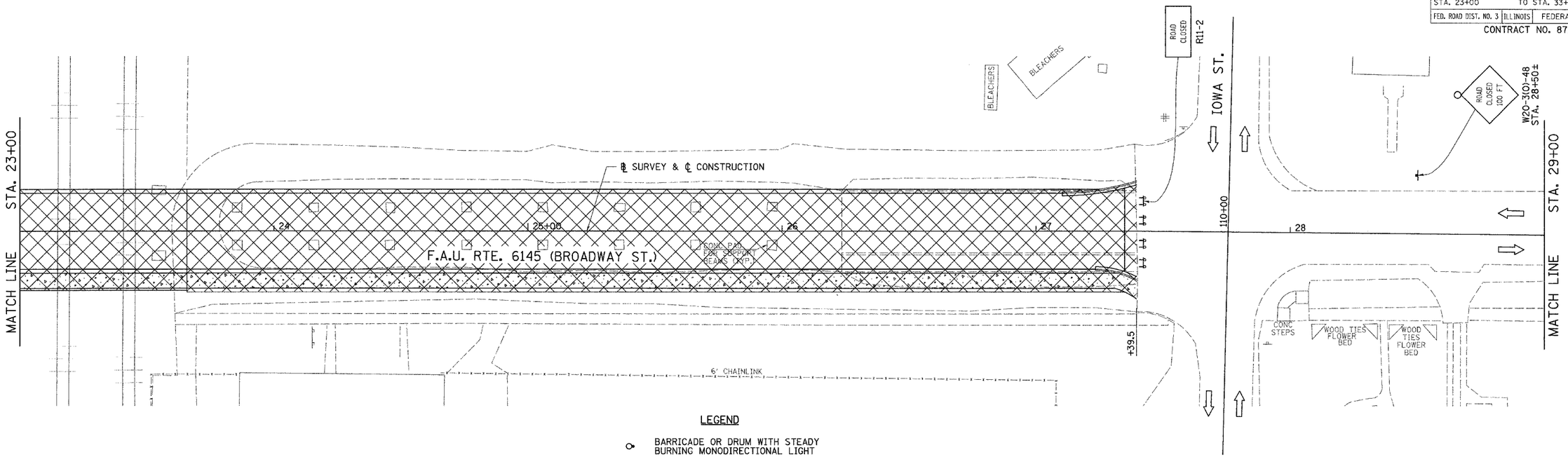

LEGEND

- BARRICADE OR DRUM WITH STEADY BURNING MONODIRECTIONAL LIGHT
- DIRECTION OF TRAFFIC
- CONSTRUCTION ZONE
- AREA CLOSED TO TRAFFIC
- TYPE III BARRICADE WITH FLASHING LIGHT (2-EA.)
- CONSTRUCTION SIGN

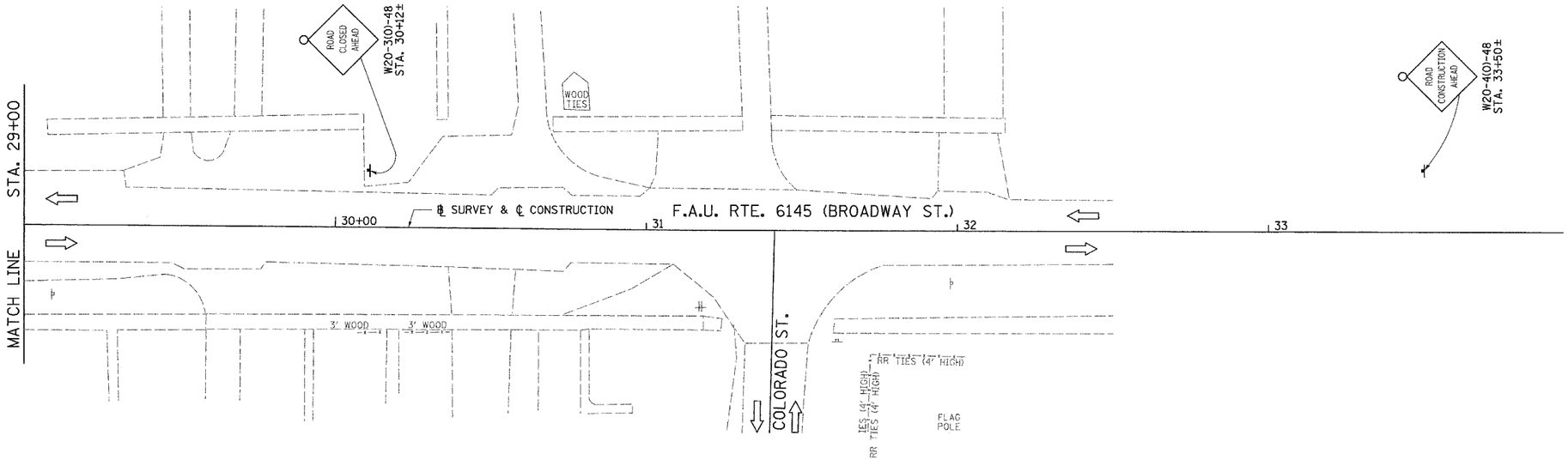

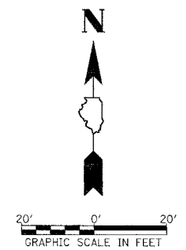

2190F102

F.A.U. RTE. 6145 (BROADWAY ST.), STAGE 1 TRAFFIC CONTROL PLAN, STA. 23+00 TO STA. 33+00

F.A.U. RTE.	SECTION	COUNTY	TOTAL SHEETS	SHEET NO.
6145	01-00590-00-BR	LaSALLE	168	26
STA. 11+00	TO STA. 23+00			
FED. ROAD DIST. NO. 3	ILLINOIS	FEDERAL AID PROJECT		

CONTRACT NO. 87293

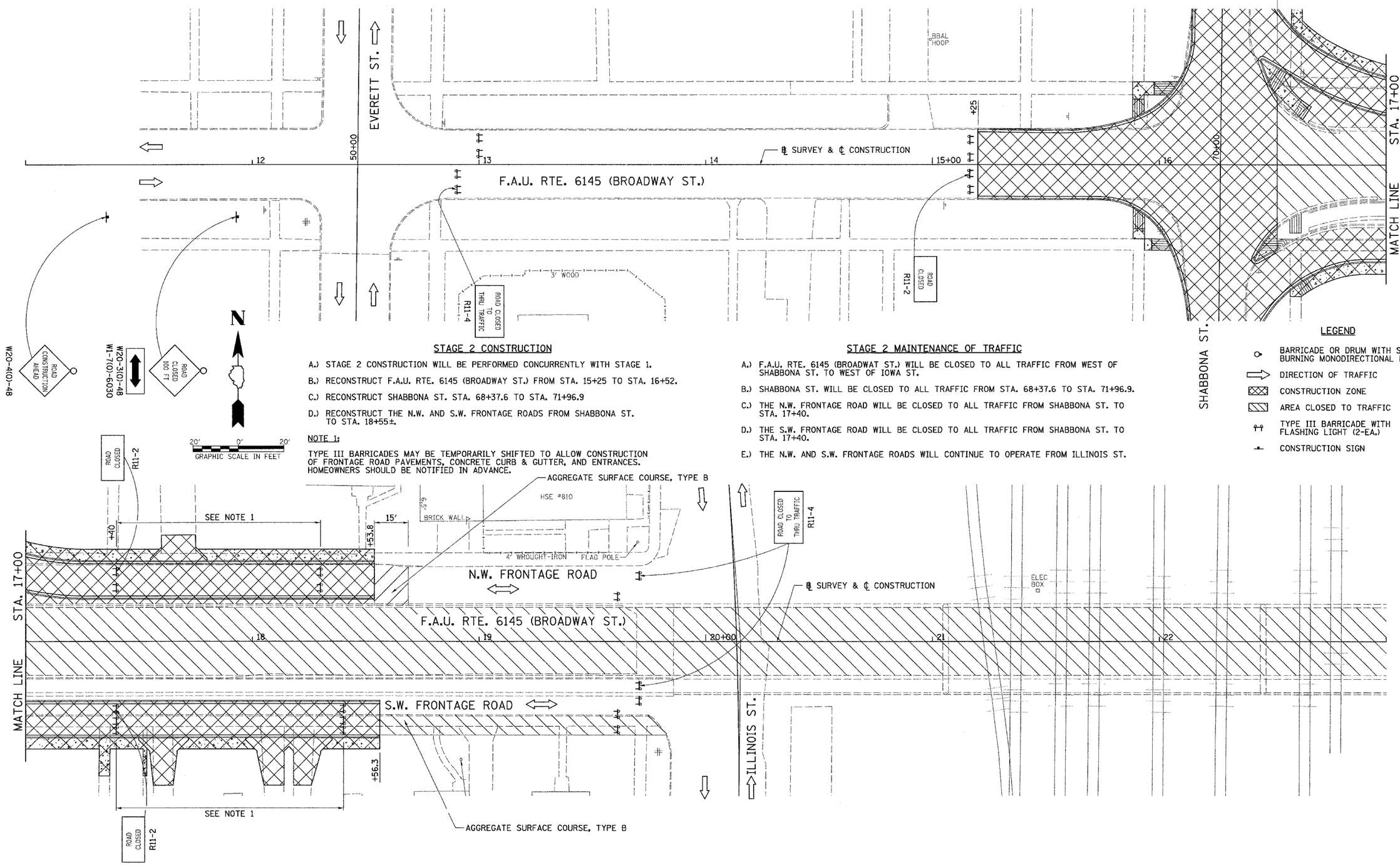

STAGE 2 CONSTRUCTION

A.) STAGE 2 CONSTRUCTION WILL BE PERFORMED CONCURRENTLY WITH STAGE 1.

B.) RECONSTRUCT F.A.U. RTE. 6145 (BROADWAY ST.) FROM STA. 15+25 TO STA. 16+52.

C.) RECONSTRUCT SHABBONA ST. STA. 68+37.6 TO STA. 71+96.9

D.) RECONSTRUCT THE N.W. AND S.W. FRONTAGE ROADS FROM SHABBONA ST. TO STA. 18+55±.

STAGE 2 MAINTENANCE OF TRAFFIC

A.) F.A.U. RTE. 6145 (BROADWAT ST.) WILL BE CLOSED TO ALL TRAFFIC FROM WEST OF SHABBONA ST. TO WEST OF IOWA ST.

B.) SHABBONA ST. WILL BE CLOSED TO ALL TRAFFIC FROM STA. 68+37.6 TO STA. 71+96.9.

C.) THE N.W. FRONTAGE ROAD WILL BE CLOSED TO ALL TRAFFIC FROM SHABBONA ST. TO STA. 17+40.

D.) THE S.W. FRONTAGE ROAD WILL BE CLOSED TO ALL TRAFFIC FROM SHABBONA ST. TO STA. 17+40.

E.) THE N.W. AND S.W. FRONTAGE ROADS WILL CONTINUE TO OPERATE FROM ILLINOIS ST.

LEGEND

- BARRICADE OR DRUM WITH STEADY BURNING MONODIRECTIONAL LIGHT
- DIRECTION OF TRAFFIC
- CONSTRUCTION ZONE
- AREA CLOSED TO TRAFFIC
- TYPE III BARRICADE WITH FLASHING LIGHT (2-EA.)
- CONSTRUCTION SIGN

RTE. NO.	SECTION	COUNTY	TOTAL SHEETS	SHEET NO.
N/A	01-00590-00-BR	LaSALLE	168	27
STA. 64+00		TO STA. 76+00		

CONTRACT NO. 87293

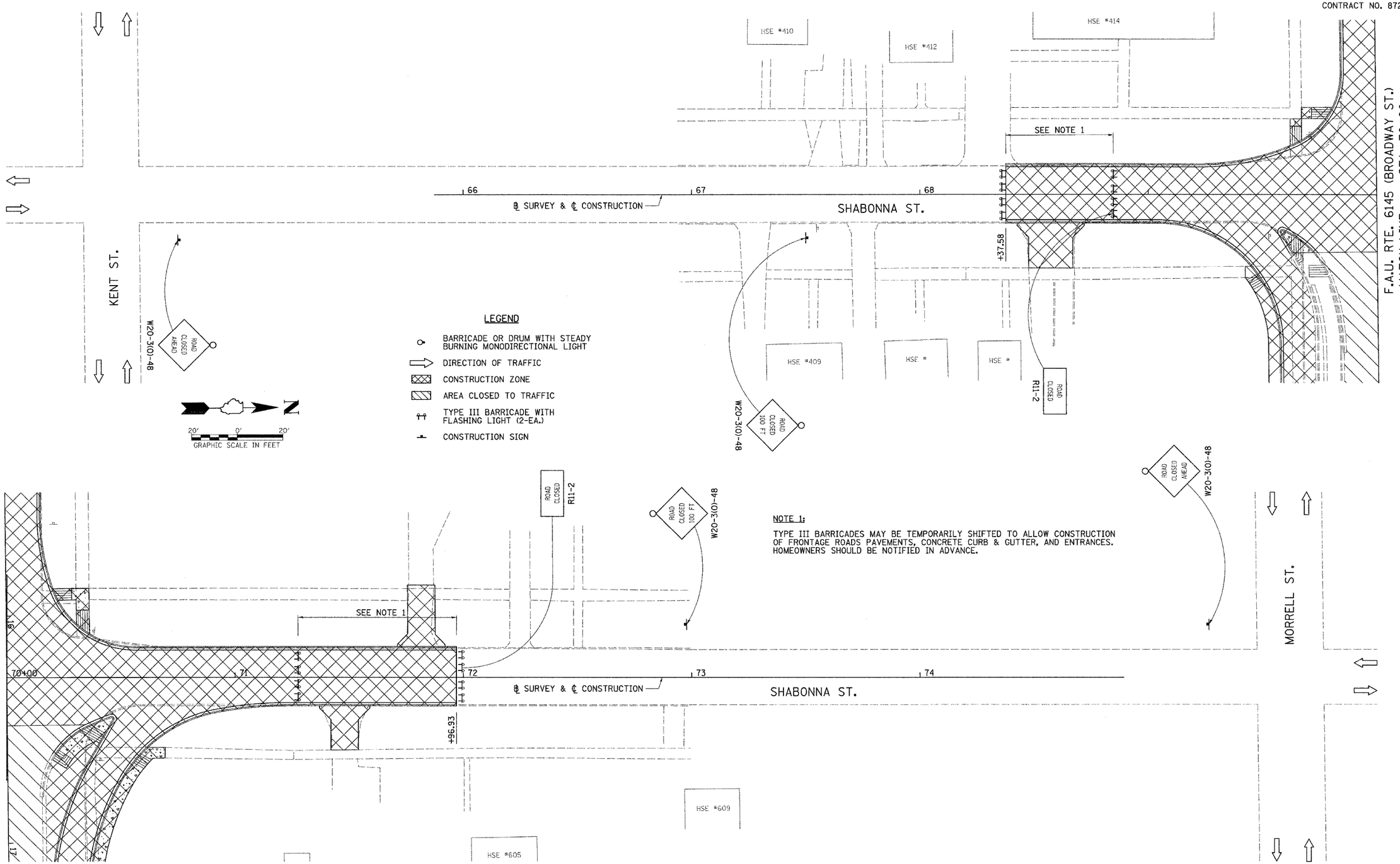

NOTE 1:

TYPE III BARRICADES MAY BE TEMPORARILY SHIFTED TO ALLOW CONSTRUCTION OF FRONTAGE ROADS PAVEMENTS, CONCRETE CURB & GUTTER, AND ENTRANCES. HOMEOWNERS SHOULD BE NOTIFIED IN ADVANCE.

RTE. NO.	SECTION	COUNTY	TOTAL SHEETS	SHEET NO.
N/A	01-00590-00-BR	LaSALLE	168	28
STA. 84+00		TO STA. 95+00		

CONTRACT NO. 87293

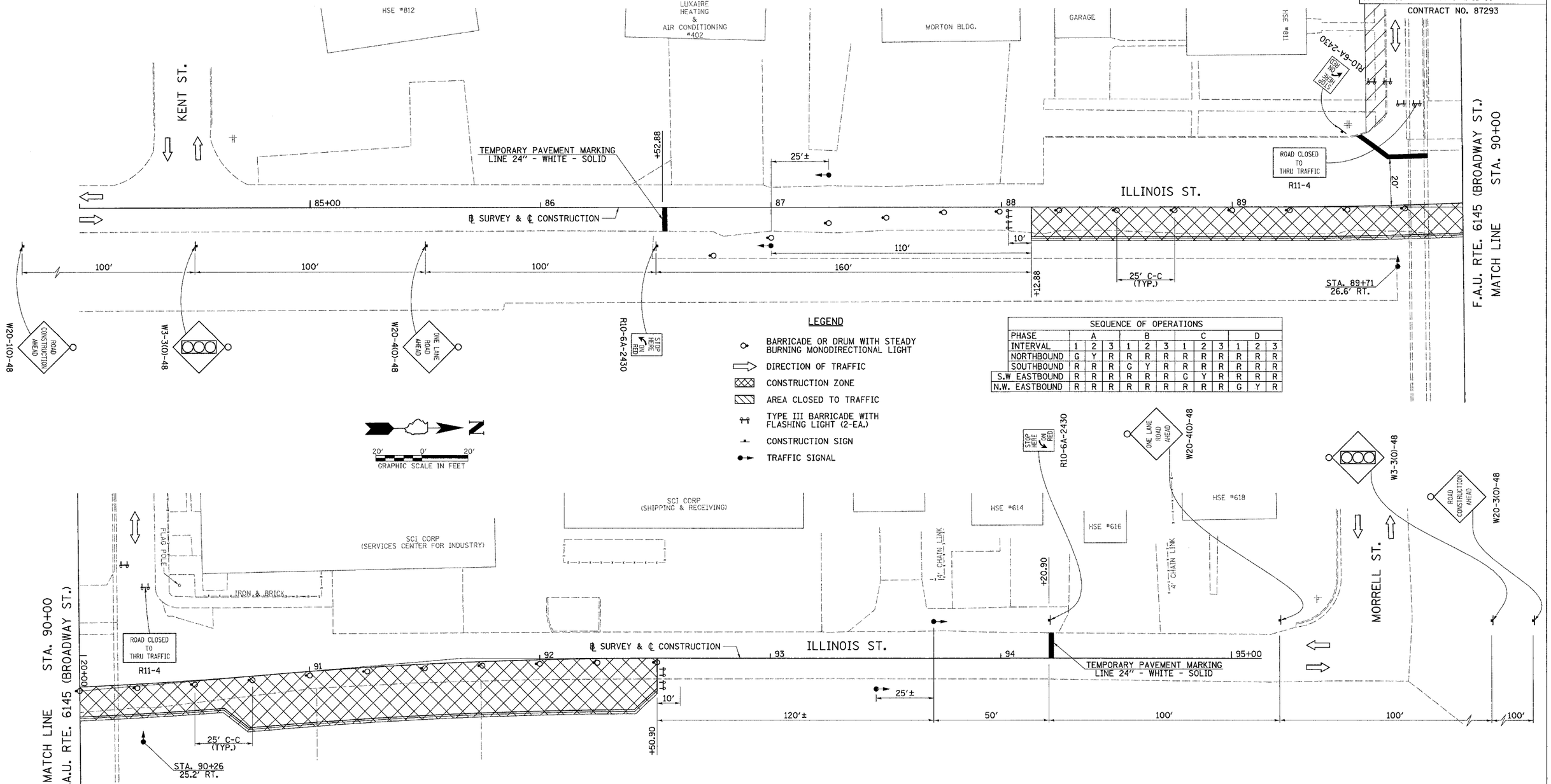

LEGEND

- BARRICADE OR DRUM WITH STEADY BURNING MONODIRECTIONAL LIGHT
- DIRECTION OF TRAFFIC
- CONSTRUCTION ZONE
- AREA CLOSED TO TRAFFIC
- TYPE III BARRICADE WITH FLASHING LIGHT (2-EA.)
- CONSTRUCTION SIGN
- TRAFFIC SIGNAL

SEQUENCE OF OPERATIONS												
PHASE	A			B			C			D		
INTERVAL	1	2	3	1	2	3	1	2	3	1	2	3
NORTHBOUND	G	Y	R	R	R	R	R	R	R	R	R	R
SOUTHBOUND	R	R	R	G	Y	R	R	R	R	R	R	R
S.W EASTBOUND	R	R	R	R	R	R	G	Y	R	R	R	R
N.W. EASTBOUND	R	R	R	R	R	R	R	R	R	G	Y	R

STAGE 3 CONSTRUCTION

A.) STAGE 3 CONSTRUCTION WILL BE PERFORMED CONCURRENTLY WITH STAGE 1 AND/OR STAGE 2.

B.) RECONSTRUCT EAST HALF OF ILLINOIS ST. FROM STA. 88+12.88 TO STA. 92+50.90.

STAGE 3 MAINTENANCE OF TRAFFIC

A.) ILLINOIS ST. WILL REMAIN OPEN TO TWO-WAY-ONE-LANE TRAFFIC AT ALL TIMES.

B.) THE N.W. FRONTAGE ROAD AND S.W. FRONTAGE ROAD WILL CONTINUE TO OPERATE FROM ILLINOIS ST.

ILLINOIS ST., STAGE 3 TRAFFIC CONTROL PLAN, STA. 84+00 TO STA. 95+00

F.A.U. RTE.	SECTION	COUNTY	TOTAL SHEETS	SHEET NO.
6145	01-00590-00-BR	LaSALLE	168	29
STA. 11+00		TO STA. 23+00		
FED. ROAD DIST. NO. 3	ILLINOIS	FEDERAL AID PROJECT		

CONTRACT NO. 87293

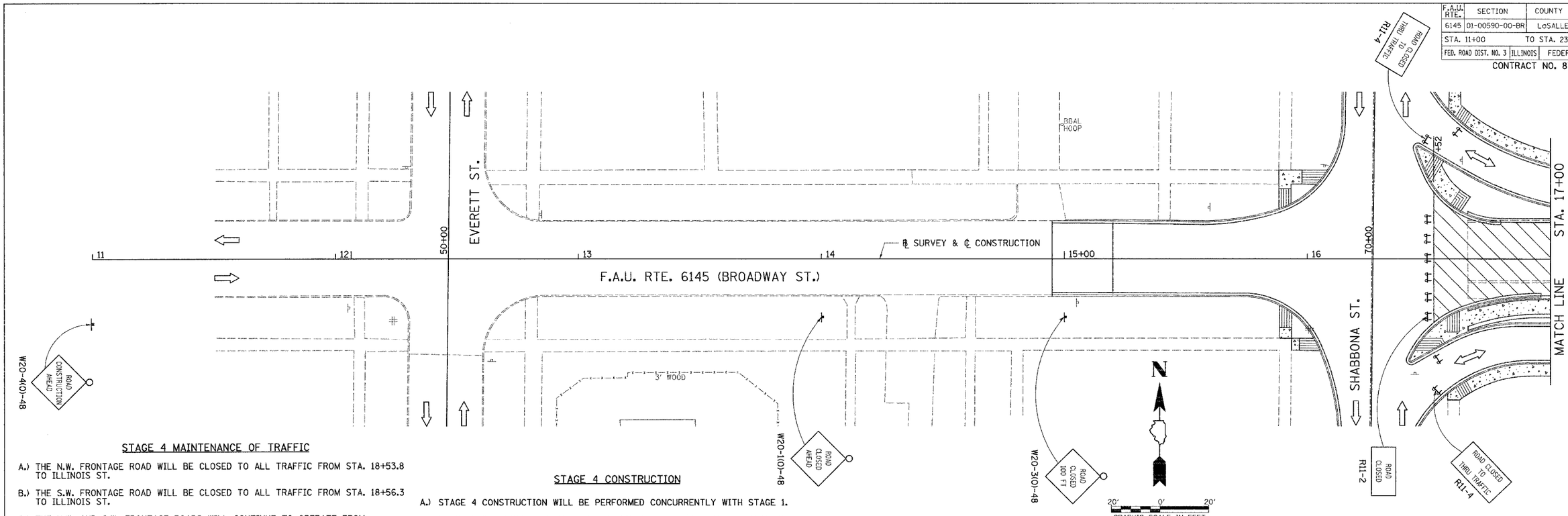

STAGE 4 MAINTENANCE OF TRAFFIC

A.) THE N.W. FRONTAGE ROAD WILL BE CLOSED TO ALL TRAFFIC FROM STA. 18+53.8 TO ILLINOIS ST.

B.) THE S.W. FRONTAGE ROAD WILL BE CLOSED TO ALL TRAFFIC FROM STA. 18+56.3 TO ILLINOIS ST.

C.) THE N.W. AND S.W. FRONTAGE ROADS WILL CONTINUE TO OPERATE FROM SHABBONA ST. TRAFFIC WILL BE ALLOWED TO GO EAST ON THE S.W. FRONTAGE ROAD AND ALLOWED ACCESS TO THE N.W. FRONTAGE ROAD BETWEEN STA. 18+00 TO STA. 19+00. THE EXISTING BRIDGE SHALL BE REMOVED BETWEEN STA. 18+00 AND STA. 19+00.

STAGE 4 CONSTRUCTION

A.) STAGE 4 CONSTRUCTION WILL BE PERFORMED CONCURRENTLY WITH STAGE 1.

B.) STAGE 2 & 3 CONSTRUCTION MUST BE COMPLETED BEFORE STARTING STAGE 4.

C.) RECONSTRUCT WEST HALF OF ILLINOIS ST. FROM STA. 88+12.88 TO STA. 92+50.90.

D.) RECONSTRUCT THE N.W. AND S.W. FRONTAGE ROADS FROM STA. 18+55± TO ILLINOIS ST.

NOTE 1:

TYPE III BARRICADES MAY BE TEMPORARILY SHIFTED TO ALLOW CONSTRUCTION OF FRONTAGE ROADS PAVEMENTS, CONCRETE CURB & GUTTER, AND ENTRANCES. HOMEOWNERS SHOULD BE NOTIFIED IN ADVANCE.

LEGEND

- BARRICADE OR DRUM WITH STEADY BURNING MONODIRECTIONAL LIGHT
- DIRECTION OF TRAFFIC
- CONSTRUCTION ZONE
- AREA CLOSED TO TRAFFIC
- TYPE III BARRICADE WITH FLASHING LIGHT (2-EA.)
- CONSTRUCTION SIGN

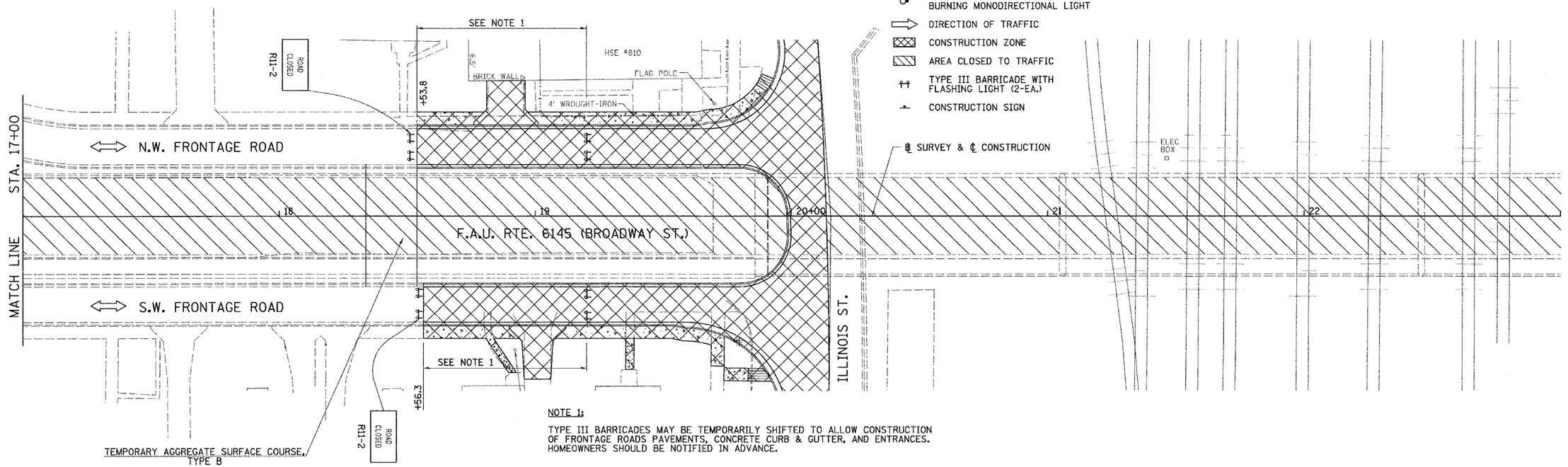

NOTE 1:

TYPE III BARRICADES MAY BE TEMPORARILY SHIFTED TO ALLOW CONSTRUCTION OF FRONTAGE ROADS PAVEMENTS, CONCRETE CURB & GUTTER, AND ENTRANCES. HOMEOWNERS SHOULD BE NOTIFIED IN ADVANCE.

F.A.U. RTE. 6145 (BROADWAY ST.), STAGE 4 TRAFFIC CONTROL PLAN, STA. 11+00 TO STA. 23+00

RTE. NO.	SECTION	COUNTY	TOTAL SHEETS	SHEET NO.
N/A	01-00590-00-BR	LaSALLE	168	30
STA. 84+00	TO STA. 95+00			

CONTRACT NO. 87293

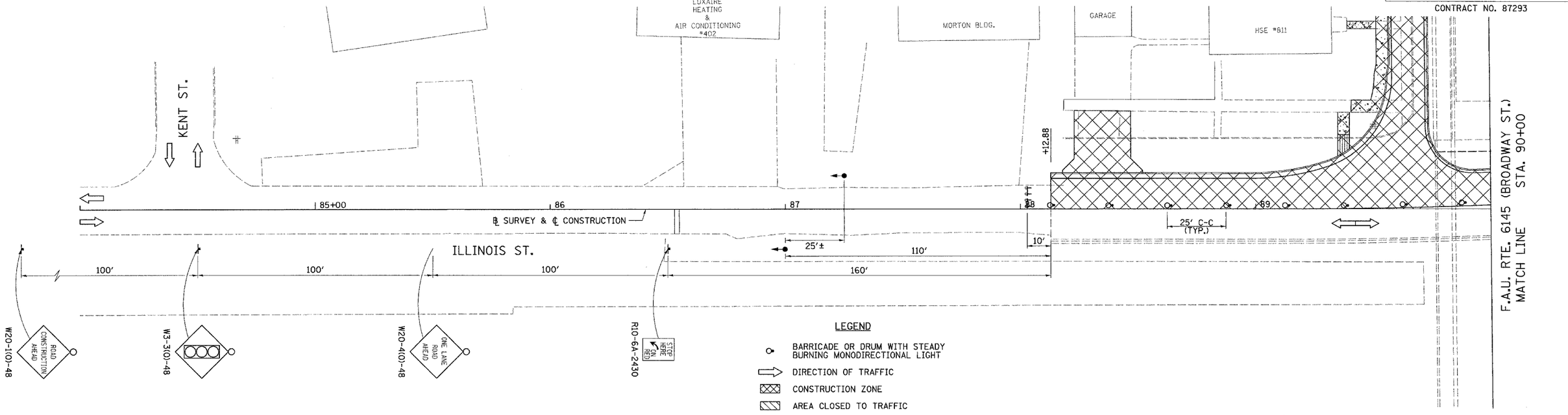

2190F402

ILLINOIS ST., STAGE 4 TRAFFIC CONTROL PLAN, STA. 84+00 TO STA. 95+00

RTE. NO.	SECTION	COUNTY	TOTAL SHEETS	SHEET NO.
N/A	01-00590-00-BR	LaSALLE	168	31
STA. 107+00		TO STA. 113+00		

CONTRACT NO. 87293

STAGE 5 CONSTRUCTION

A.) RECONSTRUCT WEST HALF OF IOWA ST.

STAGE 5 MAINTENANCE OF TRAFFIC

A.) F.A.U. RTE. 6145 (BROADWAY ST.) WILL BE CLOSED TO ALL TRAFFIC FROM EAST OF SHABBONA ST. TO EAST OF IOWA ST.

B.) IOWA ST. WILL REMAIN OPEN TO TWO-WAY ONE-LANE TRAFFIC AT ALL TIMES.

20' 0' 20'
GRAPHIC SCALE IN FEET

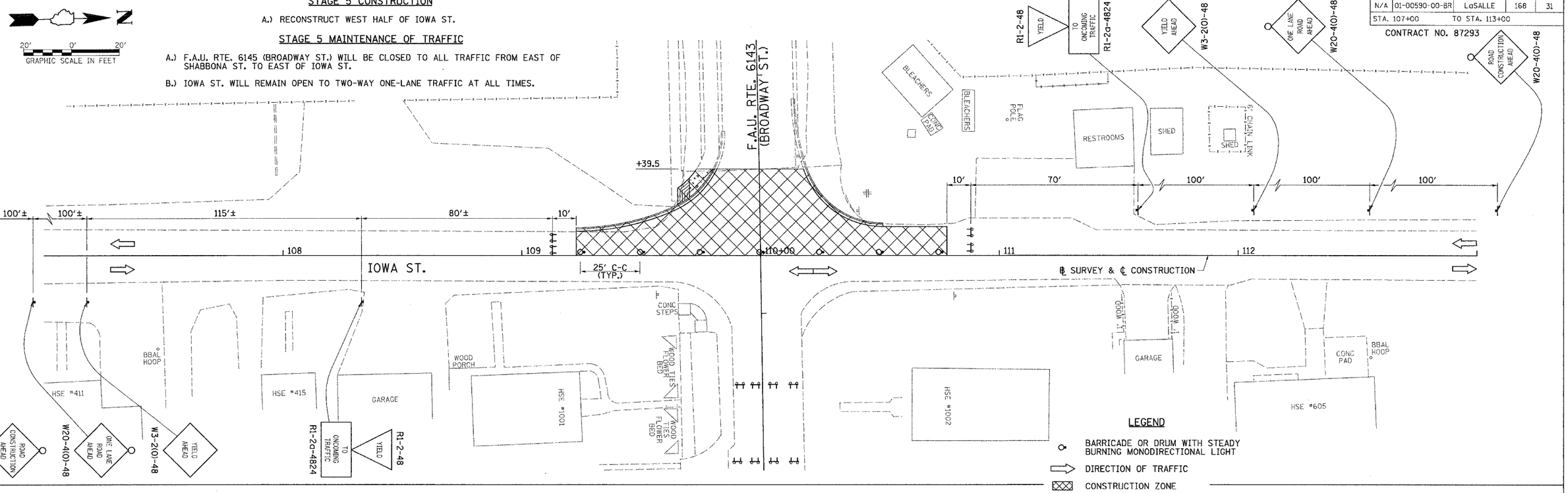

LEGEND

- BARRICADE OR DRUM WITH STEADY BURNING MONODIRECTIONAL LIGHT
- DIRECTION OF TRAFFIC
- CONSTRUCTION ZONE
- AREA CLOSED TO TRAFFIC
- TYPE III BARRICADE WITH FLASHING LIGHT (2-EA.)
- CONSTRUCTION SIGN

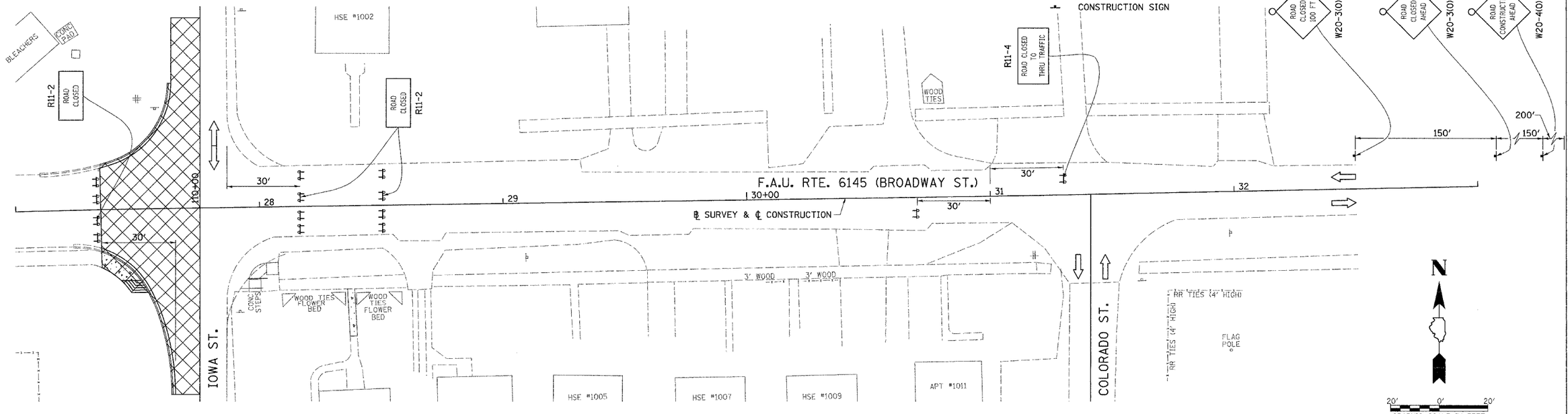

N

20' 0' 20'
GRAPHIC SCALE IN FEET

2190F501

IOWA ST. & F.A.U. RTE. 6145 (BROADWAY ST.) STAGE 5 TRAFFIC CONTROL PLAN

RTE. NO.	SECTION	COUNTY	TOTAL SHEETS	SHEET NO.
N/A	01-00590-00-BR	LaSALLE	168	32
STA. 107+00		TO STA. 113+00		

CONTRACT NO. 87293

STAGE 6 CONSTRUCTION

A.) RECONSTRUCT EAST HALF OF IOWA ST.

STAGE 6 MAINTENANCE OF TRAFFIC

A.) F.A.U. RTE. 6145 (BROADWAY ST.) WILL BE CLOSED TO ALL TRAFFIC FROM EAST OF SHABBONA ST. TO EAST OF IOWA ST.

B.) IOWA ST. WILL REMAIN OPEN TO TWO WAY ONE LANE TRAFFIC AT ALL TIMES.

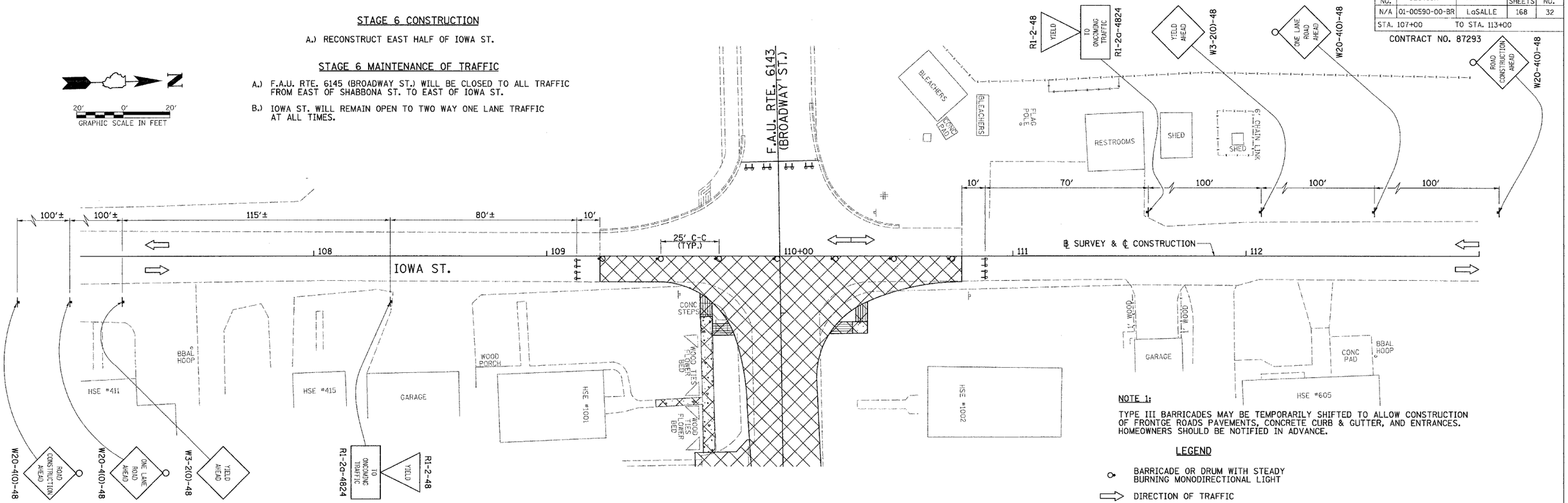

NOTE 1:

TYPE III BARRICADES MAY BE TEMPORARILY SHIFTED TO ALLOW CONSTRUCTION OF FRONTGE ROADS PAVEMENTS, CONCRETE CURB & GUTTER, AND ENTRANCES. HOMEOWNERS SHOULD BE NOTIFIED IN ADVANCE.

LEGEND

- BARRICADE OR DRUM WITH STEADY BURNING MONODIRECTIONAL LIGHT
- DIRECTION OF TRAFFIC
- CONSTRUCTION ZONE
- AREA CLOSED TO TRAFFIC
- TYPE III BARRICADE WITH FLASHING LIGHT (2-EA.)
- CONSTRUCTION SIGN

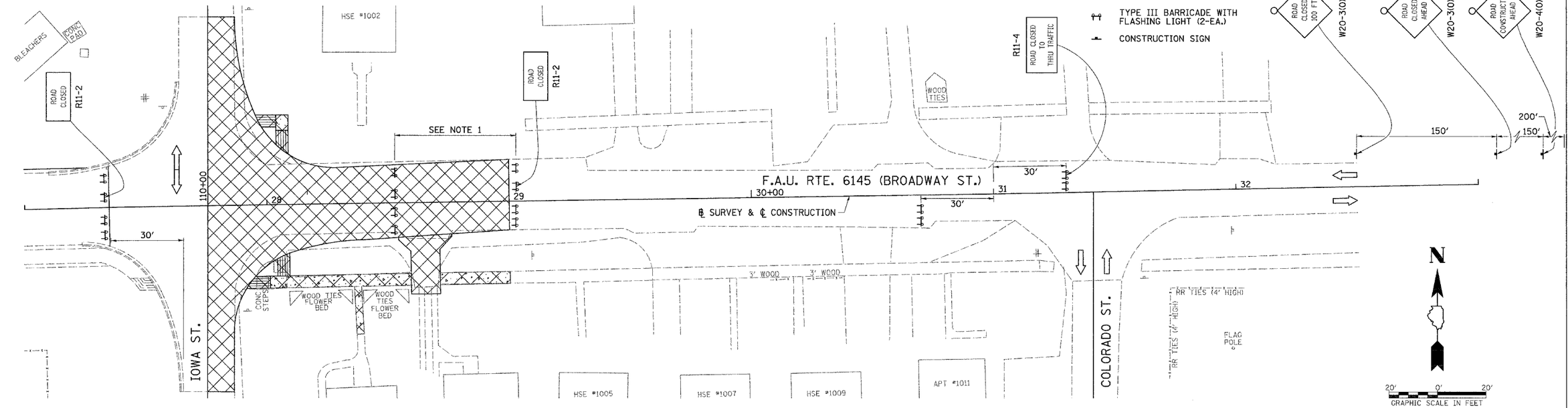

2190F601

IOWA ST. & F.A.U. RTE. 6145 (BROADWAY ST.) STAGE 6 TRAFFIC CONTROL PLAN

F.A.U. RTE.	SECTION	COUNTY	TOTAL SHEETS	SHEET NO.
6145	01-00590-00-BR	LaSALLE	168	33
STA. 11+00		TO STA. 17+00		
FED. ROAD DIST. NO. 3	ILLINOIS	FEDERAL AID PROJECT		

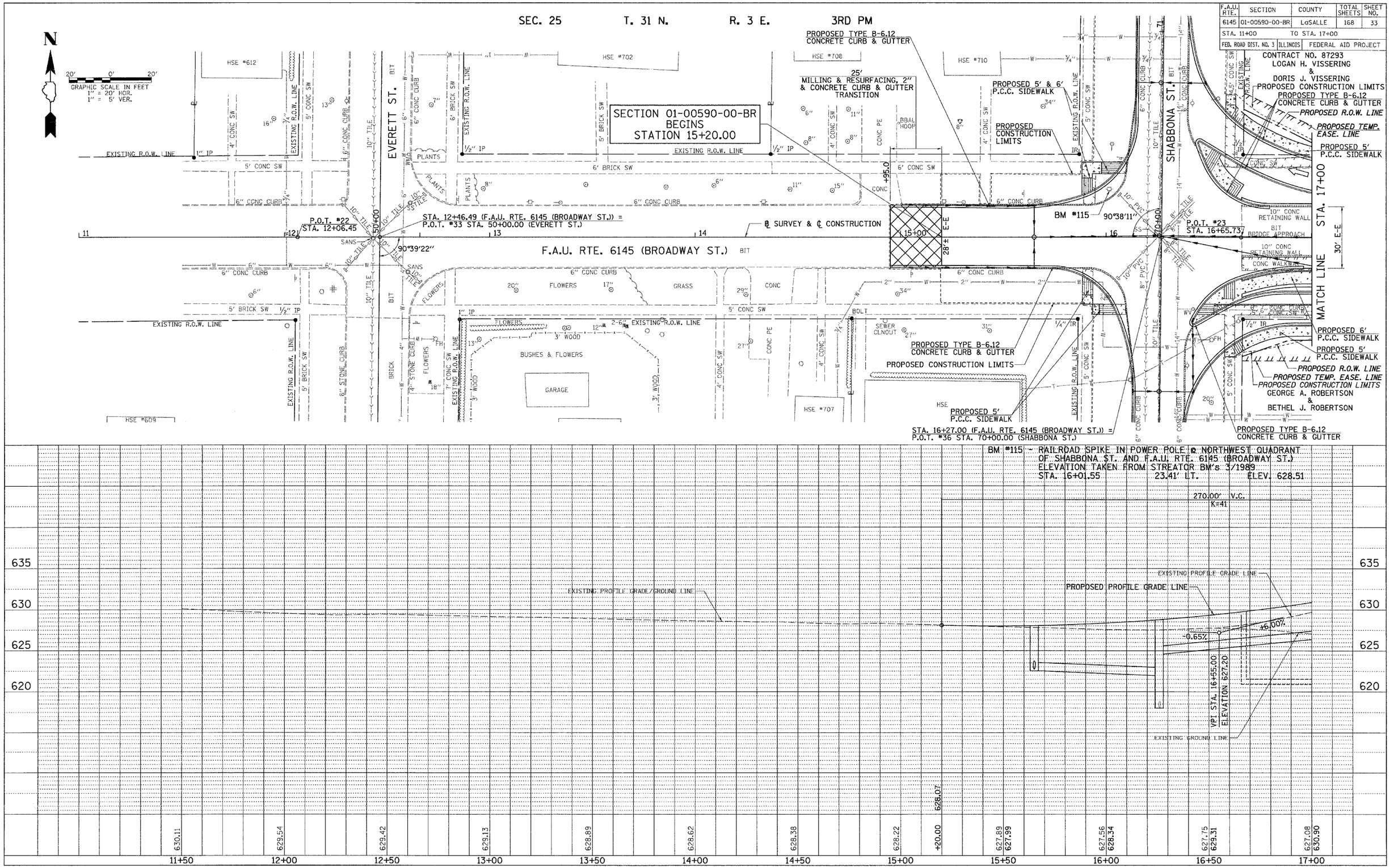

2190P001

F.A.U. RTE. 6145 (BROADWAY ST.), PLAN & PROFILE, STA. 11+00 TO STA. 17+00

F.A.U. RTE.	SECTION	COUNTY	TOTAL SHEETS	SHEET NO.
6145	01-00590-00-BR	LaSALLE	168	34
STA. 17+00		TO STA. 23+00		
FED. ROAD DIST. NO. 3	ILLINOIS	FEDERAL AID PROJECT		

CONTRACT NO. 87293

SEC. 25 T. 31 N. R. 3 E. 3RD PM

PLAN — SURVEYED / PLOTTED / ALIGNMENT CHECKED / CADD FILE NAME / NOTE BOOK / NO. / BY / DATE

PROFILE — SURVEYED / PLOTTED / GRADES CHECKED / CADD FILE NAME / STRUCTURE NO(S).FAS 0490 / NOTE BOOK / NO. / BY / DATE

PROPOSED TYPE B-6.12 CONCRETE CURB & GUTTER
PROPOSED R.O.W. LINE
PROPOSED CONSTRUCTION LIMITS
PROPOSED TEMP. EASE. LINE
PROPOSED 5' P.C.C. SIDEWALK
PROPOSED CONCRETE MEDIAN
PROPOSED 6' P.C.C. SIDEWALK
PROPOSED PROFILE GRADE LINE
EXISTING PROFILE GRADE LINE
EXISTING GOUND LINE
EXISTING R.O.W. LINE
EXISTING PERMANENT EASEMENT LINE

HSE #804
HSE #808
HSE #810
HSE #809
HSE #811
HSE #805
HSE #807
HSE #801
HSE #803

LOGAN H. VISSERING & DORIS J. VISSERING
MELISSA L. SABOL
SCI CORPORATION
GEORGE A. ROBERTSON & BETHEL J. ROBERTSON
CLIFTON W. BUSH II & STEPHANIE LYNN BUSH
FRED HARDING & EARLA HARDING
EDWARD M. SOPKO & PATRICIA R. SOPKO
GERMAN MAGANA
BURLINGTON NORTHERN AND SANTA FE RAILWAY COMPANY
SB WAREHOUSING, INC.
ILLINOIS ST.

F.A.U. RTE. 6145 (BROADWAY ST.) BIT
STA. 17+00
STA. 23+00
MATCH LINE
STA. 20+13.60 (F.A.U. RTE. 6145 (BROADWAY ST.)) = STA. 90+00.00 (ILLINOIS ST.)
℄ SURVEY & ℄ CONSTRUCTION
P.I. #39 STA. 90+00.00
85°47'10"
89°25'19"
10" CONC RETAINING WALL
CONC WALKWAY
BIT BRIDGE APPROACH
CONC PAD FOR SUPPORT BEAMS (TYP.)
5' CONC SW
5" CONC CURB
4' WROUGHT IRON FENCE
BRICK WALL
AC UNITS
ELEC BOX
CMP
E-E 30'

N
20' 0' 20'
GRAPHIC SCALE IN FEET
1" = 20' HOR.
1" = 5' VER.

VPI STA. 22+10.00
ELEVATION 660.50
+6.00%
-6.00%
360.00' V.C.
K=30

627.08 630.90
625.59 633.10
624.67 635.90
624.38 638.90
623.42 641.90
622.75 644.90
623.11 647.90
622.86 650.83
623.26 653.08
624.48 654.50
624.20 655.08
624.18 654.83
623.85 653.75

17+00 17+50 18+00 18+50 19+00 19+50 20+00 20+50 21+00 21+50 22+00 22+50 23+00

660 655 650 645 640 635 630 625 620

2190P002

F.A.U. RTE. 6145 (BROADWAY ST.), PLAN & PROFILE, STA. 17+00 TO STA. 23+00

F.A.U. RTE.	SECTION	COUNTY	TOTAL SHEETS	SHEET NO.
6145	01-00590-00-BR	LaSALLE	168	35
STA. 23+00	TO STA. 29+00			
FED. ROAD DIST. NO. 3	ILLINOIS	FEDERAL AID PROJECT		

CONTRACT NO. 87293

SEC. 25 T. 31 N. R. 3 E. 3RD PM

SECTION 01-00590-00-BR
ENDS
STATION 29+00.00

PLAN
SURVEYED
DRAWN
ALIGNMENT CHECKED
ALIGNMENT RECHECKED
NOTE BOOK
NO.
CADD FILE NAME
BY
DATE

PROFILE
SURVEYED
DRAWN
GRADES CHECKED
GRADES RECHECKED
NOTE BOOK
NO.
STRUCTURE NO/FAI NO/FAP NO/CHKD
BY
DATE

PROPOSED TEMP. EASE. LINE
5' CHAIN LINK
6' CHAIN LINK
SB WAREHOUSING, INC.
TIMED, L.L.C.
PROPOSED AGGREGATE SHOULDER, 2'
PROPOSED CONSTRUCTION LIMITS
EXISTING PERMANENT EASEMENT LINE
P.O.T. #24
STA. 23+50.30
℄ SURVEY & ℄ CONSTRUCTION
EXISTING R.O.W. LINE
P.I. #25
STA. 27+39.80
BM #116
METER VAULT
BLEACHERS
CONC PAD
STA. 23+00
MATCH LINE
E-E
30'
23
24
25+00
26
27
28
AGG
GRASS
CONC PAD FOR SUPPORT BEAMS (TYP.)
10" CONC RETAINING WALL
BIT BRIDGE APPROACH
CONC WALKWAY
180°29'25"
110+00
STA. 27+75.57 (F.A.U. RTE. 6145 (BROADWAY ST.)) =
P.O.T. #43 STA. 110+00.00 (IOWA ST.)
90°51'26"
F.A.U. RTE. 6145 (BROADWAY ST.)
STA. 29+00
29'± E-E MATCH EXISTING
1/2" IR
IP
4' CONC SW
3' CONC SW
37"
32"
27"
CONC
PROPOSED 6' P.C.C. SIDEWALK
6' CHAINLINK
MONITOR WELL
BLDG
CITY OF STREATOR
PROPOSED PERMANENT EASEMENT LINE
PROPOSED R.O.W. LINE
IOWA ST.
BIT
6" CONC CURB
+03.06
25' MILLING & RESURFACING, 2"
HSE #1002
HSE #1001
JOHN P. HAAG
HSE #1003
ALBERT KOOI
AUDREY KOOI &
MARTHA J. FINNEGAN
12.0'
+65.2
PE
+97.82
WOOD TIES FLOWER BED
BRICK SW
BRK
CONC STEPS
38"
58"
+00
+50
8" PVC SANS
6" W
1" TP
PROPOSED 5' P.C.C. SIDEWALK
PROPOSED AGGREGATE SHOULDER, 2' (TYP.)
PROPOSED TEMP. EASE. LINE

20' 0' 20'
GRAPHIC SCALE IN FEET
1" = 20' HOR.
1" = 5' VER.

N

BM #116 - RAILROAD SPIKE IN POWER POLE ℄ NORTHWEST QUADRANT OF IOWA ST. AND F.A.U. RTE. 6145 (BROADWAY ST.)
ELEVATION TAKEN FROM STREATOR BM's 3/1989
STA. 27+53.58 39.84' LT. ELEV. 627.48

660 655 650 645 640 635 630 625 620

EXISTING PROFILE GRADE LINE
PROPOSED PROFILE GRADE LINE
EXISTING GROUND LINE
205.00' V.C.
K=41
6.00%
-0.94%
SP. DT. RT. +0.60%
+00 DT. RT. 623.00
+50 DT. RT. 623.30
VPI STA. 27+85.00
ELEVATION 626.00

| | | |

F.A.U. RTE.	SECTION	COUNTY	TOTAL SHEETS	SHEET NO.
6145	01-00590-00-BR	LaSALLE	168	36
STA. 29+00		TO STA. 35+00		
FED. ROAD DIST. NO. 3	ILLINOIS	FEDERAL AID PROJECT		

CONTRACT NO. 87293

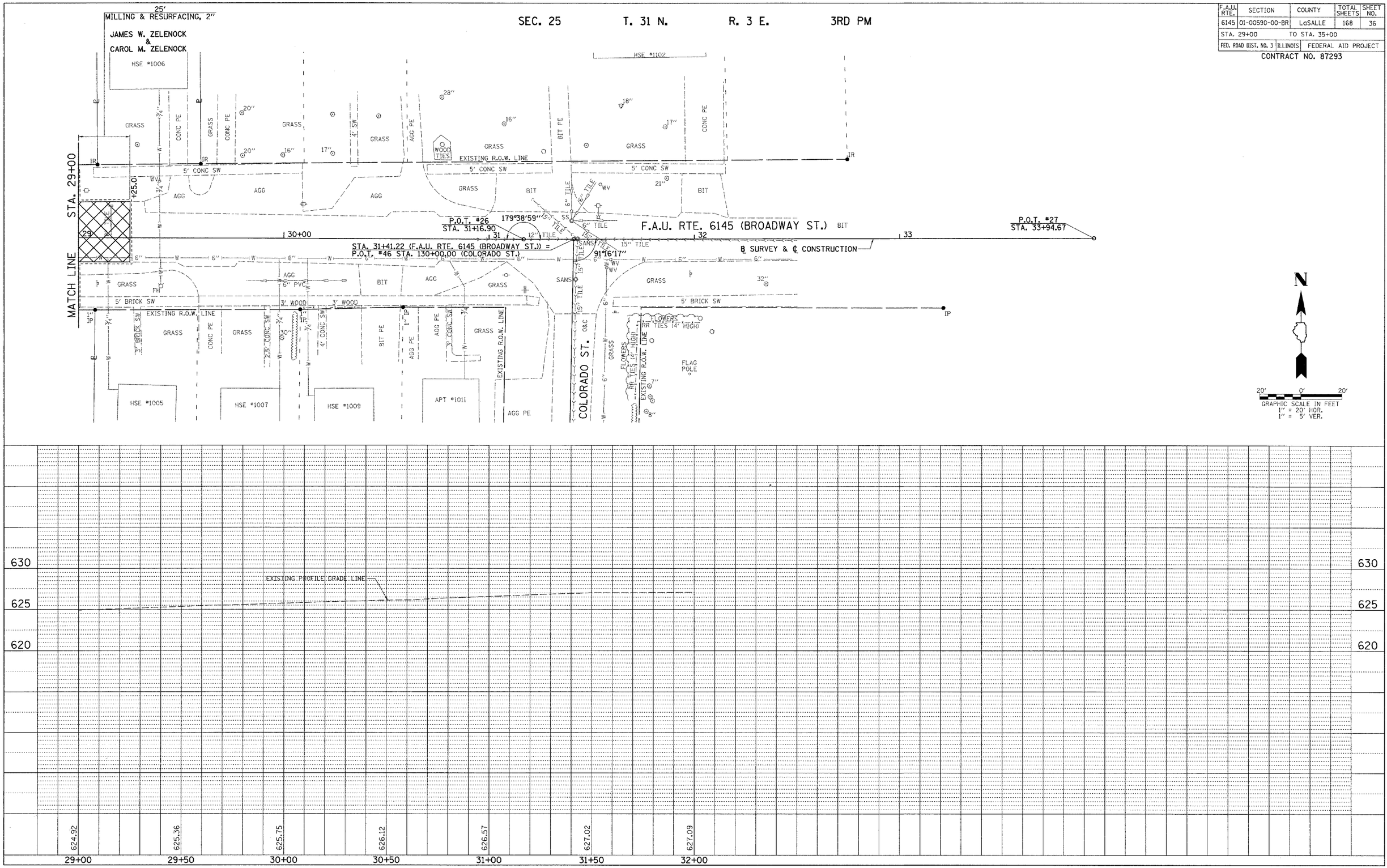

PLAN NOTE BOOK NO. — SURVEYED / PLOTTED / ALIGNMENT CHECKED / RT. OF WAY CHECKED / CADD FILE NAME — BY — DATE

PROFILE NOTE BOOK NO. — SURVEYED / PLOTTED / GRADES CHECKED / B.M. NOTED / STRUCTURE NOTATNS CHKD — BY — DATE

2190P004

F.A.U. RTE. 6145 (BROADWAY ST.), PLAN & PROFILE, STA. 29+00 TO STA. 35+00

F.A.U. RTE.	SECTION	COUNTY	TOTAL SHEETS	SHEET NO.
6145	01-00590-00-BR	LaSALLE	168	37
STA. 15+00		TO STA. 21+00		
FED. ROAD DIST. NO. 3	ILLINOIS	FEDERAL AID PROJECT		

CONTRACT NO. 87293

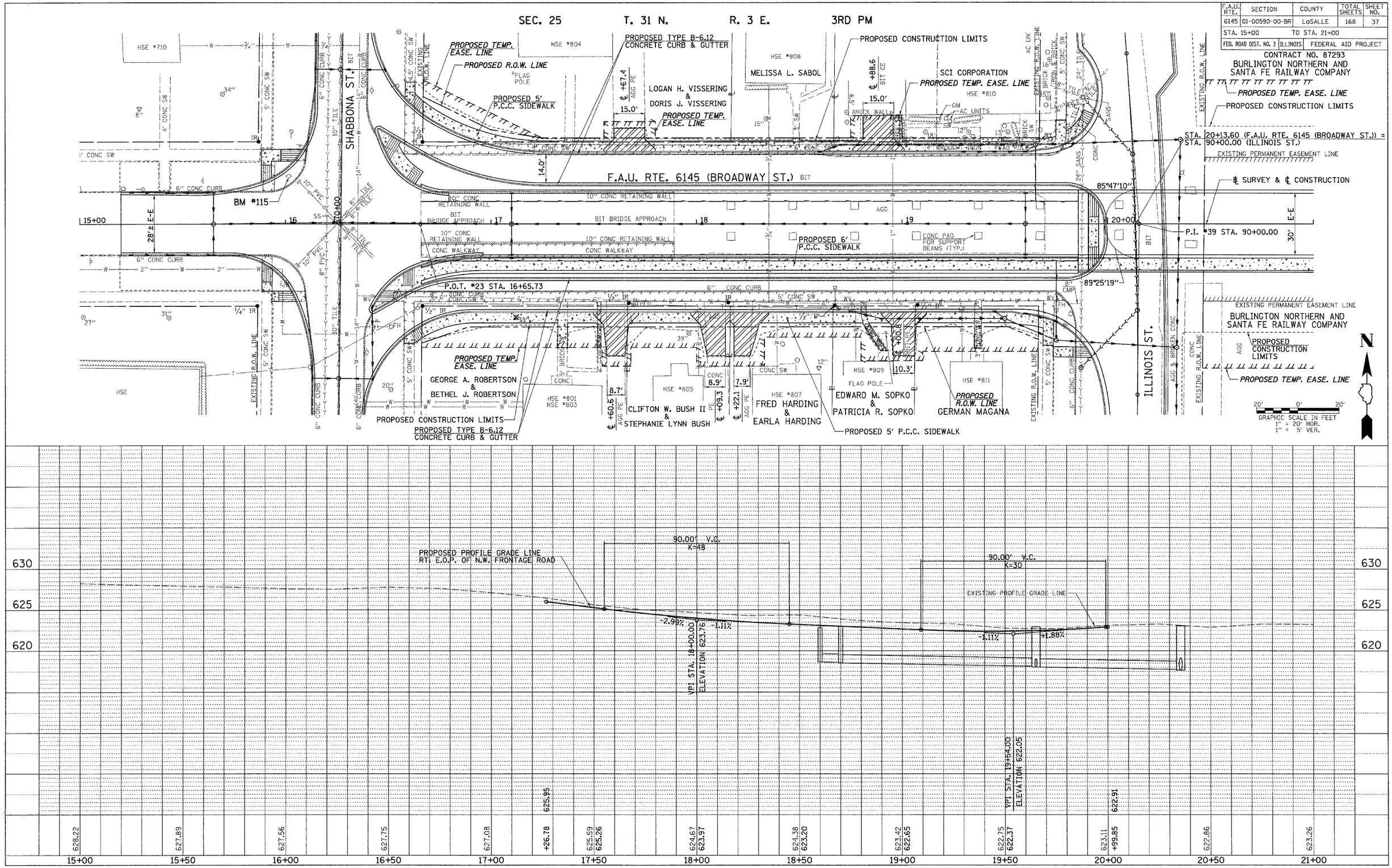

2190P005

F.A.U. RTE. 6145 (BROADWAY ST.), N.W. FRONTAGE ROAD, PLAN & PROFILE, STA. 15+00 TO STA. 21+00

F.A.U. RTE.	SECTION	COUNTY	TOTAL SHEETS	SHEET NO.
6145	01-00590-00-BR	LaSALLE	168	38
STA. 15+00		TO STA. 21+00		
FED. ROAD DIST. NO. 3	ILLINOIS	FEDERAL AID PROJECT		

CONTRACT NO. 87293
BURLINGTON NORTHERN AND SANTA FE RAILWAY COMPANY

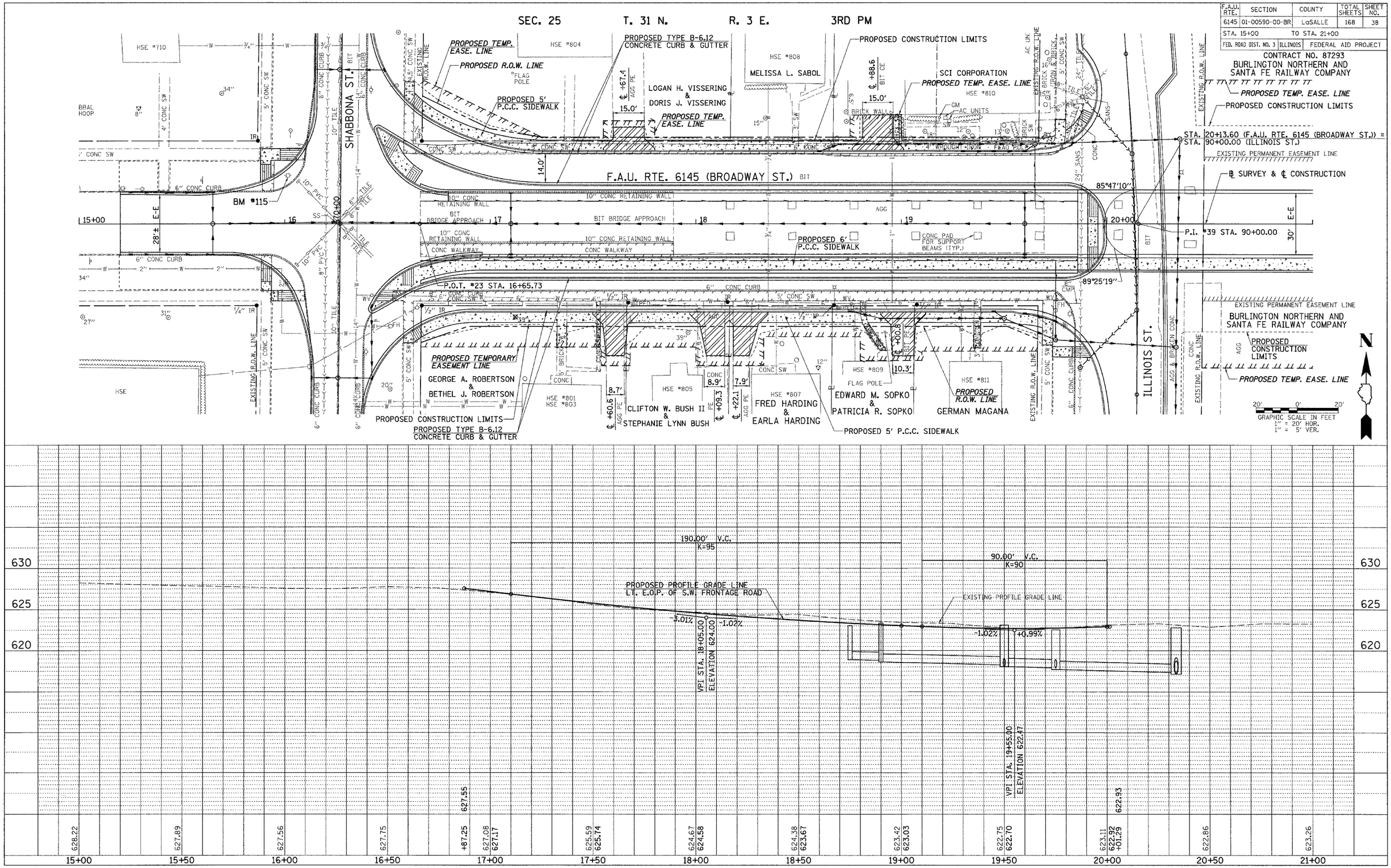

2190P006

F.A.U. RTE. 6145 (BROADWAY ST.), S.W. FRONTAGE ROAD, PLAN & PROFILE, STA. 15+00 TO STA. 21+00

RTE. NO.	SECTION	COUNTY	TOTAL SHEETS	SHEET NO.
N/A	01-00590-00-BR	LaSALLE	168	39
STA. 67+00		TO STA. 73+00		

CONTRACT NO. 87293

SEC. 25 T. 31 N. R. 3 E. 3RD PM

PLAN

BY	DATE
SURVEYED	
PLOTTED	
ALIGNMENT CHECKED	
GRADES CHECKED	
R.L.S. NO. REVIEWED	
NOTE BOOK	
NO.	
CADD FILE NAME	

PROFILE

BY	DATE
SURVEYED	
PLOTTED	
GRADES CHECKED	
R.L.S. NO. REVIEWED	
NOTE BOOK	
NO.	
STRUCTURE NO'S/ING CHKD	

25' MILLING & RESURFACING, 2"

HSE #410 HSE #412 HSE #414 HSE #710 HSE #608 HSE #409 HSE # HSE # HSE #804 HSE #605

4' CONC SW GRASS AGG PE GRASS AGG BRICK PE CONC SW CONC PE 5' BRICK SW BRICK SW 5' CONC SW 4' BRICK SW 4.5' CONC SW 2.5' CONC SW

EXISTING R.O.W. LINE

PROPOSED 5' P.C.C. SIDEWALK

PROPOSED CONSTRUCTION LIMITS

PROPOSED TYPE B-6.12 CONCRETE CURB & GUTTER

6" CONC CURB 8" PVC 10" TILE 6" TILE 15" TILE SS

℄ CONSTRUCTION

℄ SURVEY

STA. 16+27.00 (BROADWAY ST.) = P.O.T. #36 STA. 70+00.00 (SHABBONA ST.)

16° (BROADWAY ST.) 90°38'14" BM #115

SHABBONA ST. BIT

67 68 70+00 71 72

℄ +12.58 E-E 23' +21.93 12.0'

6" CONC CURB 6" CONC CURB 6" CONC CURB 6" CONC CURB

SANS MH FH WV

1/2" IP 1/4" IP 1" IP

℄ +57.3 19.4'

PROPOSED TYPE B-6.12 CONCRETE CURB & GUTTER

PROPOSED R.O.W. LINE

PROPOSED 5' P.C.C. SIDEWALK

PROPOSED TEMP. EASE. LINE

F.A.U. RTE. 6145

11' BRIDGE APPROACH

CONC WALKWAY 10" CONC RETAINING WALL BIT

6" CONC CURB AGG PE

℄ +48.0 12.0'

SHABBONA ST. IMPROVEMENT BEGINS STATION 68+37.58

SHABBONA ST. IMPROVEMENT ENDS STATION 71+96.93

20' 0' 20'
GRAPHIC SCALE IN FEET
1" = 20' HOR.
1" = 5' VER.

EXISTING PROFILE GRADE LINE

PROPOSED PROFILE GRADE LINE

90.00' V.C. K=53

90.00' V.C. K=47

90.00' V.C. K=130

+2.01% +0.32% +0.00% -2.08% -2.77% -0.90%

VPI STA. 68+85.00 ELEVATION 626.55

VPI STA. 69+86.00 ELEVATION 628.58

VPI STA. 70+14.00 ELEVATION 628.58

VPI STA. 70+59.00 ELEVATION 627.64

VPI STA. 71+49.00 ELEVATION 625.15

630 625 620

624.83 625.56 626.15 626.40 626.44 626.45 626.70 626.94 627.11 627.86 627.51 628.58 626.65 627.78 625.88 626.51 625.20 625.34 624.72 624.72 624.30 624.39

+37.58 +96.93

67+00 67+50 68+00 68+50 69+00 69+50 70+00 70+50 71+00 71+50 72+00 72+50 73+00

2190P009

SHABBONA ST., PLAN & PROFILE, STA. 67+00 TO STA. 73+00

F.A.U. RTE.	SECTION	COUNTY	TOTAL SHEETS	SHEET NO.
6145	01-00590-00-BR	LaSALLE	168	40
STA. 87+00	TO STA. 93+00			
FED. ROAD DIST. NO. 3	ILLINOIS	FEDERAL AID PROJECT		

CONTRACT NO. 87293

SEC. 25 T. 31 N. R. 3 E. 3RD PM

CHARLES E. MORSCHEISER & LINDA E. MORSCHEISER

SCI CORPORATION

PROPOSED CONSTRUCTION LIMITS

PROPOSED TYPE B-6.24 CONCRETE CURB & GUTTER

ILLINOIS ST. IMPROVEMENT BEGINS STATION 88+12.88

ILLINOIS ST. IMPROVEMENT ENDS STATION 92+50.90

PROPOSED R.O.W. LINE

PROPOSED TEMP. EASE. LINE

F.A.U. RTE. 6145 (BROADWAY ST.)

ILLINOIS ST.

BURLINGTON NORTHERN AND SANTA FE RAILWAY COMPANY

BURLINGTON NORTHERN AND SANTA FE RAILWAY COMPANY

PROPOSED CURVE IL.-1
P.I. STA. 90+00.00
Δ = 4°47'31" (LT)
D = 2°53'27"
R = 1,981.98'
T = 82.93'
L = 165.76'
E = 1.73'
P.C. STA. 89+17.07
P.T. STA. 90+82.84
S.E. = N.C.

PROPOSED CURVE IL.-2
P.I. STA. 91+66.92
Δ = 4°51'30" (RT)
D = 2°53'27"
R = 1,981.98'
T = 84.08'
L = 168.06'
E = 1.78'
P.C. STA. 90+82.84
P.T. STA. 92+50.90
S.E. = N.C.

STA. 20+13.60 (F.A.U. RTE. 6145 (BROADWAY ST.)) = STA. 90+00.00 (ILLINOIS ST.)

STA. 90+87.63 21.00' LT.

STA. 91+09.48 21.00' LT.

STA. 92+26.36 13.00' LT.

STA. 92+30.55 21.00' LT.

STA. 92+50.90 21.00' LT.

STA. 90+71.92 22.25' RT.

STA. 90+61.94 13.00' RT.

P.T. STA. 92+50.90

STA. 92+50.90 13.00' RT.

STA. 92+40.84 22.25' RT.

P.C. STA. 89+17.07

P.R.C. STA. 90+82.84

P.I. #40 STA. 91+66.92

P.I. #39 STA. 90+00.00

BM #9

25' MILLING & RESURFACING, 2"

GRAPHIC SCALE IN FEET
1" = 20' HOR.
1" = 5' VER.

BM #9 - CHISELED "□" ON THE CORNER OF THE CONCRETE CURB ON WEST SIDE OF ILLINOIS ST., IN FRONT OF SCI CORP. STA. 92+25.80 11.84' LT. ELEV. 622.85

EXISTING PROFILE GRADE LINE

PROPOSED PROFILE GRADE LINE

VPI STA. 90+00.00
ELEVATION 623.22

VPI STA. 91+75.00
ELEVATION 622.34

+0.30% -0.50% -0.50% +0.30%

90.00' V.C.

90.00' V.C.
K=112

622.66 +12.88 622.57 +50.90

622.49 622.56 622.68 622.73 622.77 622.82 622.92 622.91 623.07 623.22 623.13 622.80 622.97 622.55 622.72 622.33 622.48 622.35 622.43 622.52 622.57 622.61

87+00 87+50 88+00 88+50 89+00 89+50 90+00 90+50 91+00 91+50 92+00 92+50 93+00

625 620

2190P008

ILLINOIS ST., PLAN & PROFILE, STA. 87+00 TO STA. 93+00

F.A.U. RTE.	SECTION	COUNTY	TOTAL SHEETS	SHEET NO.
6145	01-00590-00-BR	LaSALLE	168	41
STA. 15+50		TO STA. 17+00		
FED. ROAD DIST. NO. 3	ILLINOIS	FEDERAL AID PROJECT		

CONTRACT NO. 87293

N

20' 0' 20'
GRAPHIC SCALE IN FEET

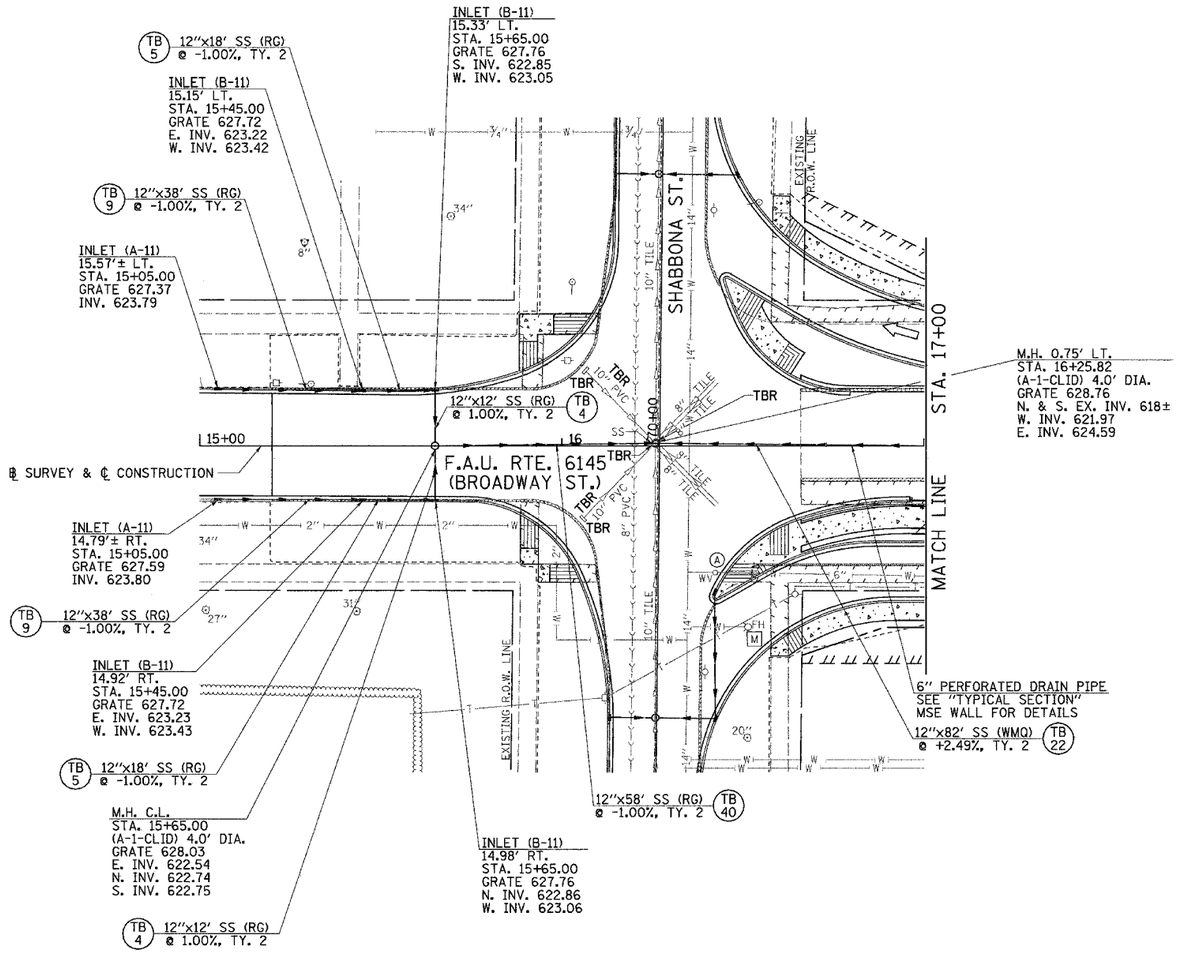

NOTE: FOR DRAINAGE PROFILE, SEE DRAINAGE PROFILE SHEETS.

F.A.U. RTE.	SECTION	COUNTY	TOTAL SHEETS	SHEET NO.
6145	01-00590-00-BR	LaSALLE	168	42
STA. 17+00	TO STA. 23+00			
FED. ROAD DIST. NO. 3	ILLINOIS	FEDERAL AID PROJECT		

CONTRACT NO. 87293

N

20' 0' 20'
GRAPHIC SCALE IN FEET

DRAINAGE STRUCTURE, TYPE 1
W/1, TYPE 20 FRAME & GRATE
15.00' LT.
STA. 17+10.00
GRATE 631.06
INV. 626.89

M.H. C.L.
STA. 17+10.00
(A-1-CLID) 4.0' DIA.
GRATE 631.29
E. INV. 627.12
N. INV. 626.79
W. INV. 626.59
S. INV. 626.79

TB 34 12"x92' SS (RG) @ -0.44%, TY. 2

INLET (B-1-CLID)
38.58' LT.
STA. 18+70.00
GRATE 623.00
E. INV. 618.52
S.W. INV. 618.62

TB 3 12"x10' SS (RG) @ -0.44%, TY. 2

INLET (A-11)
35.08' LT.
STA. 18+60.00
GRATE 622.82
INV. 618.65

TB 1 12"x4' SS (RG) @ -0.44%, TY. 2

INLET (B-11)
35.08' LT.
STA. 19+60.00
GRATE 622.14
N.E. INV. 618.13
W. INV. 618.23

TB 3 12"x12' SS (RG) @ -0.44%, TY. 1

DRAINAGE STRUCTURE, TYPE 1
W/1, TYPE 20 FRAME & GRATE
15.00' LT.
STA. 19+60.00
GRATE 645.27
INV. 641.10

INLET (B-11)
35.08' LT.
STA. 19+45.00
GRATE 622.09
E. INV. 618.29
W. INV. 618.39

INLET (A-11)
35.08' LT.
STA. 19+30.00
GRATE 622.12
INV. 618.44

TB 3 12"x14' SS (RG) @ -0.44%, TY. 1

M.H. 38.58' LT.
STA. 19+65.00
(A-1-CLID) 4.0' DIA.
GRATE 622.91
E. INV. 618.02
W. INV. 618.12
S.W. INV. 618.12

M.H. C.L.
STA. 19+60.00
(A-1-CLID) 4.0' DIA.
GRATE 645.50
N. INV. 641.00
S. INV. 641.00
W. INV. 640.80

12"x68' SS (RG) @ -0.40%, TY. 2 TB 27

℄ SURVEY & ℄ CONSTRUCTION

N.W. FRONTAGE ROAD

F.A.U. RTE. 6145 (BROADWAY ST.)

S.W. FRONTAGE ROAD

STA. 17+00

STA. 23+00

MATCH LINE

MATCH LINE

ILLINOIS ST.

EXISTING R.O.W. LINE

EXISTING PERMANENT EASEMENT LINE

PIPE DRAIN 6" FOR OUTLET OF 6" PERFORATED DRAIN PIPE FROM MSE WALL

ELEC BOX

AC UNITS

GM

TBR

INV. 617.90

8" CMP

12"x10' SS (WMQ) @ 1.00%, TY. 2

12"x12' SS (WMQ) @ 1.00%, TY. 2

12"x246' SS (WMQ) @ +5.56%, TY. 2

12"x10' SS (WMQ) @ 1.00%, TY. 2

12"x12' SS (WMQ) @ 1.00%, TY. 2

12"x6' SS (RG) @ -0.50%, TY. 2 TB 3

6" PERFORATED DRAIN PIPE
SEE "TYPICAL SECTION"
MSE WALL FOR DETAILS (TYP.)

DRAINAGE STRUCTURE, TYPE 1
W/2, TYPE 20 FRAME & GRATE
15.79' RT.
STA. 17+10.00
LT. GRATE 631.06
RT. GRATE 631.06±*
N. INV. 626.89

INLET (A-11)
42.58' RT.
STA. 18+75.00
GRATE 623.05
INV. 618.88

TB 4 12"x14' SS (RG) @ -0.63%, TY. 2

INLET (B-1-CLID)
46.08' RT.
STA. 18+90.00
GRATE 623.34
E. INV. 618.60
N.W. INV. 618.80

TB 34 12"x58' SS (RG) @ -0.63%, TY. 2

INLET (A-11)
42.58' RT.
STA. 19+45.00
GRATE 622.44
INV. 618.27

TB 1 12"x4' SS (RG) @ -0.50%, TY. 2

M.H. 46.08' RT.
STA. 19+50.00
(A-1-CLID) 4.0' DIA.
GRATE 623.11
E. INV. 618.05
W. INV. 618.25
N.W. INV. 618.25

DRAINAGE STRUCTURE, TYPE 1
W/2, TYPE 20 FRAME & GRATE
15.79' RT.
STA. 19+60.00
LT. GRATE 645.27
RT. GRATE 645.27±*
N. INV. 641.10

TB 14 12"x24' SS (RG) @ -0.63%, TY. 2

INLET (A-3)
43.61' RT.
STA. 19+60.00
GRATE 622.34
INV. 618.19

TB 4 12"x14' SS (RG) @ -0.50%, TY. 2

INLET (B-3)
47.34' RT.
STA. 19+75.00
GRATE 622.40
S. INV. 617.93
N.W. INV. 618.13
N. INV. 618.13

12"x56' SS (RG) @ -0.63%, TY. 2 TB 31

M.H. 56.54' RT.
STA. 19+75.00
(A-1-CLID) 4.0' DIA.
GRATE 622.52
E. INV. 617.70
N.W. INV. 617.90

*ADJUST GRATE ELEVATION IN FIELD TO MATCH - P.C.C. 6" SIDEWALK, SPECIAL - PROFILE.

NOTE: FOR DRAINAGE PROFILE, SEE DRAINAGE PROFILE SHEETS.

F.A.U. RTE.	SECTION	COUNTY	TOTAL SHEETS	SHEET NO.
6145	01-00590-00-BR	LaSALLE	168	43
STA. 23+00		TO STA. 29+00		
FED. ROAD DIST. NO. 3	ILLINOIS	FEDERAL AID PROJECT		

CONTRACT NO. 87293

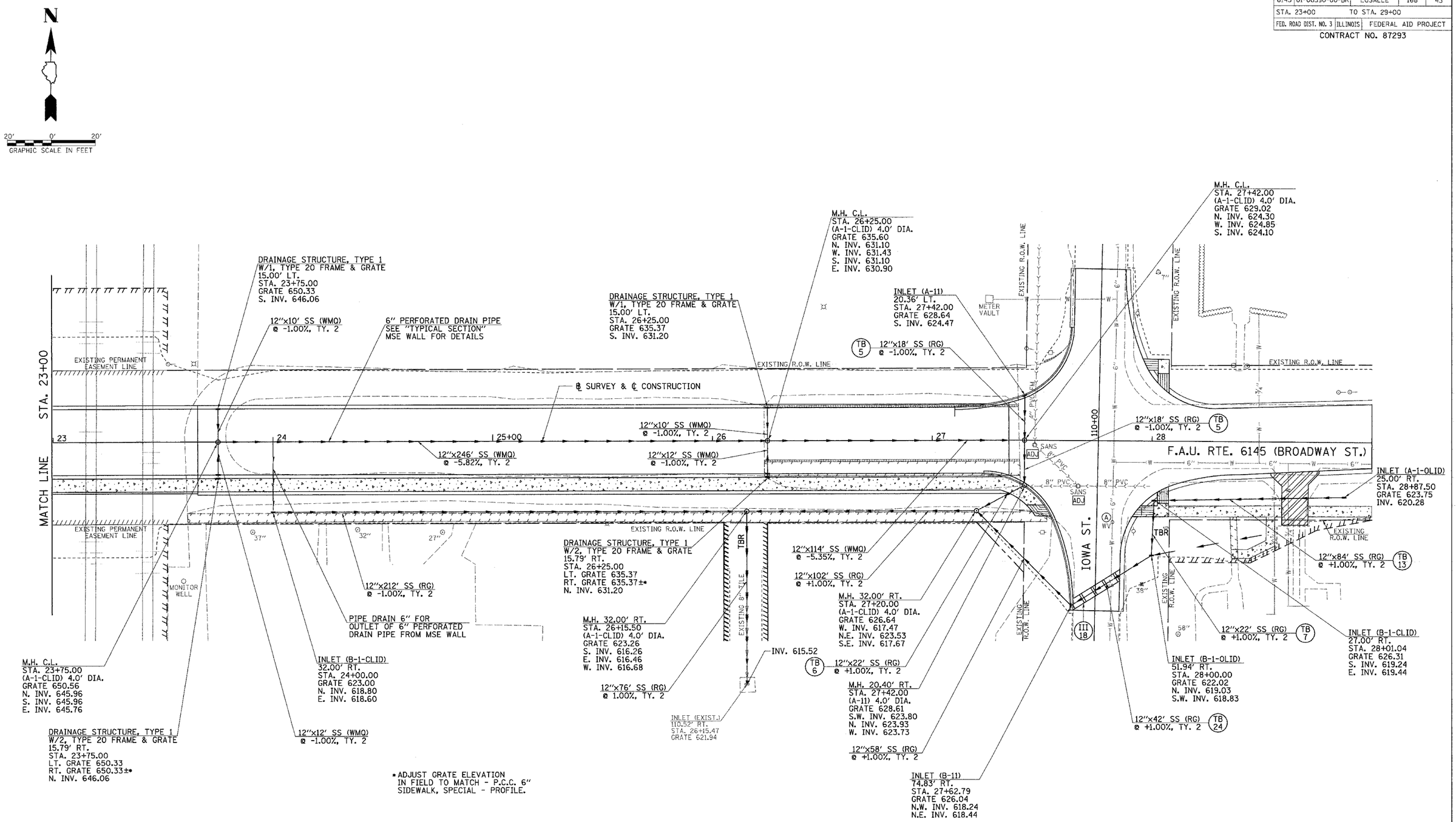

NOTE: FOR DRAINAGE PROFILE, SEE DRAINAGE PROFILE SHEETS.

2190D003

F.A.U. RTE. 6145 (BROADWAY ST.), DRAINAGE AND UTILITIES PLAN, STA. 23+00 TO STA. 29+00

RTE. NO.	SECTION	COUNTY	TOTAL SHEETS	SHEET NO.
N/A	01-00590-00-BR	LaSALLE	168	44
STA. 67+00	TO STA. 73+00			

CONTRACT NO. 87293

20' 0' 20'
GRAPHIC SCALE IN FEET

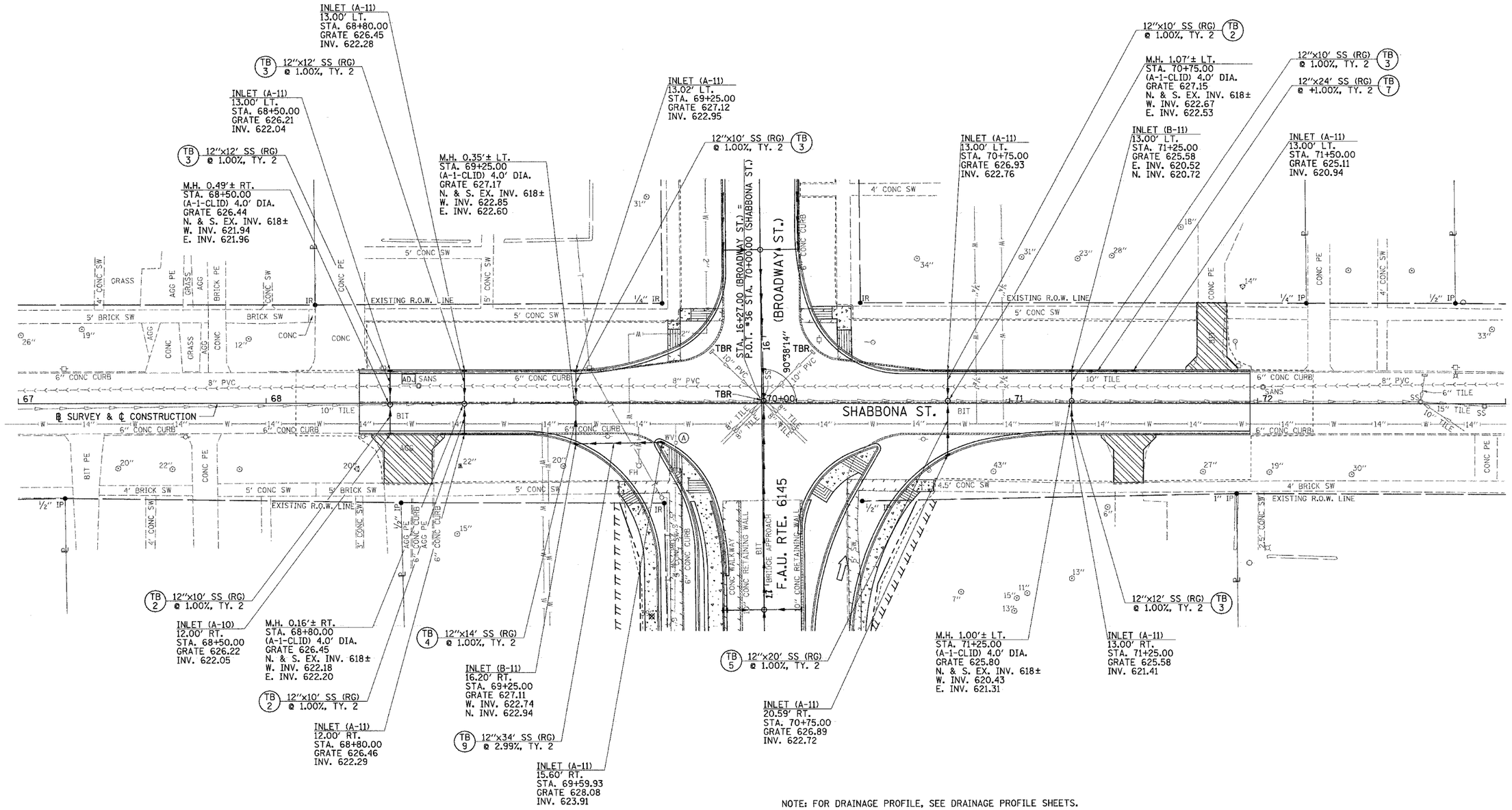

NOTE: FOR DRAINAGE PROFILE, SEE DRAINAGE PROFILE SHEETS.

F.A.U. RTE.	SECTION	COUNTY	TOTAL SHEETS	SHEET NO.
6145	01-00590-00-BR	LaSALLE	168	45
STA. 84+00	TO STA. 87+00			
FED. ROAD DIST. NO. 3	ILLINOIS	FEDERAL AID PROJECT		

CONTRACT NO. 87293

N

20' 0' 20'
GRAPHIC SCALE IN FEET

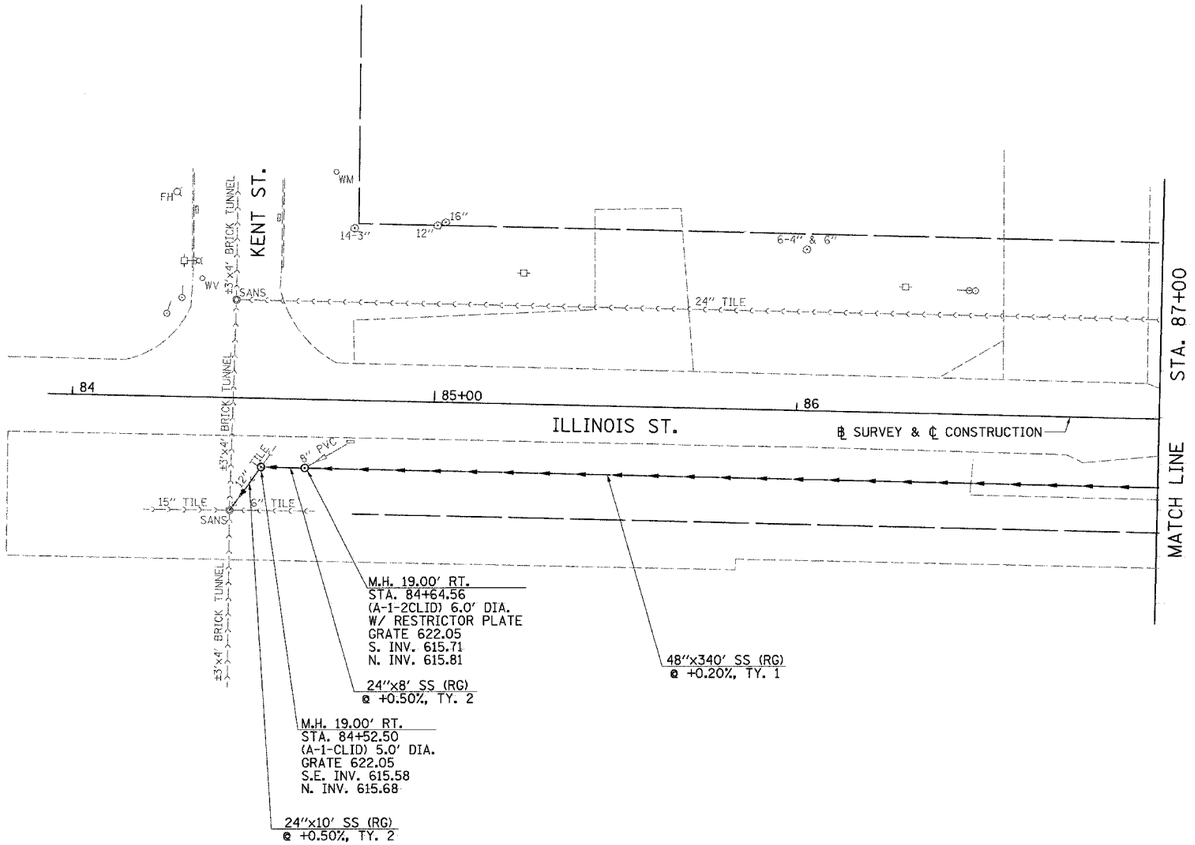

NOTES: FOR DRAINAGE PROFILE, SEE DRAINAGE PROFILE SHEETS.

ALL STORM SEWER AND SANITARY SEWER SHALL BE PVC STORM SEWER (WATER MAIN QUALITY).

F.A.U. RTE.	SECTION	COUNTY	TOTAL SHEETS	SHEET NO.
6145	01-00590-00-BR	LaSALLE	168	46
STA. 87+00		TO STA. 93+00		
FED. ROAD DIST. NO. 3	ILLINOIS	FEDERAL AID PROJECT		

CONTRACT NO. 87293

20' 0' 20'
GRAPHIC SCALE IN FEET

MATCH LINE

STA. 87+00

℄ SURVEY & ℄ CONSTRUCTION

ILLINOIS ST.

F.A.U. RTE. 6145 (BROADWAY ST.)

EXISTING R.O.W. LINE

EXISTING PERMANENT EASEMENT LINE

INLET (A-1)
25.00' LT.
STA. 88+55.00
GRATE 622.00
INV. 618.73

(TB 7) 12"x34' SS (RG) @ +1.00%, TY. 1

INLET (B-3)
15.00' LT.
STA. 88+20.00
GRATE 622.36
E. INV. 618.19
N.W. INV. 618.39

(TB 7) 12"x26' SS (RG) @ +1.00%, TY. 2

SAN. M.H. 27.65' LT.
STA. 89+30.00
(A-1-CLID) 5.0' DIA.
GRATE 622.60
N.E. INV. 612.66
S. INV. 612.66 (EXIST.)

3' CONC SW

(II 14) 12"x8' SS (RG) @ +1.00%, TY. 2

12"x8' SS (RG) @ +1.00%, TY. 2

(IV 29) (IV 33) (IV 64) (III 20) (IV 31) (II 12)

24"x72' SAN. S. (TB 111) @ +0.18%, TY. 2

GM
AC UNITS

SAN. M.H. 22.60' LT. (EXIST.)
STA. 90+63.15
GRATE 623.17
N. INV. 612.92 (EXIST.)
S.E. INV. 612.92

INLET (A-3)
23.00' LT.
STA. 91+08.00
GRATE 622.24
INV. 618.97

12"x12' SS (RG) @ -0.44%, TY. 1 (TB 2)

INLET (EXIST.)
24.53' LT.
STA. 91+74.63
GRATE 621.94
INV. 618.26
MINE DRAIN

(TB 2) 12"x8' SS (RG) @ -0.70%, TY. 1

M.H. 15.00' LT.
STA. 91+70.00
(A-10) 4.0' DIA.
GRATE 622.12
N.W. INV. 618.32
E. INV. 618.52
N. INV. 618.52
S. INV. 618.52

M.H. 15.00' LT.
STA. 91+20.00
(A-10) 4.0' DIA.
GRATE 622.30
N. INV. 618.72
E. INV. 618.92
S.W. INV. 618.92

12"x14' SS (RG) @ +0.44%, TY. 1 (TB 3)

INLET (A-10)
15.00' LT.
STA. 91+85.00
GRATE 622.28
INV. 618.57

12"x48' SS (RG) @ -0.44%, TY. 1 (TB 10)

(II 11)

(TB 7) 12"x36' SS (RG) @ 0.44%, TY. 1

M.H. 19.00' RT.
STA. 88+10.00
(A-1-CLID) 6.0' DIA.
GRATE 622.46
S. INV. 616.49
N. INV. 616.59
N.W. INV. 617.68

M.H. 13.75' RT.
STA. 88+20.00
(A-10) 4.0' DIA.
GRATE 622.35
S.E. INV. 617.79
W. INV. 617.94

24"x76' SS (RG) @ +0.32%, TY. 2

M.H. 19.00' RT.
STA. 88+90.00
(A-1-CLID) 5.0' DIA.
GRATE 622.72
S. INV. 616.84
N. INV. 616.94
N.W. INV. 618.35

INLET (A-10)
13.75' RT.
STA. 89+00.00
GRATE 622.59
INV. 618.42

24"x46' SS (RG) @ +0.29%, TY. 2

M.H. 19.00' RT.
STA. 89+40.00
(A-1-CLID) 5.0' DIA.
GRATE 622.79
S. INV. 617.16
N. INV. 617.26
W. INV. 617.36

(TB 51) 24"x36' SAN. S. @ +0.19%, TY. 2

SAN. M.H. C.L.
STA. 89+58.00
(A-1-CLID) 5.0' DIA.
GRATE 623.09
N. INV. 612.73
S.W. INV. 612.73

18"x98' SS (RG) @ +0.40%, TY. 2

24"x32' SAN. S. (TB 43) @ +0.19%, TY. 2

SAN. M.H. C.L.
STA. 90+34.00
(A-1-CLID) 5.0' DIA.
GRATE 623.04
N.W. INV. 612.86
S. INV. 612.86

M.H. 23.50' RT.
STA. 90+40.00
(A-1-CLID) 4.0' DIA.
GRATE 623.07
S. INV. 617.65
W. INV. 617.75

INLET (A-10)
23.00' RT.
STA. 91+85.00
GRATE 621.96
INV. 618.92

12"x14' SS (RG) @ +0.44%, TY. 1 (TB 2)

INLET (B-10)
23.00' RT.
STA. 91+70.00
GRATE 621.97
W. INV. 618.67
N. INV. 618.87

12"x36' SS (RG) @ 0.44%, TY. 1 (TB 7)

INLET (A-10)
23.00' RT.
STA. 91+20.00
GRATE 622.16
INV. 619.08

NOTE: FOR DRAINAGE PROFILE, SEE DRAINAGE PROFILE SHEETS.

ILLINOIS ST., DRAINAGE AND UTILITIES PLAN, STA. 87+00 TO STA. 93+00

F.A.U. RTE.	SECTION	COUNTY	TOTAL SHEETS	SHEET NO.
6145	01-00590-00-BR	LaSALLE	168	47
STA. 11+50	TO STA. 23+00			
FED. ROAD DIST. NO. 3	ILLINOIS	FEDERAL AID PROJECT		

CONTRACT NO. 87293

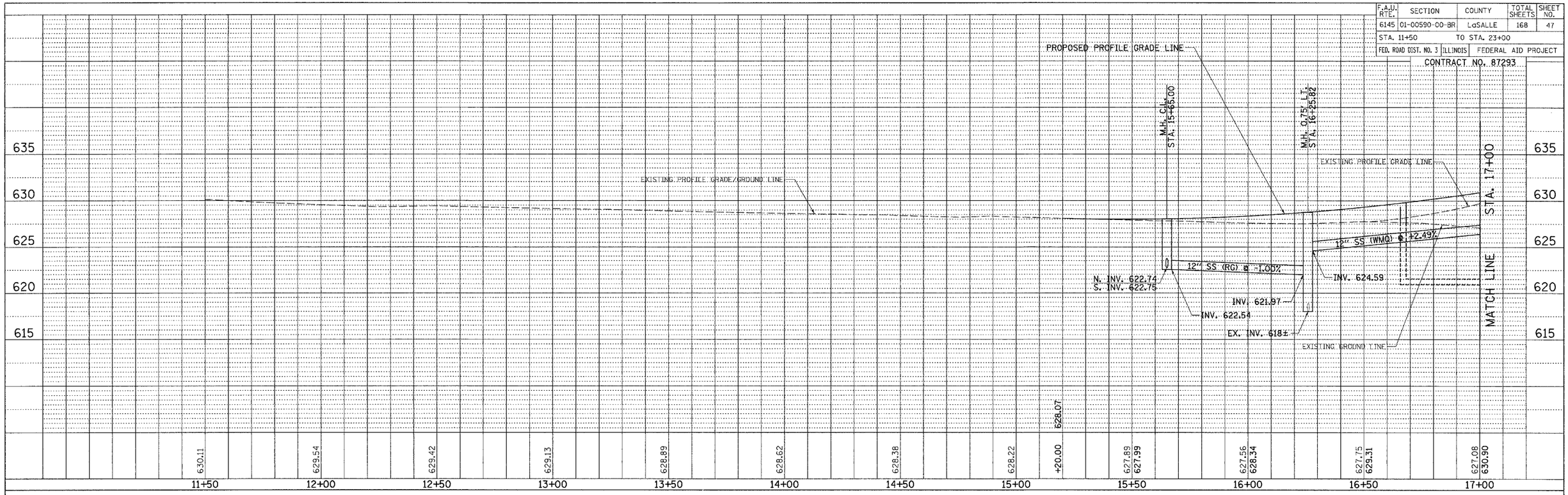

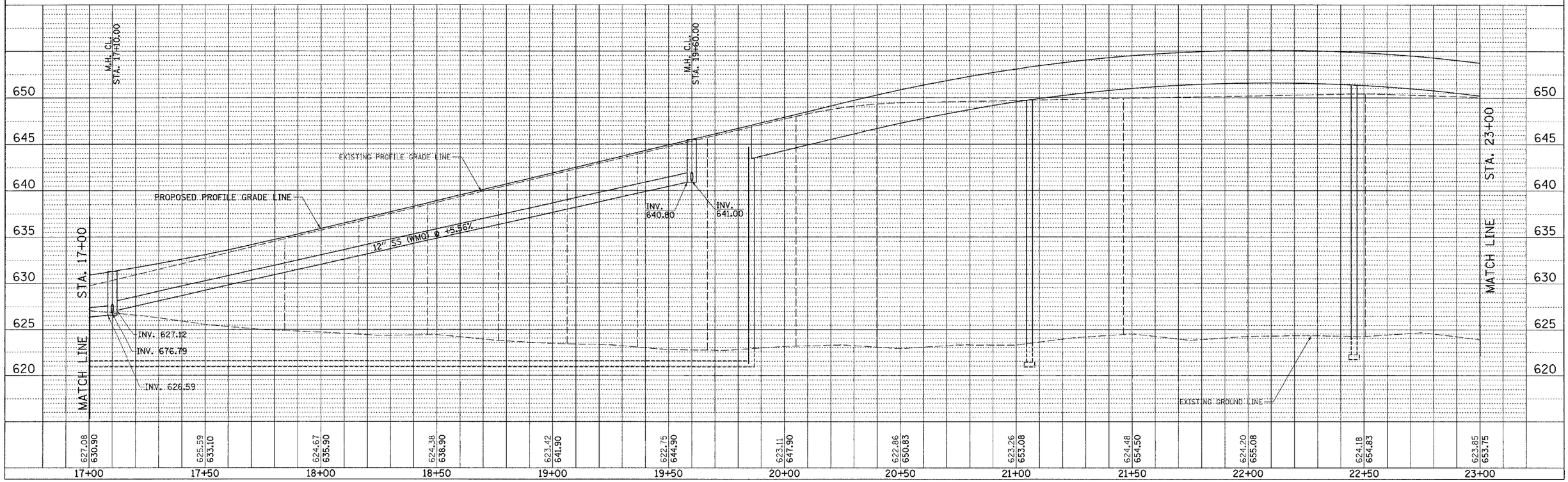

2190D007

F.A.U. RTE. 6145 (BROADWAY ST.), DRAINAGE PROFILE, STA. 11+50 TO STA. 23+00

F.A.U. RTE.	SECTION	COUNTY	TOTAL SHEETS	SHEET NO.
6145	01-00590-00-BR	LaSALLE	168	48
STA. 23+00	TO STA. 29+00			
FED. ROAD DIST. NO. 3	ILLINOIS	FEDERAL AID PROJECT		

CONTRACT NO. 87293

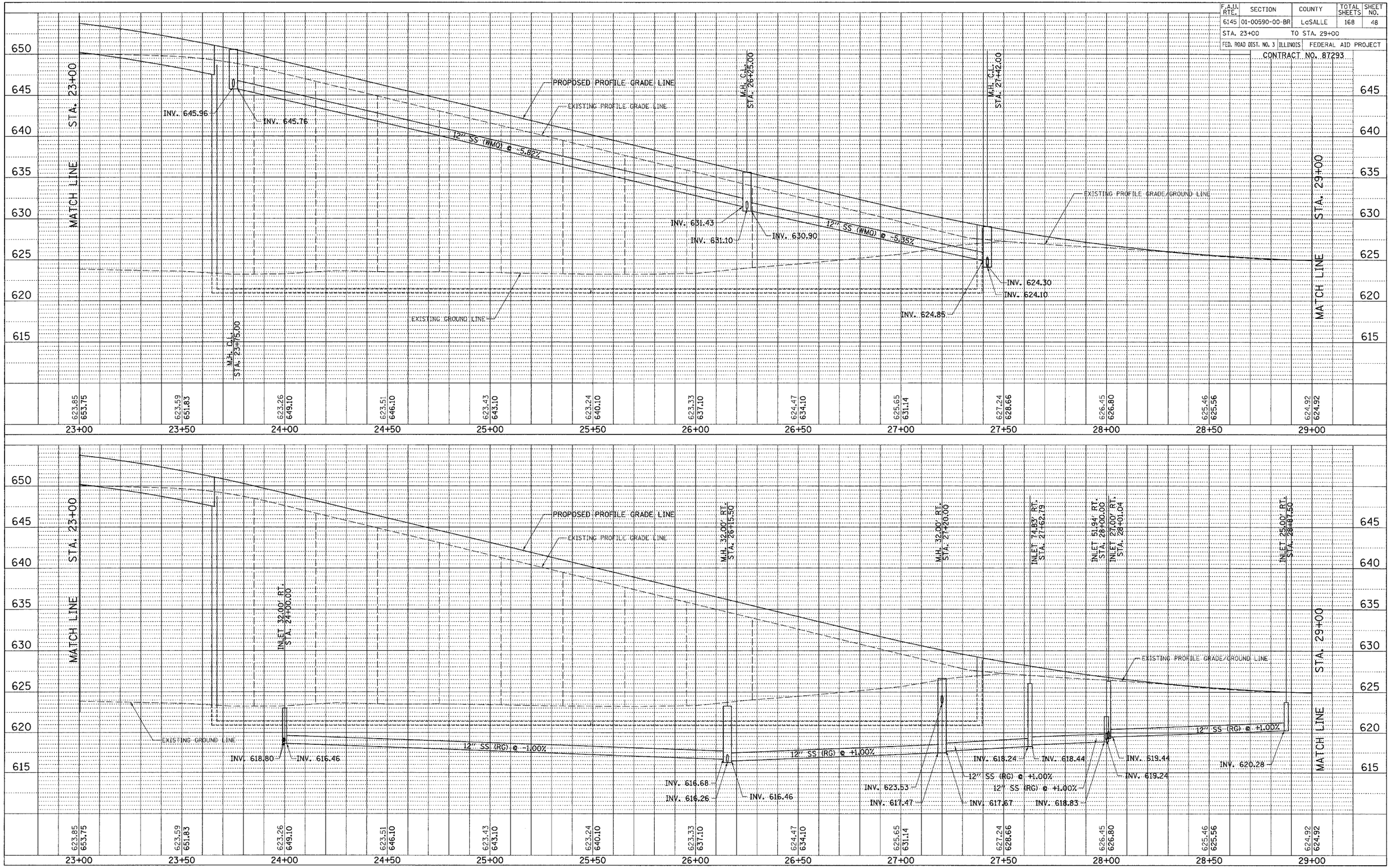

2190D008

F.A.U. RTE. 6145 (BROADWAY ST.), DRAINAGE PROFILE, STA. 23+00 TO STA. 29+00

F.A.U. RTE.	SECTION	COUNTY	TOTAL SHEETS	SHEET NO.
6145	01-00590-00-BR	LaSALLE	168	49
STA. 15+00	TO STA. 21+00			
FED. ROAD DIST. NO. 3	ILLINOIS	FEDERAL AID PROJECT		

CONTRACT NO. 87293

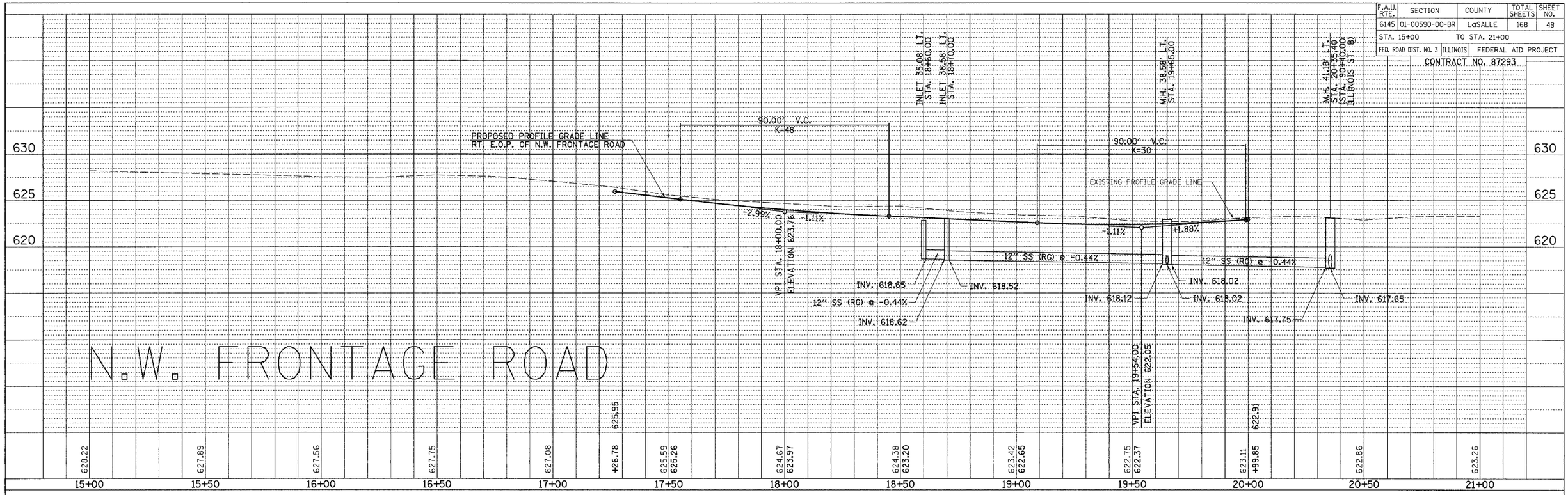

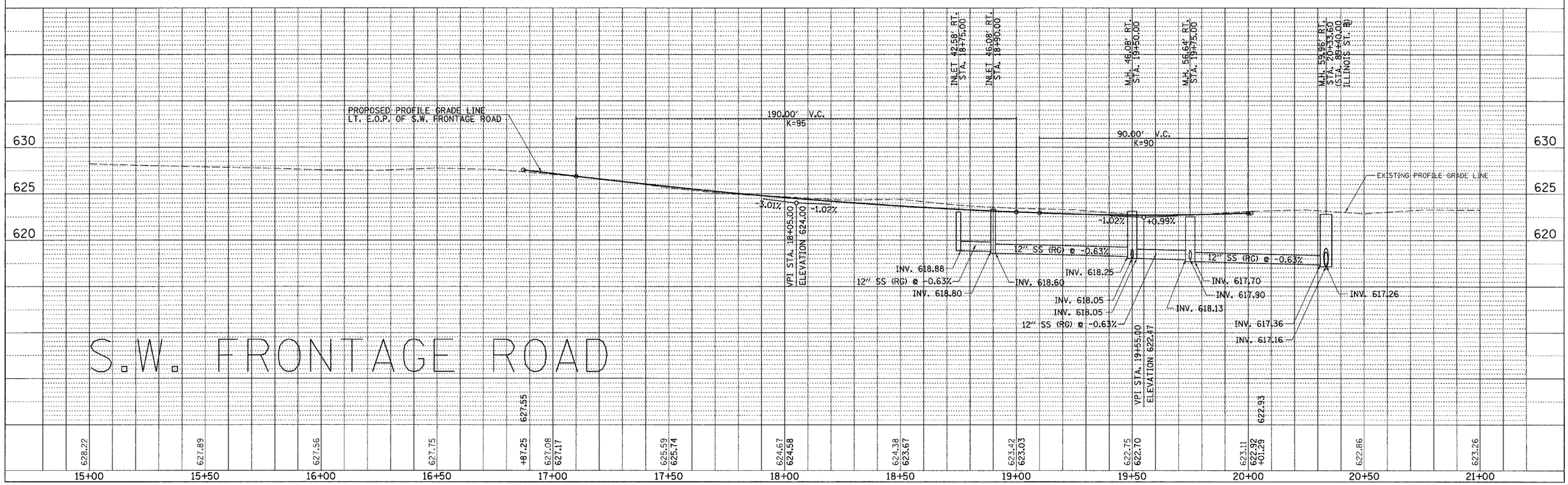

2190D009

F.A.U. RTE. 6145 (BROADWAY ST.), N.W. & S.W. FRONTAGE ROADS, DRAINAGE PROFILES, STA. 15+00 TO STA. 21+00

RTE. NO.	SECTION	COUNTY	TOTAL SHEETS	SHEET NO.
N/A	01-00590-00-BR	LaSALLE	168	50
STA. 67+00	TO STA. 73+00			

CONTRACT NO. 87293

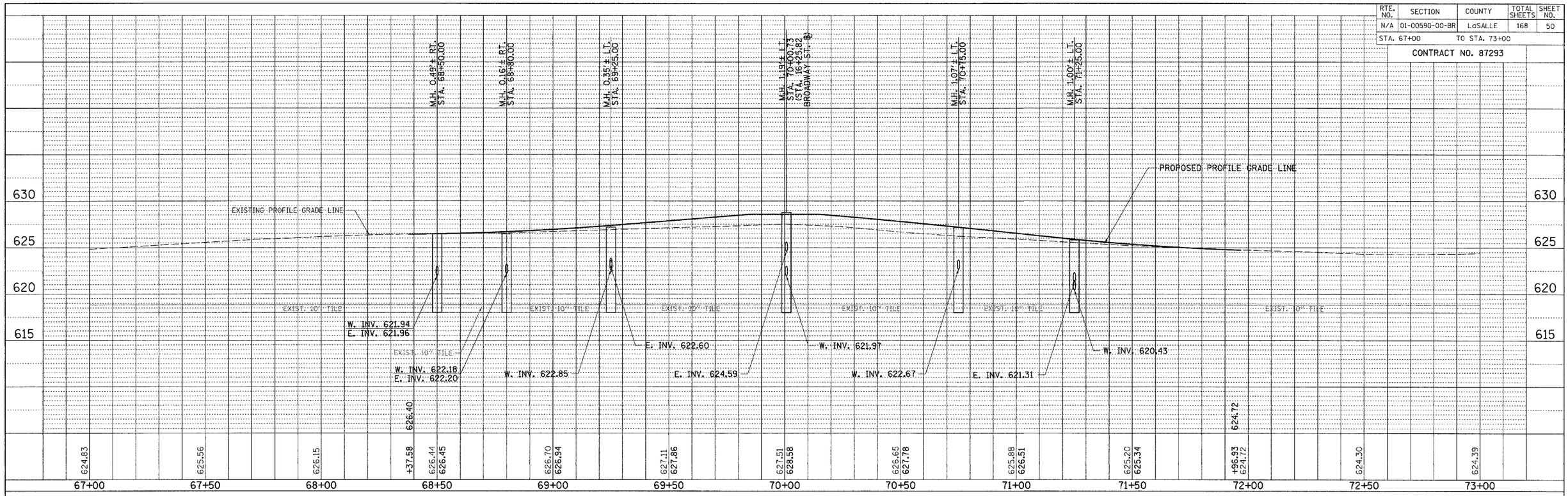

2190D010

SHABBONA ST., DRAINAGE PROFILE, STA. 67+00 TO STA. 73+00

F.A.U. RTE.	SECTION	COUNTY	TOTAL SHEETS	SHEET NO.
6145	01-00590-00-BR	LaSALLE	168	51
STA. 84+00	TO STA. 93+00			
FED. ROAD DIST. NO. 3	ILLINOIS	FEDERAL AID PROJECT		

CONTRACT NO. 87293

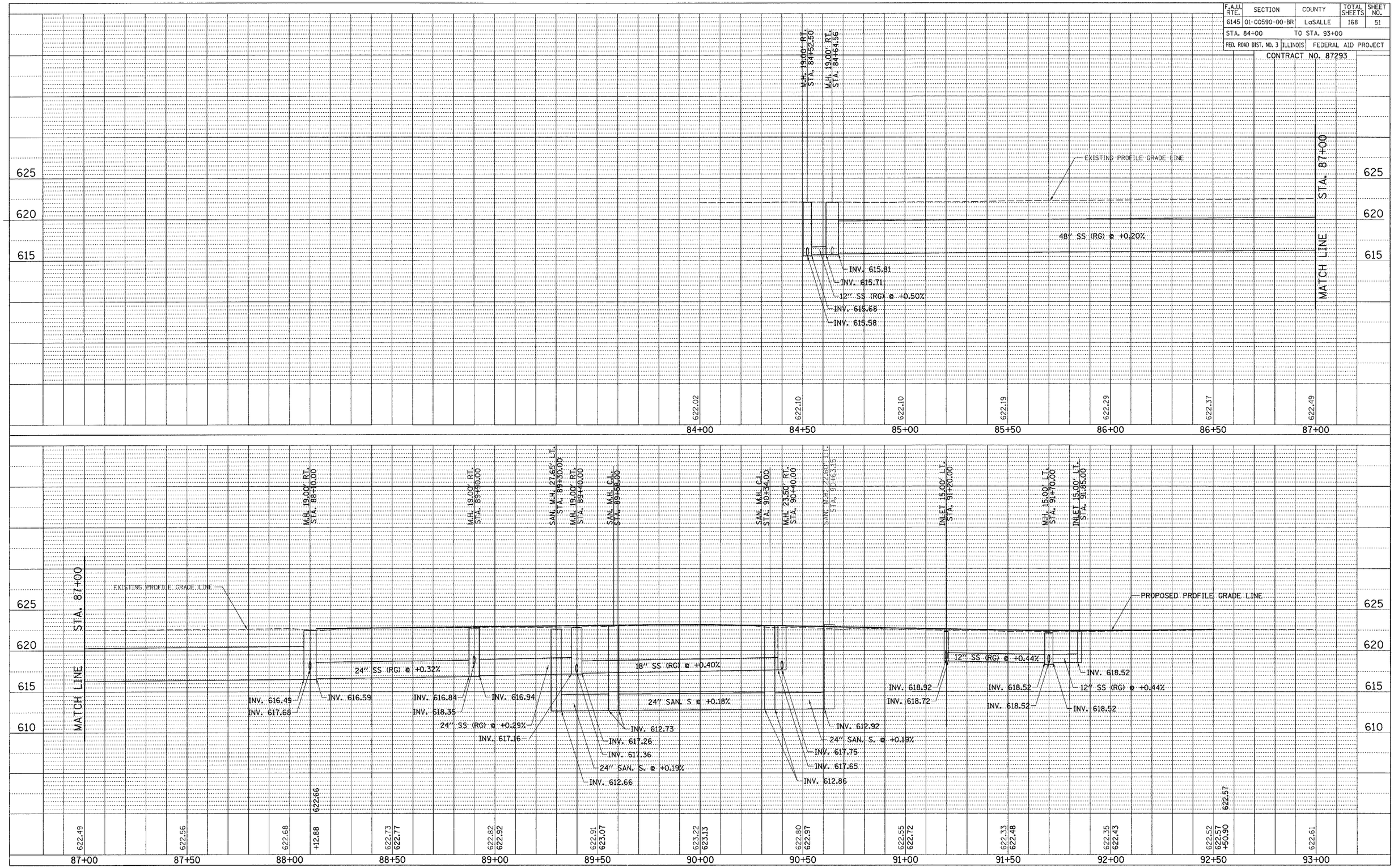

2190D011

ILLINOIS ST., DRAINAGE PROFILE, STA. 84+00 TO STA. 93+00

RECORDED AS DOCUMENT NO. _____ FLAT FILE

F.A.U. RTE.	SECTION	COUNTY	TOTAL SHEETS	SHEET NO.
6145	01-00590-00-BR	LaSALLE	168	52
STA. 15+00	TO STA. 21+00			
FED. ROAD DIST. NO. 3	ILLINOIS	FEDERAL AID PROJECT		

SEC 25, T 31 N, R 3 E, 3RD PM

PARCEL NO. 2TE1		
COURSE	BEARING	DISTANCE
POB-7	N 0°41'59" E	8.00'
7-8	S 64°10'06" E	64.26'
8-9	N 80°54'35" W	25.32'
9-POB	N 64°05'26" W	36.62'

PARCEL NO. 2TE2		
COURSE	BEARING	DISTANCE
POB-10	N 0°00'00" E	8.00'
10-11	N 90°00'00" E	25.00'
11-12	S 0°00'00" W	8.00'
12-POB	S 90°00'00" W	25.00'

PARCEL NO. 6TE		
COURSE	BEARING	DISTANCE
POB-27	N 0°00'00" E	10.72'
27-28	N 89°24'15" E	25.00'
28-29	S 0°00'00" W	10.98'
29-POB	S 90°00'00" W	25.00'

PARCEL NO. 1TE		
COURSE	BEARING	DISTANCE
POB-1	N 71°05'30" E	24.04'
1-2	N 90°00'00" E	77.33'
2-3	S 0°34'50" W	19.00'
3-4	S 90°00'00" W	12.14'
4-5	N 0°00'00" E	9.00'
5-6	S 90°00'00" W	87.77'
6-POB	N 0°34'50" E	2.21'

PARCEL NO. 3TE		
COURSE	BEARING	DISTANCE
POB-13	N 90°00'00" E	50.00'
13-14	S 0°34'50" W	19.00'
14-15	S 90°00'00" W	16.14'
15-16	N 0°00'00" E	9.00'
16-17	S 90°00'00" W	32.00'
17-18	S 0°00'00" W	9.00'
18-3	S 90°00'00" W	1.86'
3-POB	N 0°34'50" E	19.00'

PARCEL NO. 4TE		
COURSE	BEARING	DISTANCE
POB-19	N 90°00'00" E	50.00'
19-20	S 0°34'50" W	5.00'
20-21	S 90°00'00" W	33.28'
21-22	S 0°00'00" W	14.00'
22-14	S 90°00'00" W	16.86'
14-POB	N 0°34'50" E	19.00'

PARCEL NO. 5TE		
COURSE	BEARING	DISTANCE
POB-23	N 90°00'00" E	40.00'
23-24	S 0°34'50" W	16.50'
24-25	S 90°00'00" W	26.17'
25-26	N 0°00'00" E	11.50'
26-20	S 90°00'00" W	13.72
20-POB	N 0°34'50" E	5.00'

PARCEL NO. 7TE		
COURSE	BEARING	DISTANCE
POB-30	N 90°00'00" E	45.25'
30-31	S 67°17'41" E	15.92'
31-32	S 0°34'50" W	5.86'
32-33	S 90°00'00" W	56.21'
33-34	S 0°00'00" W	4.50'
34-24	S 90°00'00" W	3.83
24-POB	N 0°34'50" E	16.50'

CERTIFICATION OF SURVEY

STATE OF ILLINOIS

COUNTY OF LaSALLE

I, TIMOTHY C. QUIGG, HEREBY CERTIFY THAT I AM A PROFESSIONAL LAND SURVEYOR OF THE STATE OF ILLINOIS, THAT THE SURVEY OF PROPOSED F.A.U. 6145 (BROADWAY STREET) WAS MADE BY ME OR UNDER MY DIRECTION AND THAT THE SURVEY IS TRUE AND COMPLETE AS SHOWN TO THE BEST OF MY KNOWLEDGE AND BELIEF, THAT ALL MONUMENTS AND MARKS ARE OF THE CHARACTER AND OCCUPY THE POSITION SHOWN THEREON, AND ARE SUFFICIENT TO ENABLE THE SURVEY TO BE RETRACED.

DATE: 3/1/06 _____ Timothy C. Quigg
ILLINOIS PROFESSIONAL LAND SURVEYOR NUMBER 3063

TIMOTHY C. QUIGG 3063 PROFESSIONAL LAND SURVEYOR STATE OF ILLINOIS JACKSONVILLE, IL

LICENSE EXPIRES 11/30/06

AREAS SHOWN IN SQUARE FEET

PARCEL NO.	OWNER	AREA OF WHOLE	ROW REQUIRED	AREA REMAIN	AREA OF EASEMENT	EASEMENT PURPOSE
1	GEORGE A. ROBERTSON & BETHEL J. ROBERTSON	10,600 SF	1,098 SF	9,502 SF	1,021 SF	SIDEWALK AND ENTRANCE RE-CONSTRUCTION
2	LOGAN H. VISSERING & DORIS J. VISSERING	22,500 SF	734 SF	21,766 SF	TE1 367 SF TE2 200 SF	TE1 = GRADING TE2 = ENTRANCE RE-CONSTRUCTION
3	CLIFTON W. BUSH II & STEPHANIE LYNN BUSH	7,075 SF	504 SF	6,571 SF	662 SF	SIDEWALK AND ENTRANCE RE-CONSTRUCTION
4	FRED HARDING & EARLA HARDING	7,075 SF	503 SF	6,572 SF	485 SF	SIDEWALK AND ENTRANCE RE-CONSTRUCTION
12	MELISSA L. SABOL	7,200 SF	97 SF	7,103 SF	N/A	N/A
5	EDWARD M. SOPKO & PATRICIA R. SOPKO	5,660 SF	402 SF	5,258 SF	502 SF	SIDEWALK AND ENTRANCE RE-CONSTRUCTION
6	SCI CORPORATION	14,400 SF	196 SF	14,204	271 SF	SIDEWALK AND ENTRANCE RE-CONSTRUCTION
7	GERMAN MAGANA	8,490 SF	648 SF	7,842 SF	692 SF	SIDEWALK AND ENTRANCE RE-CONSTRUCTION

20' 0' 20'
GRAPHIC SCALE IN FEET

NOTE : ALL BEARINGS ARE ON AN ASSUMED BASIS.

REVISION	
DATE	DESCRIPTION

ILLINOIS DEPT. OF TRANSPORTATION
RIGHT OF WAY PLAT

ROUTE: F.A.U. RTE. 6145 (BROADWAY STREET)
SECTION : 01-00590-00-BR
COUNTY : LaSALLE
JOB# PROJECT#
SEC 25 T 31 N, R 3 E OF 3RD P.M.
STA 15+00 TO STA 21+00
DRAWN SRH CHECKED CAY, TCQ
SCALE: 1"=20' SHEET NO. 1 OF 4

2190R001

F.A.U. RTE. 6145 (BROADWAY ST.), RIGHT OF WAY PLAT, STA. 15+00 TO STA. 21+00

V:\2190\215sh01.dgn 03/01/2006 11:10:0 AM

RECORDED AS DOCUMENT NO. _____ FLAT FILE

F.A.U. RTE.	SECTION	COUNTY	TOTAL SHEETS	SHEET NO.
6145	01-00590-00-BR	LaSALLE	168	53
STA. 21+00	TO STA. 27+00			
FED. ROAD DIST. NO. 3	ILLINOIS	FEDERAL AID PROJECT		

SEC 25, T 31 N, R 3 E, 3RD PM

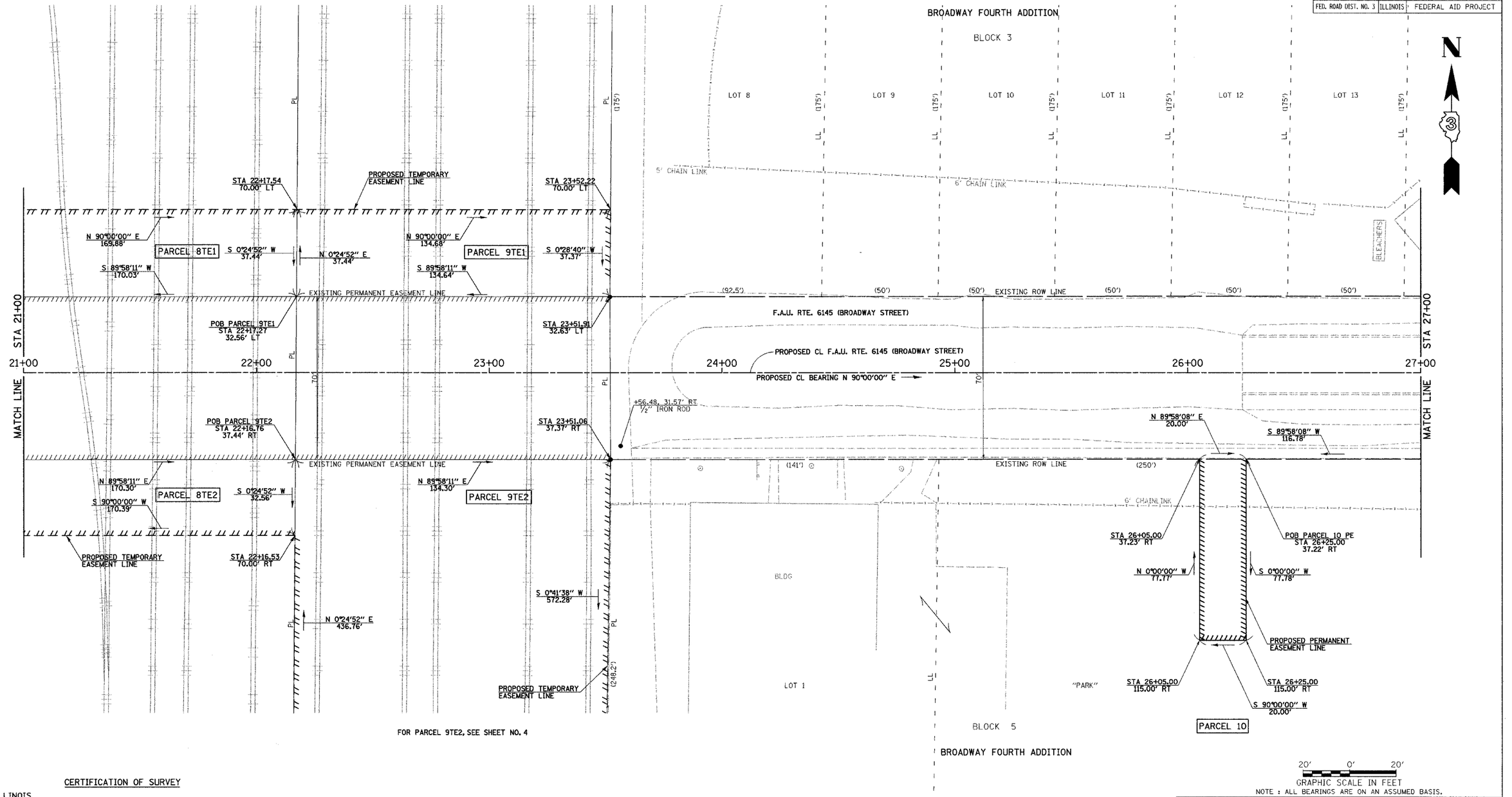

FOR PARCEL 9TE2, SEE SHEET NO. 4

20' 0' 20'
GRAPHIC SCALE IN FEET

NOTE : ALL BEARINGS ARE ON AN ASSUMED BASIS.

CERTIFICATION OF SURVEY

STATE OF ILLINOIS

COUNTY OF LaSALLE

I, TIMOTHY C. QUIGG, HEREBY CERTIFY THAT I AM A PROFESSIONAL LAND SURVEYOR OF THE STATE OF ILLINOIS, THAT THE SURVEY OF PROPOSED F.A.U. 6145 (BROADWAY STREET) WAS MADE BY ME OR UNDER MY DIRECTION AND THAT THE SURVEY IS TRUE AND COMPLETE AS SHOWN TO THE BEST OF MY KNOWLEDGE AND BELIEF, THAT ALL MONUMENTS AND MARKS ARE OF THE CHARACTER AND OCCUPY THE POSITION SHOWN THEREON, AND ARE SUFFICIENT TO ENABLE THE SURVEY TO BE RETRACED.

DATE: 3/1/06 Timothy C. Quigg
ILLINOIS PROFESSIONAL LAND SURVEYOR NUMBER 3063

TIMOTHY C. QUIGG 3063 PROFESSIONAL LAND SURVEYOR STATE OF ILLINOIS JACKSONVILLE, IL

LICENSE EXPIRES 11/30/06

AREAS SHOWN IN SQUARE FEET

PARCEL NO.	OWNER	AREA OF WHOLE	ROW REQUIRED	AREA REMAIN	AREA OF EASEMENT	EASEMENT PURPOSE
8	BURLINGTON NORTHERN AND SANTA FE RAILWAY COMPANY	N/A	N/A	N/A	TE1 6,371 SF TE2 5,538 SF TOTAL = 11,909 SF	GRADING
9	SB WAREHOUSING, INC.	N/A	N/A	N/A	TE1 5,037 SF TE2 94,730 SF TOTAL = 99,767 SF	GRADING & BRIDGE ACCESS
10	CITY OF STREATOR	136,180	249	135,931	PE 1,556 SF	STORM SEWER

REVISION DATE	REVISION DESCRIPTION

ILLINOIS DEPT. OF TRANSPORTATION
RIGHT OF WAY PLAT

ROUTE: F.A.U. RTE. 6145 (BROADWAY STREET)
SECTION : 01-00590-00-BR
COUNTY : LaSALLE
JOB# PROJECT#
SEC 25 T 31 N, R 3 E OF 3RD P.M.
STA 21+00 TO STA 27+00
DRAWN SRH CHECKED CAY, TCQ
SCALE: 1"=20' SHEET NO. 2 OF 4

2190R002

V:\2190\plat\2190r002.dgn 3/01/2006 11:15:27 AM

RECORDED AS DOCUMENT NO. _____ FLAT FILE _____

F.A.U. RTE.	SECTION	COUNTY	TOTAL SHEETS	SHEET NO.
6145	01-00590-00-BR	LaSALLE	168	54
STA. 27+00		TO STA. 33+00		
FED. ROAD DIST. NO. 3	ILLINOIS	FEDERAL AID PROJECT		

SEC 25, T 31 N, R 3 E, 3RD PM

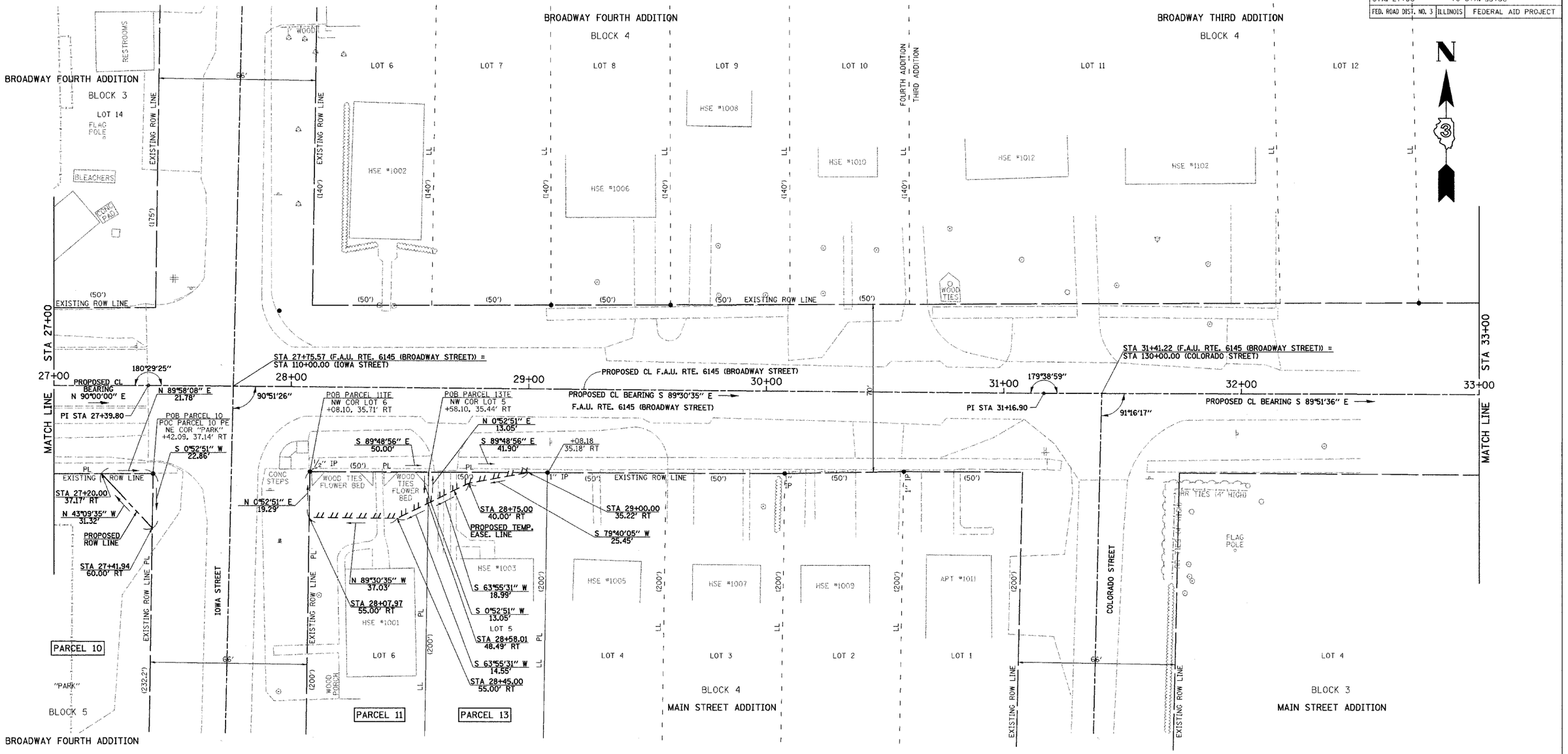

CERTIFICATION OF SURVEY

STATE OF ILLINOIS

COUNTY OF LaSALLE

I, TIMOTHY C. QUIGG, HEREBY CERTIFY THAT I AM A PROFESSIONAL LAND SURVEYOR OF THE STATE OF ILLINOIS, THAT THE SURVEY OF PROPOSED F.A.U. 6145 (BROADWAY STREET) WAS MADE BY ME OR UNDER MY DIRECTION AND THAT THE SURVEY IS TRUE AND COMPLETE AS SHOWN TO THE BEST OF MY KNOWLEDGE AND BELIEF, THAT ALL MONUMENTS AND MARKS ARE OF THE CHARACTER AND OCCUPY THE POSITION SHOWN THEREON, AND ARE SUFFICIENT TO ENABLE THE SURVEY TO BE RETRACED.

DATE: 3/1/06 Timothy C. Quigg
ILLINOIS PROFESSIONAL LAND SURVEYOR NUMBER 3063

TIMOTHY C. QUIGG 3063 PROFESSIONAL LAND SURVEYOR STATE OF ILLINOIS JACKSONVILLE, IL

LICENSE EXPIRES 11/30/06

AREAS SHOWN IN SQUARE FEET

PARCEL NO.	OWNER	AREA OF WHOLE	ROW REQUIRED	AREA REMAIN	AREA OF EASEMENT	EASEMENT PURPOSE
11	JOHN P. HAAG	N/A	N/A	N/A	929 SF	SIDEWALK RE-CONSTRUCTION AND GRADING
13	SERGIO ALVARADO & DEBBIE ALVARADO	N/A	N/A	N/A	208 SF	SIDEWALK RE-CONSTRUCTION AND GRADING

20' 0' 20'
GRAPHIC SCALE IN FEET
NOTE : ALL BEARINGS ARE ON AN ASSUMED BASIS.

REVISION	
DATE	DESCRIPTION

ILLINOIS DEPT. OF TRANSPORTATION
RIGHT OF WAY PLAT

ROUTE: F.A.U. RTE. 6145 (BROADWAY STREET)
SECTION : 01-00590-00-BR
COUNTY : LaSALLE
JOB# PROJECT#
SEC 25 T 31 N, R 3 E OF 3RD P.M.
STA 27+00 TO STA 33+00
DRAWN SRH CHECKED CAY, TCQ
SCALE: 1"=20' SHEET NO. 3 OF 4

2190R003

F.A.U. RTE. 6145 (BROADWAY ST.), RIGHT OF WAY PLAT, STA. 27+00 TO STA. 33+00

RECORDED AS DOCUMENT NO. _____ FLAT FILE

F.A.U. RTE.	SECTION	COUNTY	TOTAL SHEETS	SHEET NO.
6145	01-00590-00-BR	LaSALLE	168	55
STA. 21+00	TO STA. 27+00			
FED. ROAD DIST. NO. 3	ILLINOIS	FEDERAL AID PROJECT		

SEC 25, T 31 N, R 3 E, 3RD PM

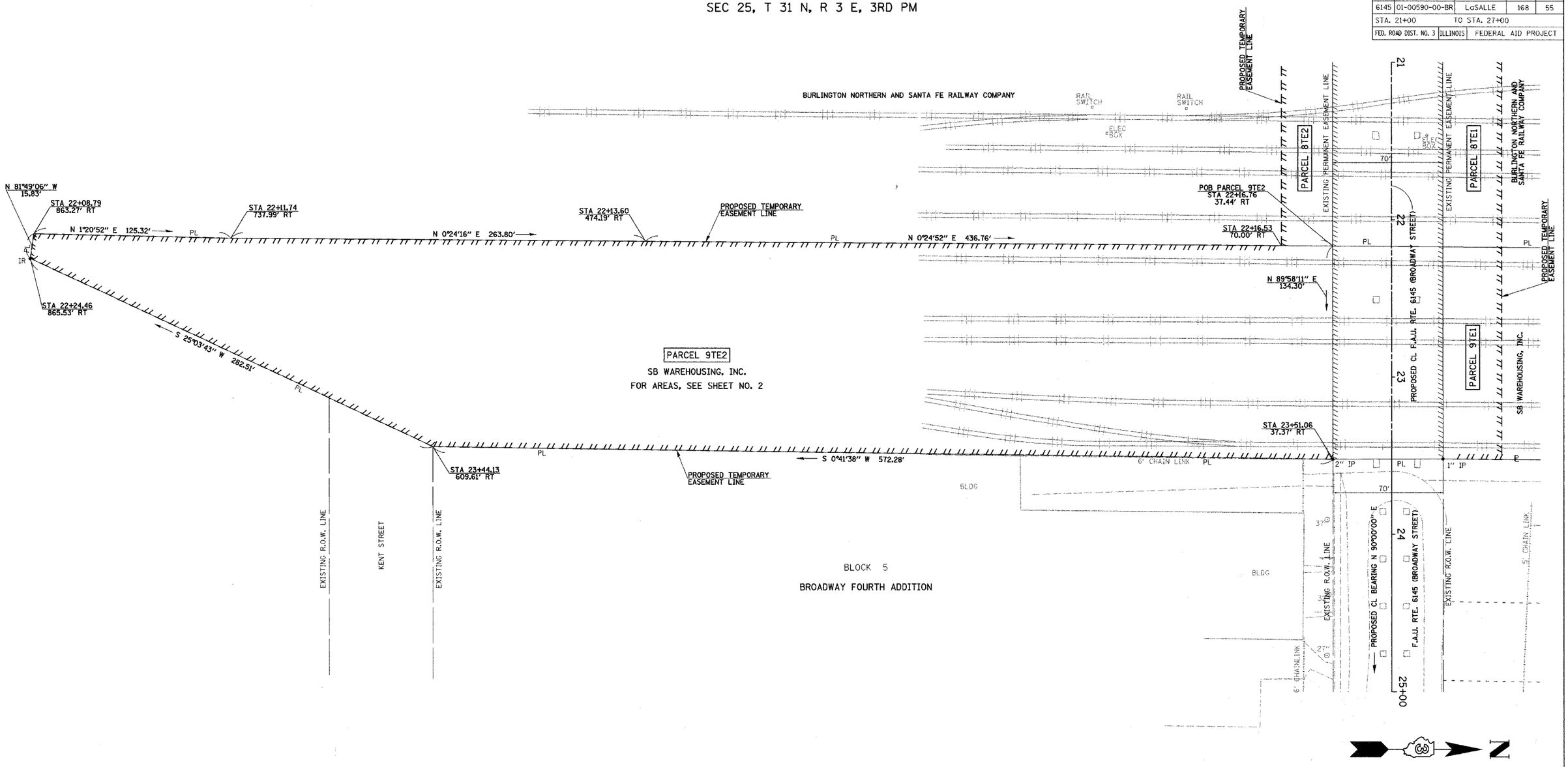

NOTE : ALL BEARINGS ARE ON AN ASSUMED BASIS.

CERTIFICATION OF SURVEY

STATE OF ILLINOIS

COUNTY OF LaSALLE

I, TIMOTHY C. QUIGG, HEREBY CERTIFY THAT I AM A PROFESSIONAL LAND SURVEYOR OF THE STATE OF ILLINOIS, THAT THE SURVEY OF PROPOSED F.A.U. 6145 (BROADWAY STREET) WAS MADE BY ME OR UNDER MY DIRECTION AND THAT THE SURVEY IS TRUE AND COMPLETE AS SHOWN TO THE BEST OF MY KNOWLEDGE AND BELIEF, THAT ALL MONUMENTS AND MARKS ARE OF THE CHARACTER AND OCCUPY THE POSITION SHOWN THEREON, AND ARE SUFFICIENT TO ENABLE THE SURVEY TO BE RETRACED.

DATE: 3/1/06 _____
ILLINOIS PROFESSIONAL LAND SURVEYOR NUMBER 3063

TIMOTHY C. QUIGG 3063 PROFESSIONAL LAND SURVEYOR STATE OF ILLINOIS JACKSONVILLE, IL

LICENSE EXPIRES 11/30/06

REVISION DATE	REVISION DESCRIPTION

ILLINOIS DEPT. OF TRANSPORTATION
RIGHT OF WAY PLAT

ROUTE: F.A.U. RTE. 6145 (BROADWAY STREET)
SECTION : 01-00590-00-BR
COUNTY : LaSALLE
JOB# PROJECT#
SEC 25 T 31 N, R 3 E OF 3RD P.M.
STA 21+00 TO STA 27+00
DRAWN SRH CHECKED CAY, TCQ
SCALE: 1"=20' SHEET NO. 4 OF 4

2190R004

F.A.U. RTE. 6145 (BROADWAY ST.), RIGHT OF WAY PLAT, STA. 21+00 TO STA. 27+00

N:\2190\2190r004.dgn 03/01/2006 11:36:37 AM

F.A.U. RTE.	SECTION	COUNTY	TOTAL SHEETS	SHEET NO.
6145	01-00590-00-BR	LaSALLE	168	56
STA. N/A	TO STA. N/A			
FED. ROAD DIST. NO. 3	ILLINOIS	FEDERAL AID PROJECT		

CONTRACT NO. 87293

STA. 15+56.89, 114.00' LT. = STA. 71+13.21, 71.37' LT.
STA. 71+22.29, 11.00' RT., 625.76
STA. 17+26.78, 144.23' LT. = STA. 71+45.33, 98.17' RT.
STA. 17+99.35, 120.38' LT. = STA. 71+22.29, 171.00' RT.
STA. 70+56.43, 12.00' LT., 627.45
STA. 16+42.32, 89.51' LT. = STA. 70+89.67, 14.36' RT.
160' R., 2.1' o/s
STA. 17+01.23, 101.08' LT. = STA. 71+01.90, 73.10' RT.
STA. 15+75.63, 57.00' LT. = STA. 70+56.43, 52.00' LT.
STA. 16+64.14, 53.92' LT. = STA. 70+54.33, 36.54' RT.
STA. 15+88.12, 19.00' LT. = STA. 70+18.57, 39.09' LT.
STA. 16+70.65, 49.46' LT. = STA. 70+49.94, 43.10' RT.
STA. 17+26.78, 34.08' LT., 625.74
℄ SURVEY & ℄ CONSTRUCTION
1.5%
STA. 15+56.89, 14.00' LT., 627.79
STA. 15+20.00, 14.45'± LT., EXIST. 627.96±
STA. 15+20.00, 0.00' RT., EXIST. 628.07±
STA. 15+20.00, 13.85'± RT., EXIST. 627.72±
STA. 15+73.45, 14.00' RT., 627.87
PROPOSED TYPE B-6.12 CONCRETE CURB & GUTTER (TYP.)
STA. 15+73.45, 49.00' RT. = STA. 69+50.41, 53.00' LT.
STA. 16+05.38, 34.67' RT. = STA. 69+65.10, 21.23' LT.
STA. 15+14.15, 75.62' RT. = STA. 69+23.13, 112.00' LT.
STA. 69+23.13, 12.00' LT., 627.14
STA. 16+27.00 (F.A.U. RTE. 6145 (BROADWAY ST.)) = P.O.T. #36 STA. 70+00.00 (SHABBONA ST.)
P.O.T. #23 STA. 16+65.73
SEE N.E. QUAD. MEDIAN DETAIL
PROPOSED CONCRETE MEDIAN
F.A.U. RTE. 6145 (BROADWAY ST.)
SEE S.E. QUAD. MEDIAN DETAIL
STA. 16+91.93, 41.58' RT., 627.20
STA. 69+04.14, 11.00' RT., 626.83
STA. 16+91.93, 96.58' RT. = STA. 69+04.14, 66.00' RT.
SHABBONA ST.
90°38'14"
70+00
15+00
16
17
N
20' 0' 20'
GRAPHIC SCALE IN FEET

NOTE: UNLESS OTHERWISE NOTED, ELEVATIONS ARE LOCATED AT QUARTER POINTS ALONG THE RADIUS RETURN.

STA. 90+66.99, 13.00' LT., 622.69
PROPOSED TYPE B-6.24 CONCRETE CURB & GUTTER
STA. 19+67.44, 64.08' LT. = STA. 90+66.99, 43.00' LT.
PROPOSED TYPE B-6.12 CONCRETE CURB & GUTTER
STA. 19+67.44, 34.08' LT., 622.47
SEE TRANSITION DETAIL, SHEET NO. 69
30' R.
STA. 19+79.58, 00.08' LT. = STA. 90+01.19, 34.00' LT.
STA. 90+01.19, 14.00' LT., 622.93
STA. 19+79.58, 20.08' LT., 622.59
℄ SURVEY & ℄ CONSTRUCTION
STA. 19+75.00, 20.08' LT., 622.54
19
F.A.U. RTE. 6145 (BROADWAY ST.)
STA. 19+79.82, 27.58' RT., 622.76
20' R.
20+00
STA. 20+13.60 (F.A.U. RTE. 6145 (BROADWAY ST.)) = STA. 90+00.00 (ILLINOIS ST.)
PROPOSED TYPE B-6.12 CONCRETE CURB & GUTTER
SEE TRANSITION DETAIL, SHEET NO. 69
STA. 19+75.00, 27.58' RT., 622.74
STA. 89+93.39, 14.00' LT., 622.94
STA. 19+79.82, 7.58' RT. = STA. 89+93.39, 34.00' LT
PROPOSED TYPE B-6.12 CONCRETE CURB & GUTTER
STA. 19+58.51, 41.58' RT., 622.47
PROPOSED TYPE B-6.24 CONCRETE CURB & GUTTER
STA. 19+58.51, 81.58' RT. = STA. 89+17.87, 56.00' LT.
STA. 19+96.64, 69.47' RT. = STA. 89+30.46, 17.96' LT.
STA. 19+01.33, 99.74 RT. = STA. 88+99.12, 113.00' LT.
STA. 88+99.11, 13.00' LT., 622.72
40' R.
100' R.
ILLINOIS ST.
89
STA. 28+87.73, 76.39' LT. = STA. 110+78.06, 111.00' RT.
STA. 110+78.06, 11.00' RT., EXIST. 625.94±
STA. 110+78.06, 12.00' LT., EXIST. 625.90±
STA. 27+96.34, 35.79' LT. = STA. 110+36.10, 20.23' RT.
STA. 28+02.58, 37.19' LT., 625.91
STA. 27+10.27, 114.00' LT. = STA. 111+12.74, 67.97' LT.
STA. 110+51.22, 12.00' LT., 626.72
STA. 28+07.58, 37.11' LT., 625.81
STA. 28+28.33, 50.00' LT. = STA. 110+50.79, 52.00' RT.
STA. 27+29.79, 52.00' LT. = STA. 110+51.22, 47.00' LT.
STA. 28+28.33, 15.00' LT., 625.80
STA. 27+40.14, 18.62' LT. = STA. 110+18.09, 35.71' LT.
STA. 28+07.58, 30.71' LT., 625.94
STA. 29+00.00, 17.36'± LT., EXIST. 624.70±
STA. 27+10.27, 14.00' LT., 630.37
STA. 27+75.57 (F.A.U. RTE. 6145 (BROADWAY ST.)) = P.O.T. #43 STA. 110+00.00 (IOWA ST.)
℄ SURVEY & ℄ CONSTRUCTION
27
28
29
P.I. #25 STA. 27+39.80
90°51'26"
F.A.U. RTE. 6145 (BROADWAY ST.)
STA. 27+23.41, 14.00' RT., 629.68
PROPOSED TYPE B-6.12 CONCRETE CURB & GUTTER (TYP.)
STA. 27+23.41, 49.00' RT. = STA. 109+50.10, 51.00' LT.
STA. 27+55.82, 34.93' RT. = STA. 109+64.78, 19.23' LT.
STA. 109+47.69, 11.00' RT., 626.41
STA. 29+00.00, 11.79'± RT., EXIST. 624.78±
STA. 28+40.30, 15.00' RT., 625.53
STA. 28+10.27, 19.62' RT. = STA. 109+80.91, 35.00' RT.
STA. 109+22.82, 10.00' LT., EXIST. 626.03±
STA. 109+22.82, 11.00' RT., EXIST. 626.01±
STA. 28+20.78, 53.00' RT. = STA. 109+47.69, 46.00' RT.
STA. 26+63.79, 74.88' RT. = STA. 109+22.82, 110.00' LT.
EXIST. 626.21±
STA. 28+40.30, 115.00' RT. = STA. 108+85.99, 66.44' RT.
IOWA ST.
110+00
100' R.
35' R.

PROPOSED TYPE B-6.12 CONCRETE CURB & GUTTER (TYP.)
STA. 17+26.78, 144.23' LT. = STA. 71+45.33, 98.17' RT.
STA. 70+47.68, 19.00' RT., 628.02
STA. 16+45.51, 45.75' LT. = STA. 70+45.95, 18.00' RT.
STA. 16+47.62, 34.67' LT. = STA. 70+34.89, 20.23' RT., 628.34
STA. 70+45.32, 16.10' RT., 627.97
STA. 16+56.74, 41.42' LT. = STA. 70+41.75, 29.28' RT., 628.18
STA. 17+38.85, 75.62' LT. = STA. 70+76.86, 111.00' RT.
STA. 16+63.52, 37.41' LT. = STA. 70+37.81, 36.10' RT., 627.94
STA. 16+79.55, 49.00' LT. = STA. 70+49.58, 52.00' RT.
STA. 17+26.78, 20.08' LT., 625.95
PROPOSED CONCRETE MEDIAN
℄ SURVEY & ℄ CONSTRUCTION
17
STA. 16+79.55, 14.00' LT., 629.96
F.A.U. RTE. 6145 (BROADWAY ST.)
SHABBONA ST.
℄ SURVEY & ℄ CONSTRUCTION
70+00
2' R.
100' R.
12.15' R.
14'
35' R.
627.45
626.95
626.45
628.15
628.85
629.30
629.63
N.E. QUAD MEDIAN DETAIL

STA. 69+59.44, 14.29' RT., 628.14
STA. 69+65.05, 31.22' RT., 628.48
F.A.U. RTE. 6145 (BROADWAY ST.)
STA. 16+64.88, 19.00' RT., 629.43
℄ SURVEY & ℄ CONSTRUCTION
17
STA. 16+96.11, 14.00' RT., 630.54
STA. 69+73.09, 60.55' RT., 627.55
PROPOSED CONCRETE MEDIAN
STA. 16+77.37, 57.00' RT. = STA. 69+43.56, 51.00' RT.
STA. 16+42.66, 41.53' RT. = STA. 69+58.65, 16.12' RT.
STA. 69+56.91, 17.12' RT., 628.08
STA. 16+87.25, 87.58' RT. = STA. 69+13.09, 61.22' RT.
STA. 16+96.11, 114.00' RT. = STA. 68+86.77, 70.37' RT.
SHABBONA ST.
℄ SURVEY & ℄ CONSTRUCTION
2' R.
100' R.
40' R.
60' R.
55' R.
629.12
628.75
628.36
629.70
629.97
630.25
628.02
628.25
627.78
S.E. QUAD MEDIAN DETAIL

2190H001

F.A.U. RTE. 6145 (BROADWAY ST.) WITH SHABBONA ST., ILLINOIS ST. & IOWA ST., INTERSECTION DETAILS

F.A.U. RTE.	SECTION	COUNTY	TOTAL SHEETS	SHEET NO.
6145	01-00590-00-BR	LaSALLE	168	57
STA. 11+00		TO STA. 23+00		
FED. ROAD DIST. NO. 3	ILLINOIS	FEDERAL AID PROJECT		

CONTRACT NO. 87293

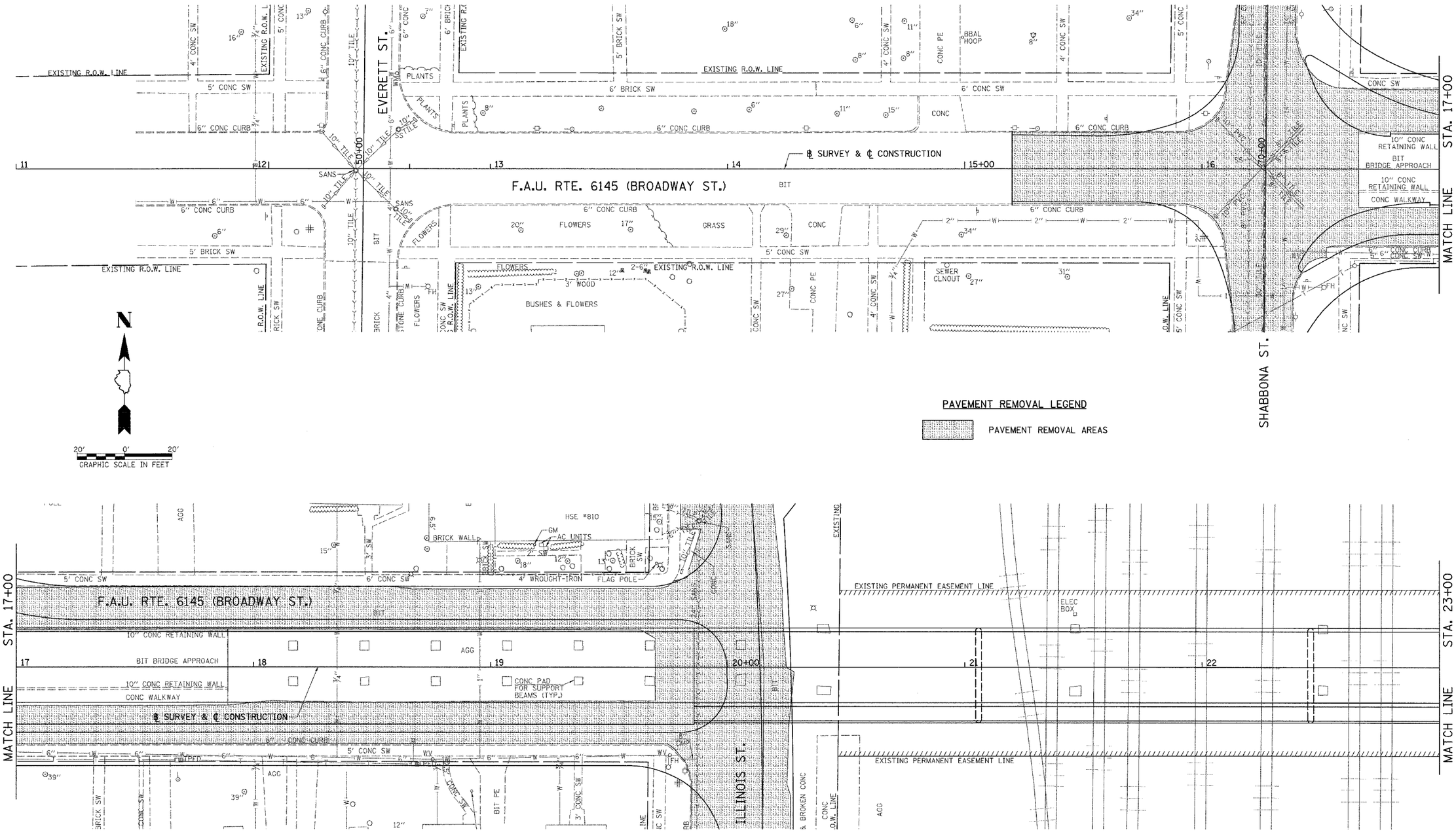

2190K001

F.A.U. RTE. 6145 (BROADWAY ST.), PAVEMENT REMOVAL AREAS, STA. 11+00 TO STA. 23+00

F.A.U. RTE.	SECTION	COUNTY	TOTAL SHEETS	SHEET NO.
6145	01-00590-00-BR	LaSALLE	168	58
STA. 23+00	TO STA. 33+00			
FED. ROAD DIST. NO. 3	ILLINOIS	FEDERAL AID PROJECT		

CONTRACT NO. 87293

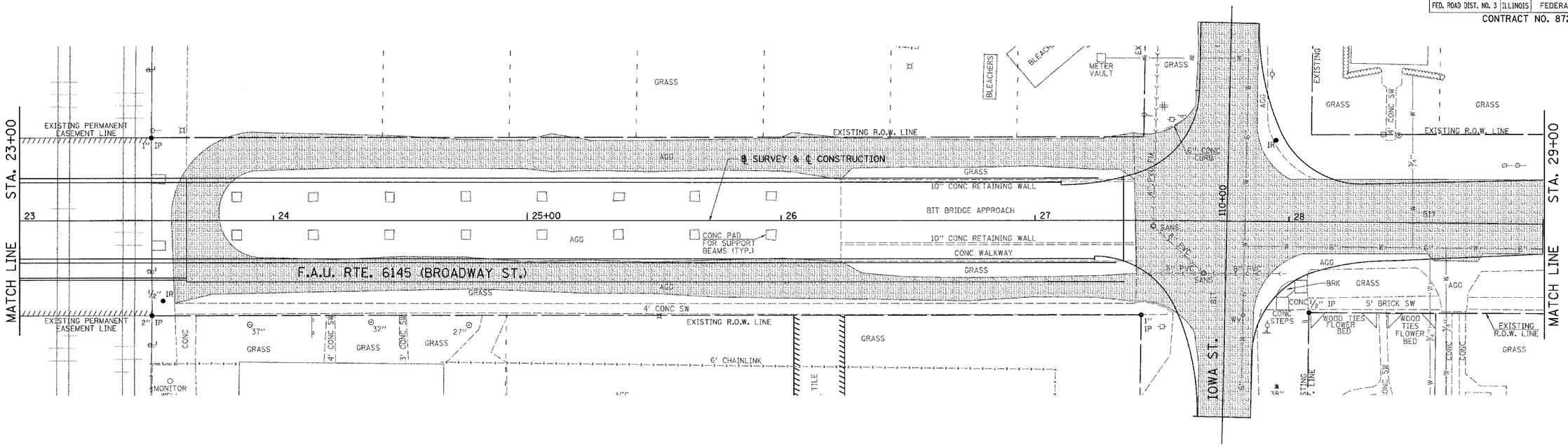

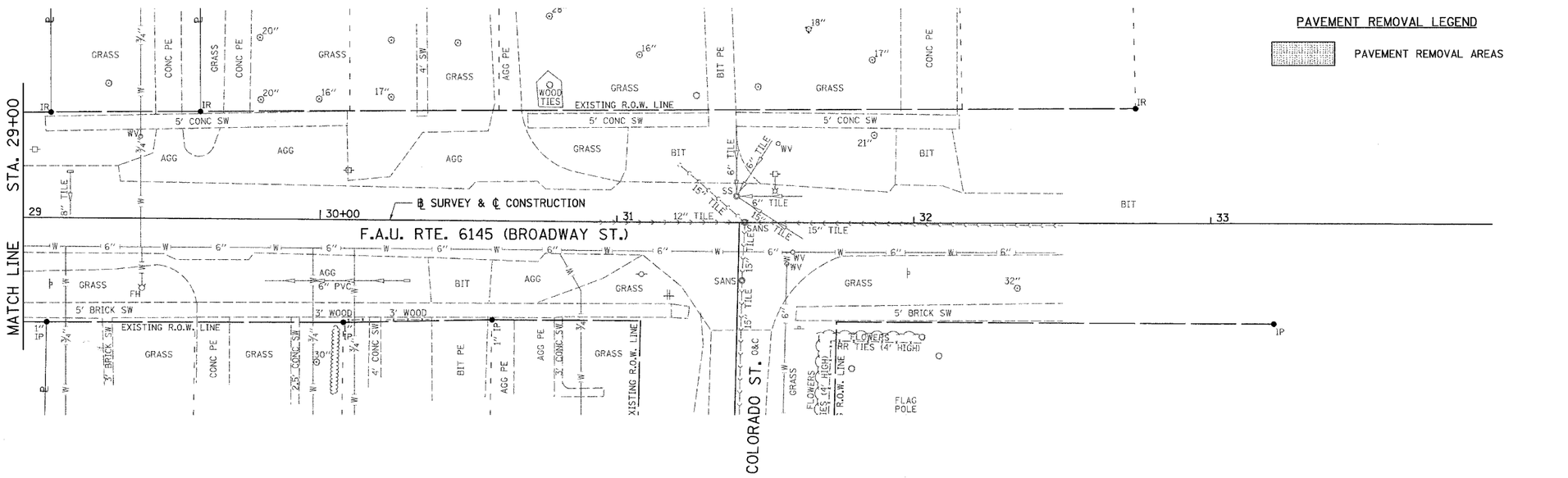

PAVEMENT REMOVAL LEGEND

PAVEMENT REMOVAL AREAS

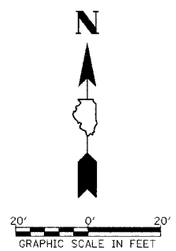

2190K002

F.A.U. RTE. 6145 (BROADWAY ST.), PAVEMENT REMOVAL AREAS, STA. 23+00 TO STA. 33+00

F.A.U. RTE.	SECTION	COUNTY	TOTAL SHEETS	SHEET NO.
6145	01-00590-00-BR	LaSALLE	168	59
STA. N/A	TO STA. N/A			
FED. ROAD DIST. NO. 3	ILLINOIS	FEDERAL AID PROJECT		

CONTRACT NO. 87293

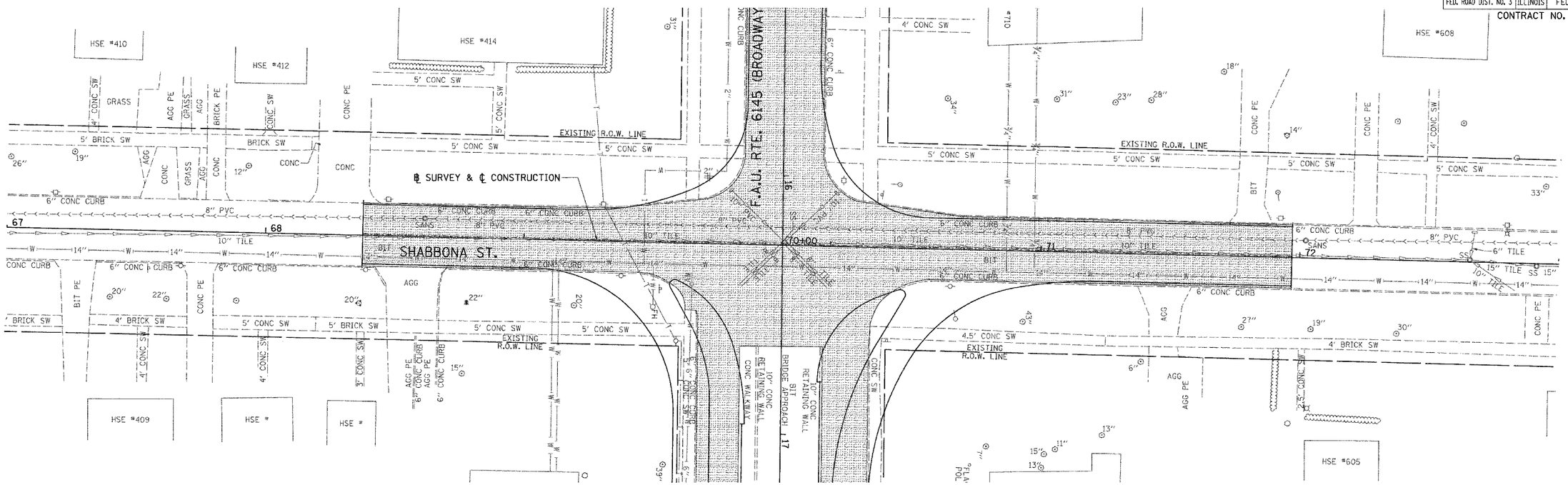

PAVEMENT REMOVAL LEGEND

PAVEMENT REMOVAL AREAS

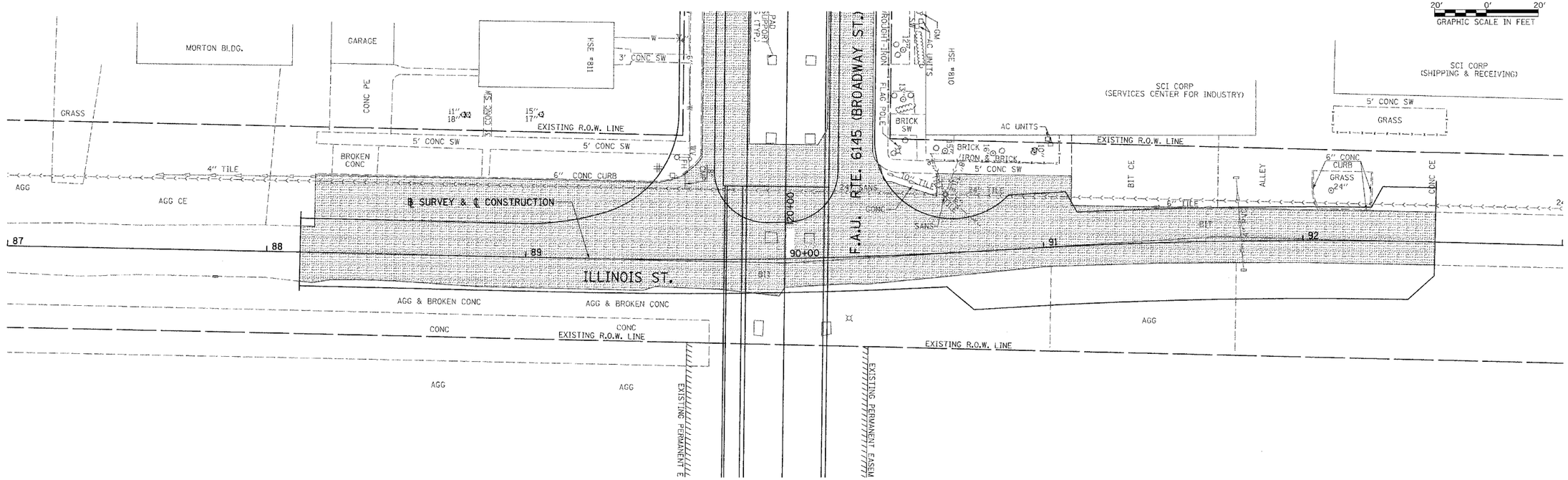

20' 0' 20'
GRAPHIC SCALE IN FEET

2190K003

SHABBONA ST. AND ILLINOIS ST., PAVEMENT REMOVAL AREAS

F.A.U. RTE.	SECTION	COUNTY	TOTAL SHEETS	SHEET NO.
6145	01-00590-00-BR	LaSALLE	168	60
STA. 11+00	TO STA. 23+00			
FED. ROAD DIST. NO. 3	ILLINOIS	FEDERAL AID PROJECT		

CONTRACT NO. 87293

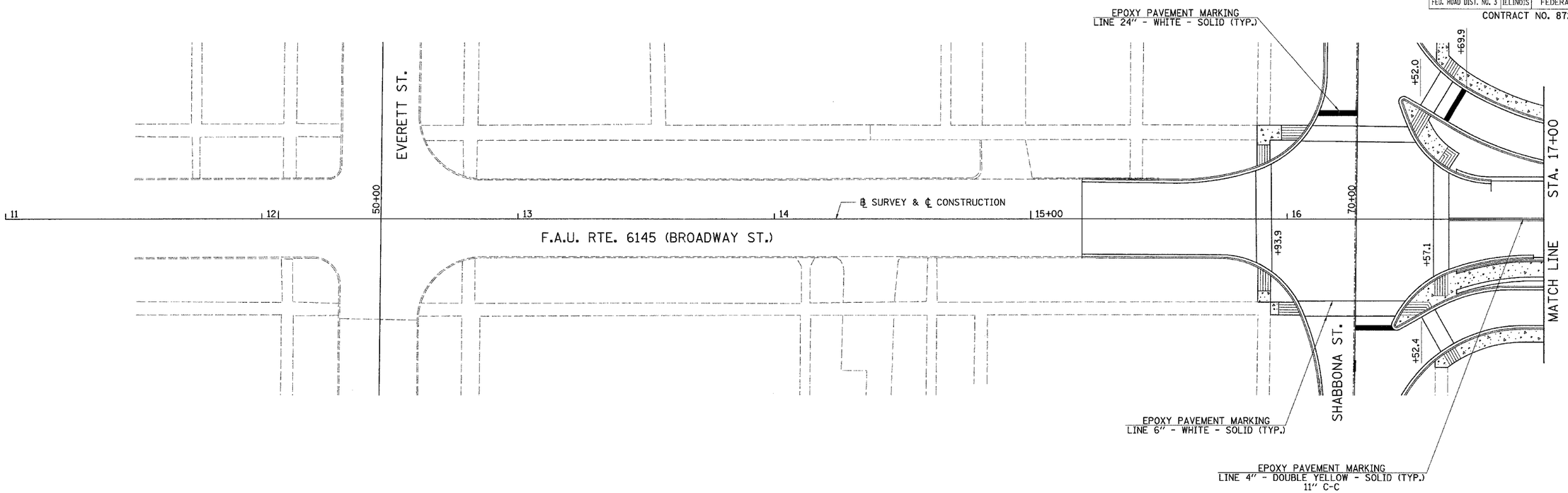

F.A.U. RTE.	SECTION	COUNTY	TOTAL SHEETS	SHEET NO.
6145	01-00590-00-BR	LaSALLE	168	61
STA. 23+00	TO STA. 33+00			
FED. ROAD DIST. NO. 3	ILLINOIS	FEDERAL AID PROJECT		

CONTRACT NO. 87293

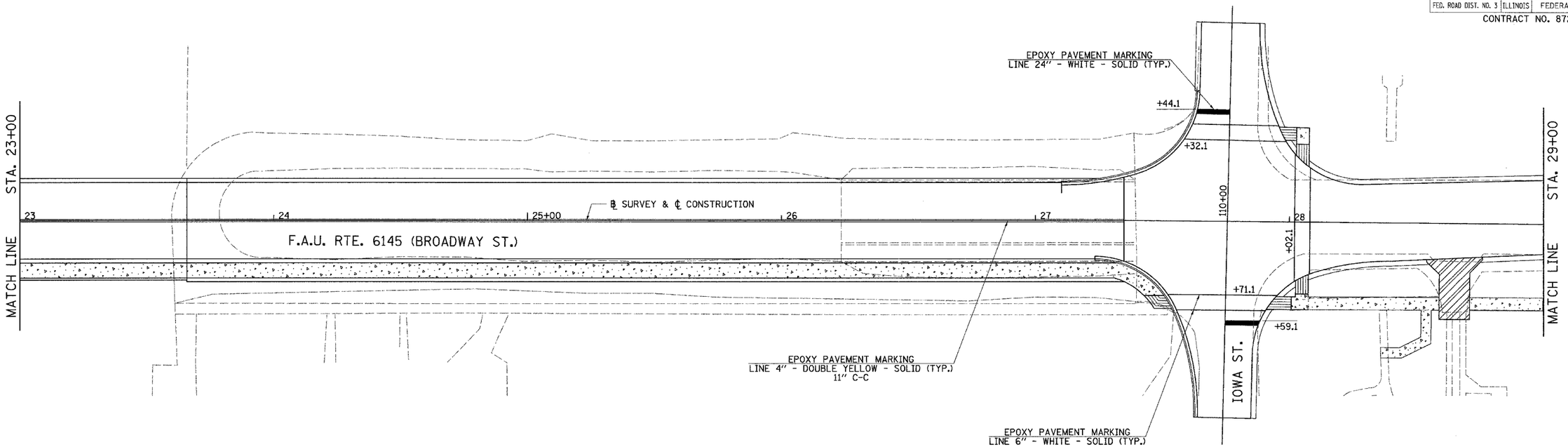

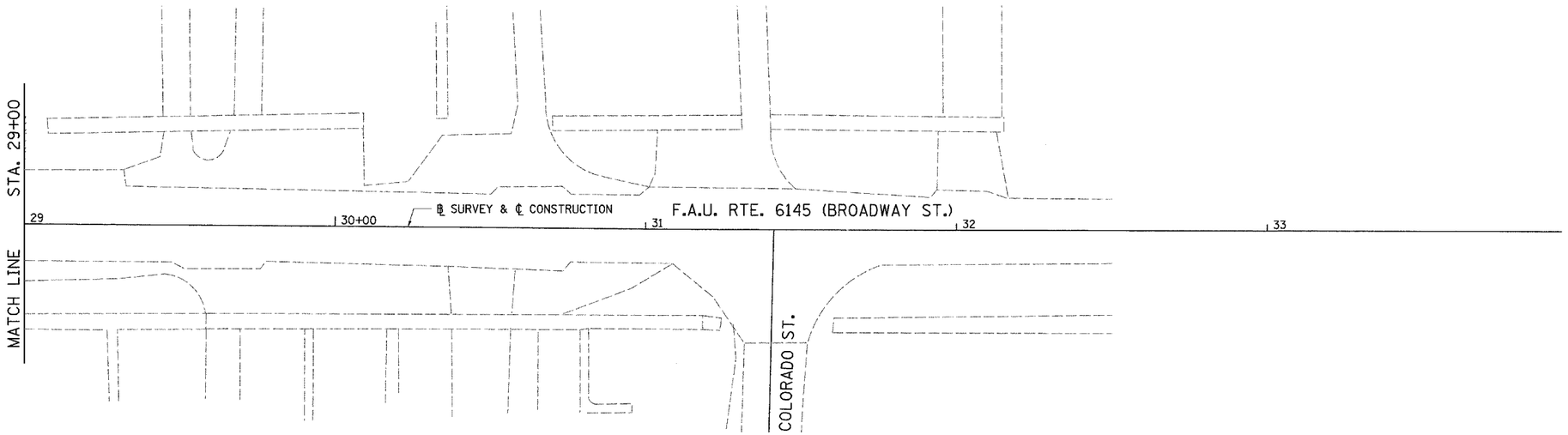

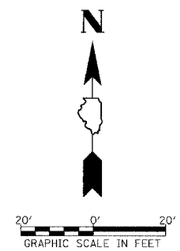

2190M002

F.A.U. RTE. 6145 (BROADWAY ST.), PAVEMENT MARKING PLANS, STA. 23+00 TO STA. 33+00

F.A.U. RTE.	SECTION	COUNTY	TOTAL SHEETS	SHEET NO.
6145	01-00590-00-BR	LaSALLE	168	62
STA. N/A		TO STA. N/A		
FED. ROAD DIST. NO. 3	ILLINOIS	FEDERAL AID PROJECT		

CONTRACT NO. 87293

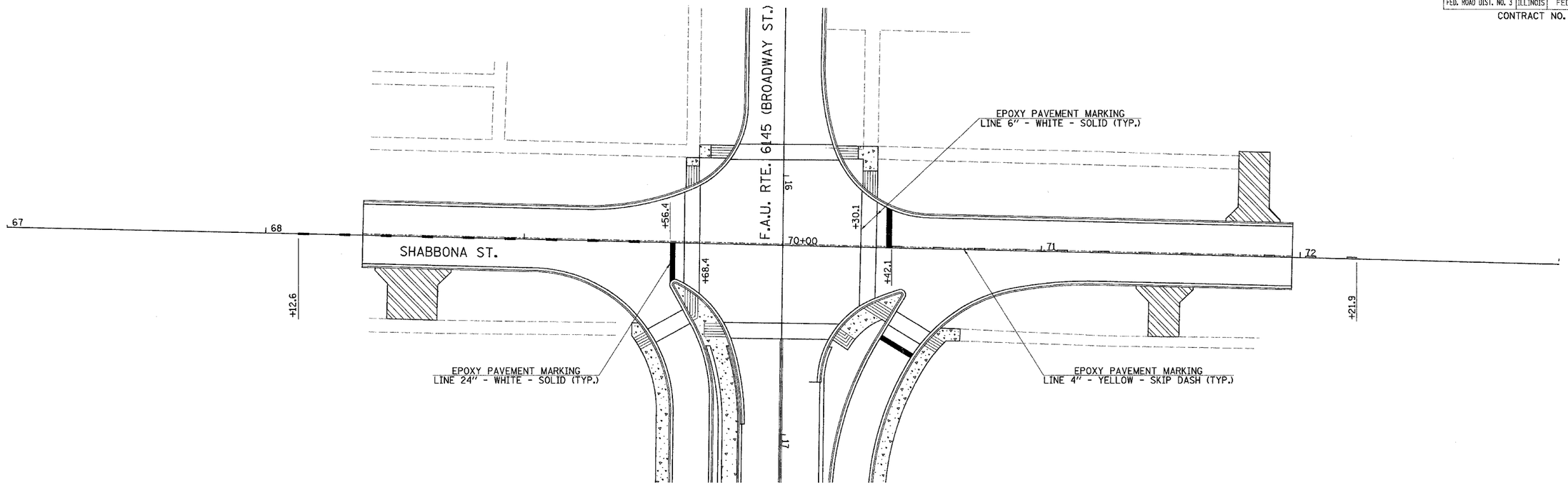

WIDTH OF PARKING:
COMBINATION CONCRETE CURB & GUTTER 8' MEASURED FROM FACE OF GUTTER.
TYPE B GUTTER 8' MEASURED FROM LOW POINT OF "V".

2190M003

SHABBONA ST. AND ILLINOIS ST., PAVEMENT MARKING PLAN

F.A.U. RTE.	SECTION	COUNTY	TOTAL SHEETS	SHEET NO.
6145	01-00590-00-BR	LaSALLE	168	63
STA. 11+00	TO STA. 23+00			
FED. ROAD DIST. NO. 3	ILLINOIS	FEDERAL AID PROJECT		

CONTRACT NO. 87293

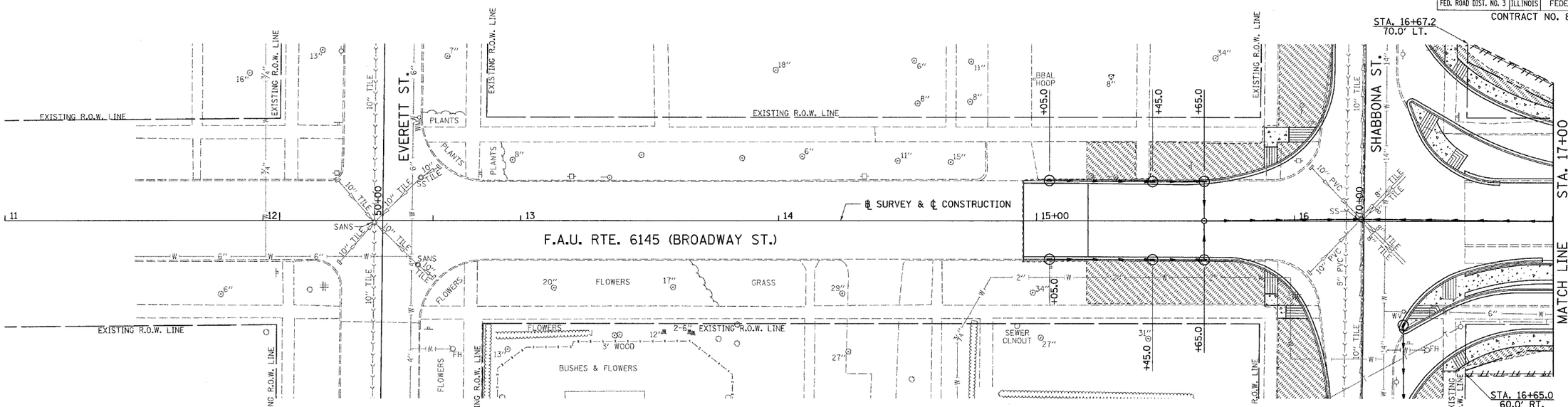

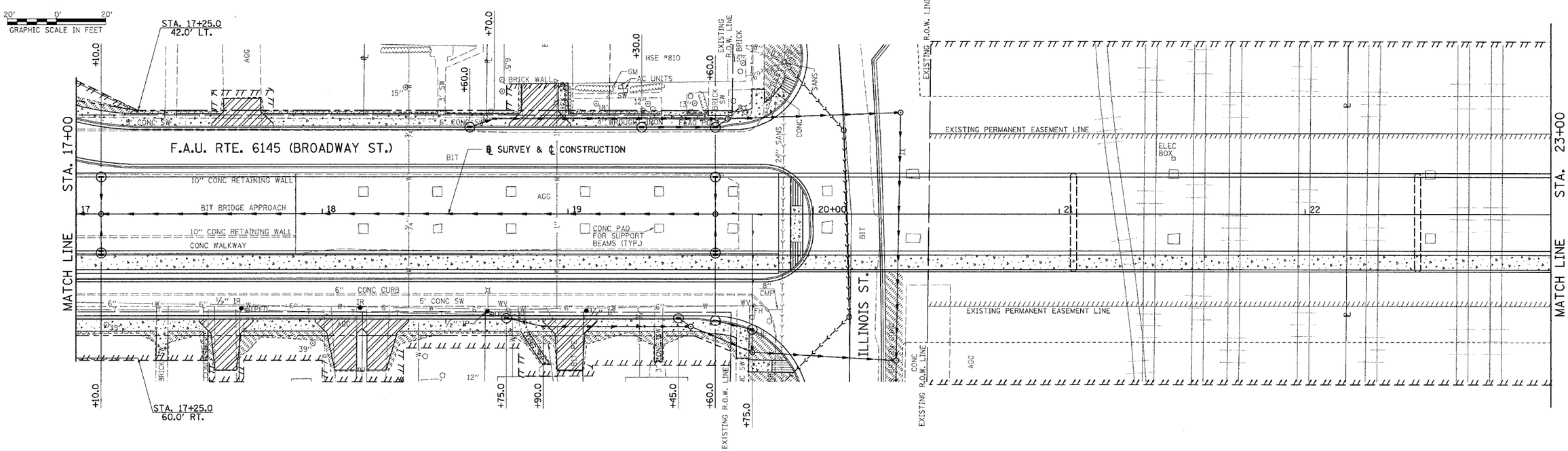

2190E001

F.A.U. RTE. 6145 (BROADWAY ST.), EROSION CONTROL PLANS, STA. 11+00 TO STA. 23+00

F.A.U. RTE.	SECTION	COUNTY	TOTAL SHEETS	SHEET NO.
6145	01-00590-00-BR	LaSALLE	168	64
STA. 23+00	TO STA. 33+00			
FED. ROAD DIST. NO. 3	ILLINOIS	FEDERAL AID PROJECT		

CONTRACT NO. 87293

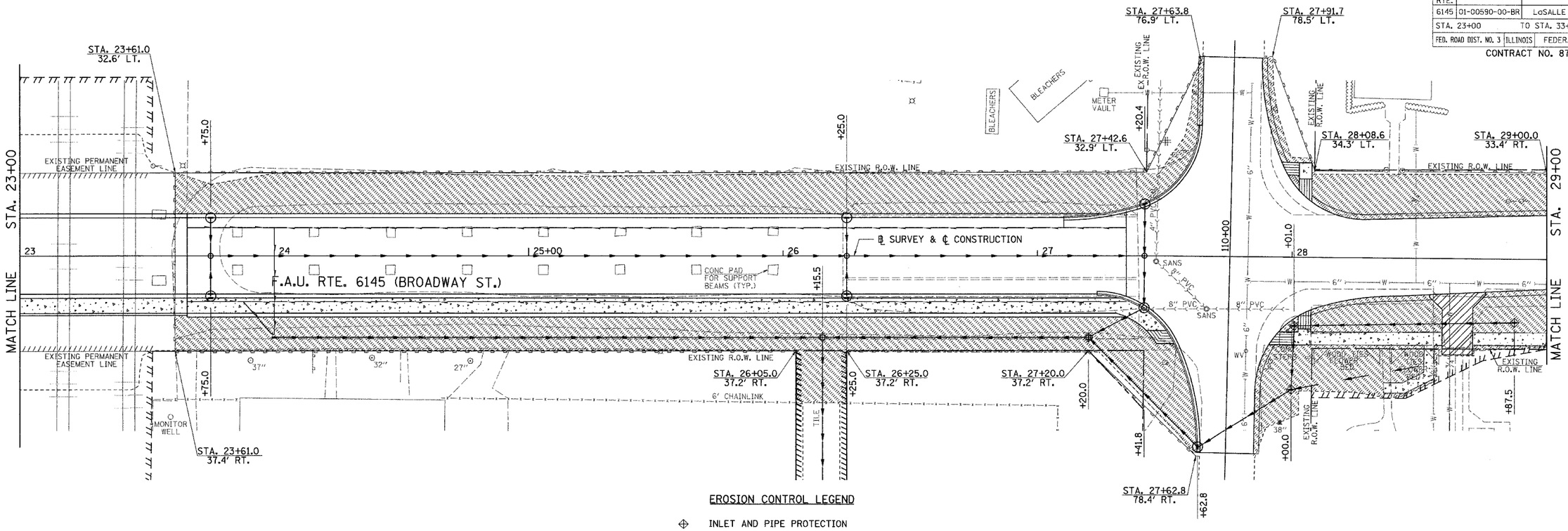

EROSION CONTROL LEGEND

- INLET AND PIPE PROTECTION
- FILTER FABRIC - INLET PROTECTION
- PERIMETER EROSION BARRIER
- SODDING (ENTIRE DISTURBED AREA AS DIRECTED BY THE ENGINEER.)

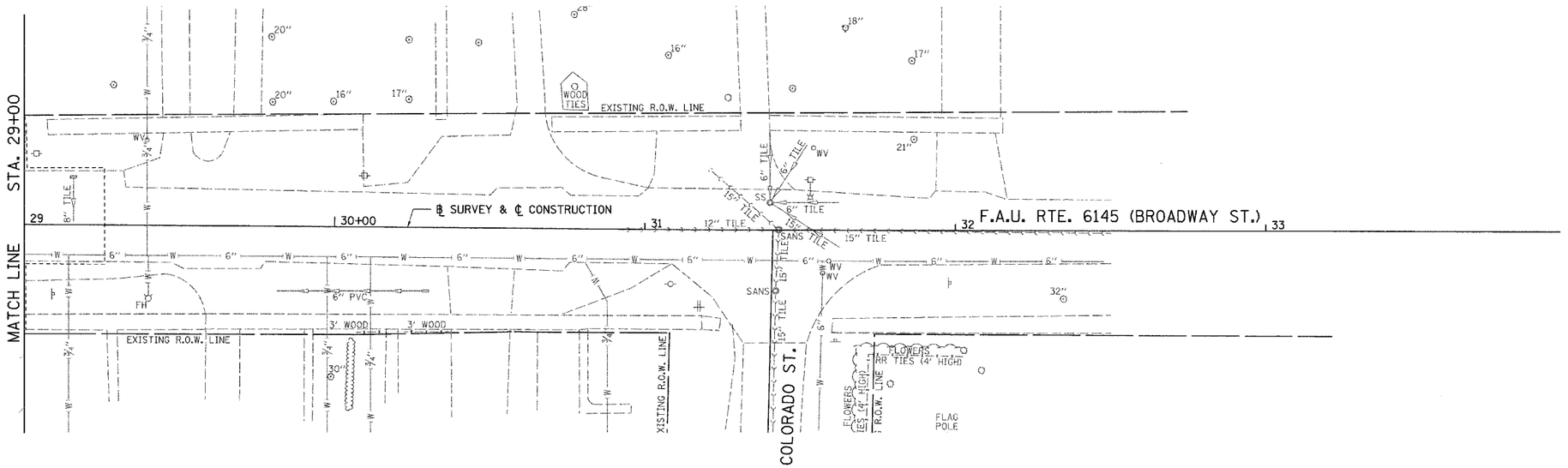

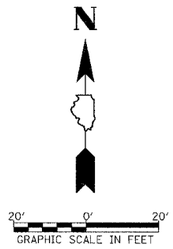

F.A.U. RTE.	SECTION	COUNTY	TOTAL SHEETS	SHEET NO.
6145	01-00590-00-BR	LaSALLE	168	65
STA. N/A	TO STA. N/A			
FED. ROAD DIST. NO. 3	ILLINOIS	FEDERAL AID PROJECT		

CONTRACT NO. 87293

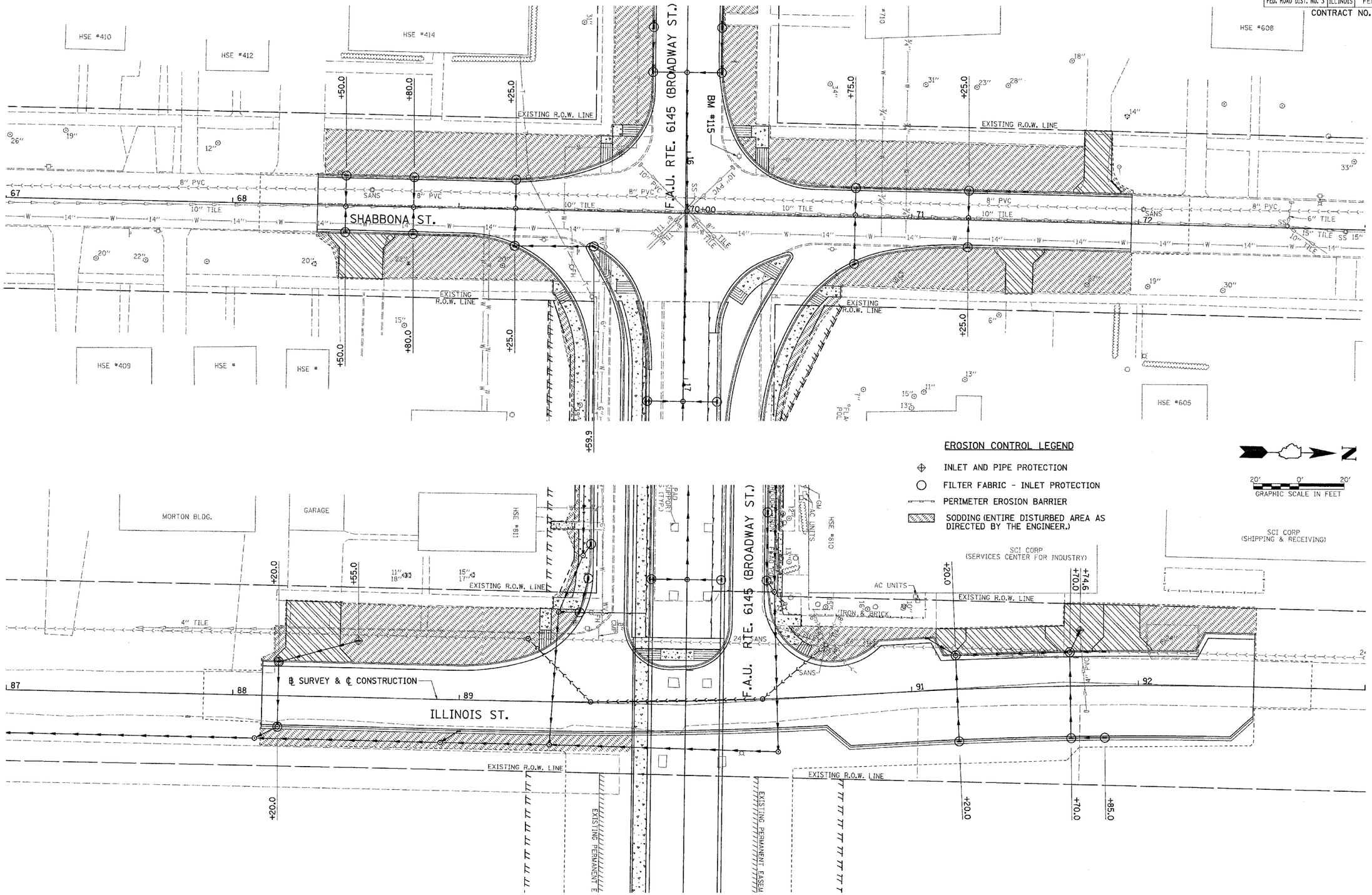

EROSION CONTROL LEGEND

- INLET AND PIPE PROTECTION
- FILTER FABRIC - INLET PROTECTION
- PERIMETER EROSION BARRIER
- SODDING (ENTIRE DISTURBED AREA AS DIRECTED BY THE ENGINEER.)

20' 0' 20'
GRAPHIC SCALE IN FEET

2190E003

SHABBONA ST. AND ILLINOIS ST., EROSION CONTROL PLAN

F.A.U. RTE.	SECTION	COUNTY	TOTAL SHEETS	SHEET NO.
6145	01-00590-00-BR	LaSALLE	168	66
STA. 11+00	TO STA. 23+00			
FED. ROAD DIST. NO. 3	ILLINOIS	FEDERAL AID PROJECT		

CONTRACT NO. 87293

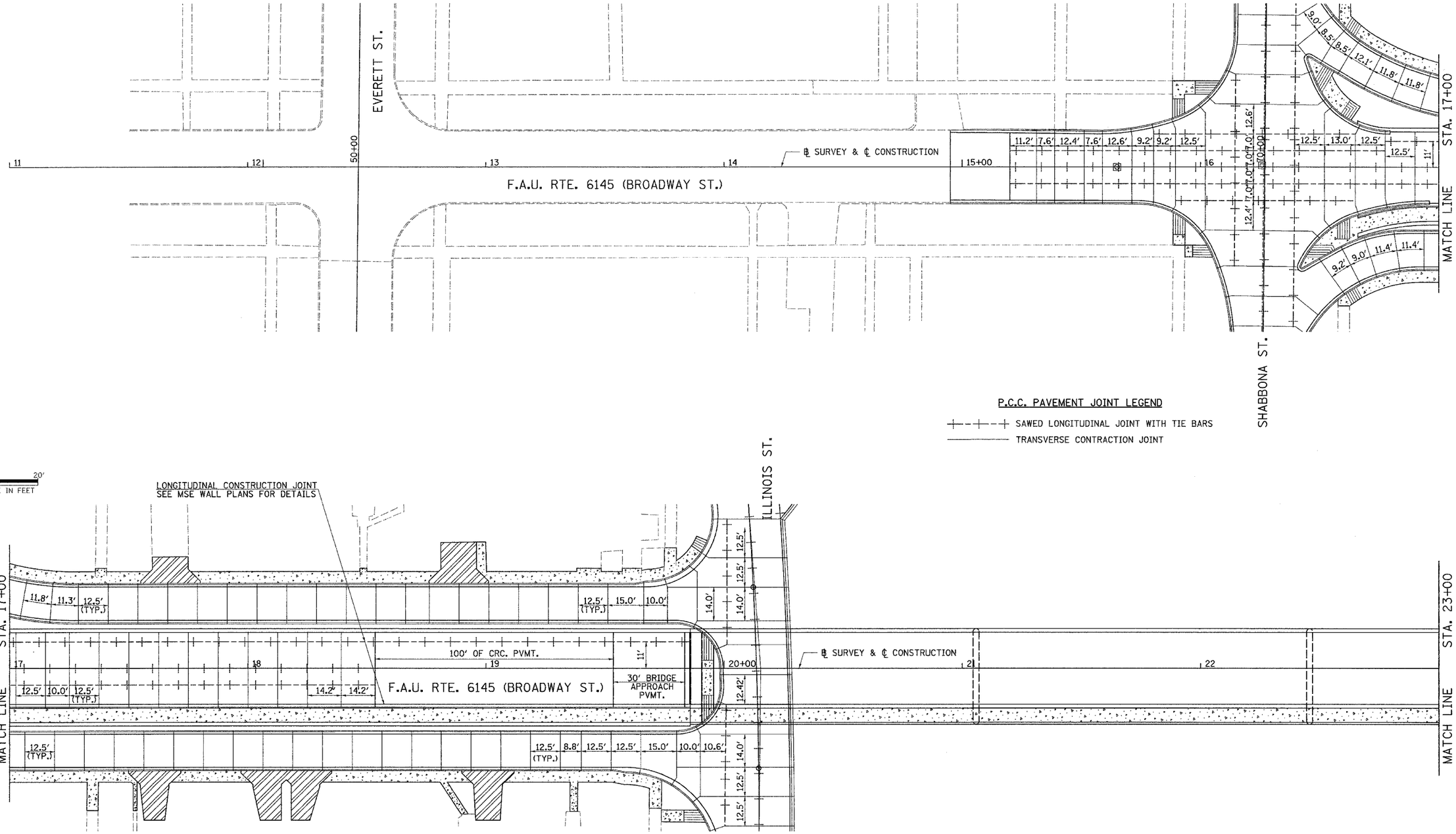

P.C.C. PAVEMENT JOINT LEGEND

+--+--+ SAWED LONGITUDINAL JOINT WITH TIE BARS

——— TRANSVERSE CONTRACTION JOINT

2190J001

F.A.U. RTE. 6145 (BROADWAY ST.), P.C.C. PAVEMENT JOINT DETAILS, STA. 11+00 TO STA. 23+00

F.A.U. RTE.	SECTION	COUNTY	TOTAL SHEETS	SHEET NO.
6145	01-00590-00-BR	LaSALLE	168	67
STA. 23+00	TO STA. 33+00			
FED. ROAD DIST. NO. 3	ILLINOIS	FEDERAL AID PROJECT		

CONTRACT NO. 87293

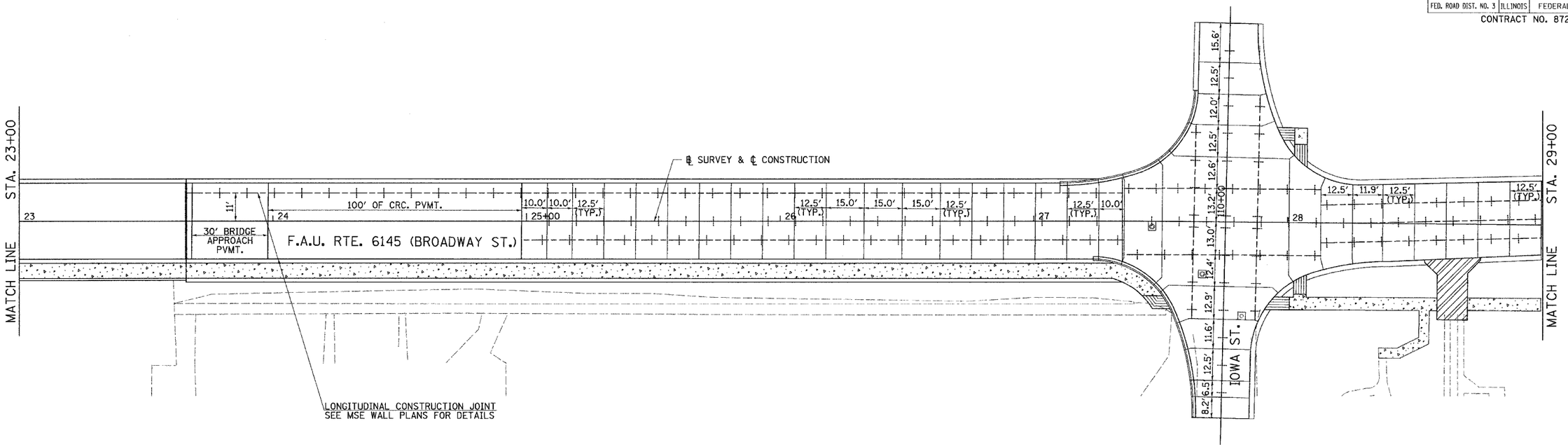

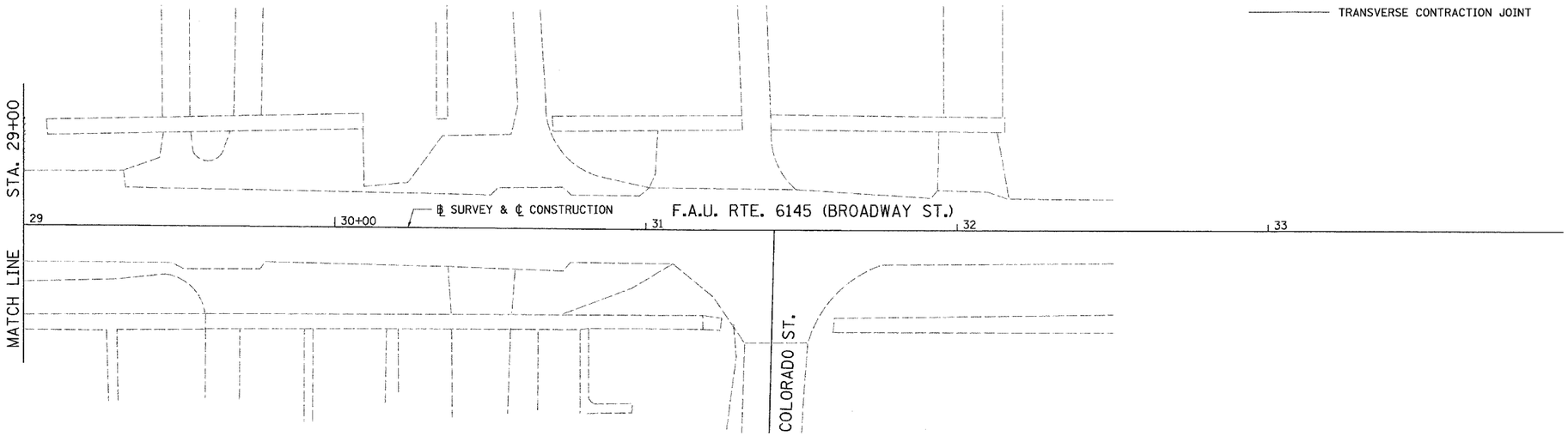

P.C.C. PAVEMENT JOINT LEGEND

+--+--+ SAWED LONGITUDINAL JOINT WITH TIE BARS

——————— TRANSVERSE CONTRACTION JOINT

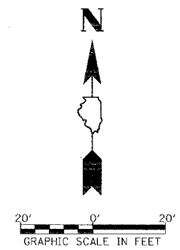

2190J002

F.A.U. RTE. 6145 (BROADWAY ST.), P.C.C. PAVEMENT JOINT DETAILS, STA. 23+00 TO STA. 33+00

F.A.U. RTE.	SECTION	COUNTY	TOTAL SHEETS	SHEET NO.
6145	01-00590-00-BR	LaSALLE	168	68
STA. N/A		TO STA. N/A		
FED. ROAD DIST. NO. 3	ILLINOIS	FEDERAL AID PROJECT		

CONTRACT NO. 87293

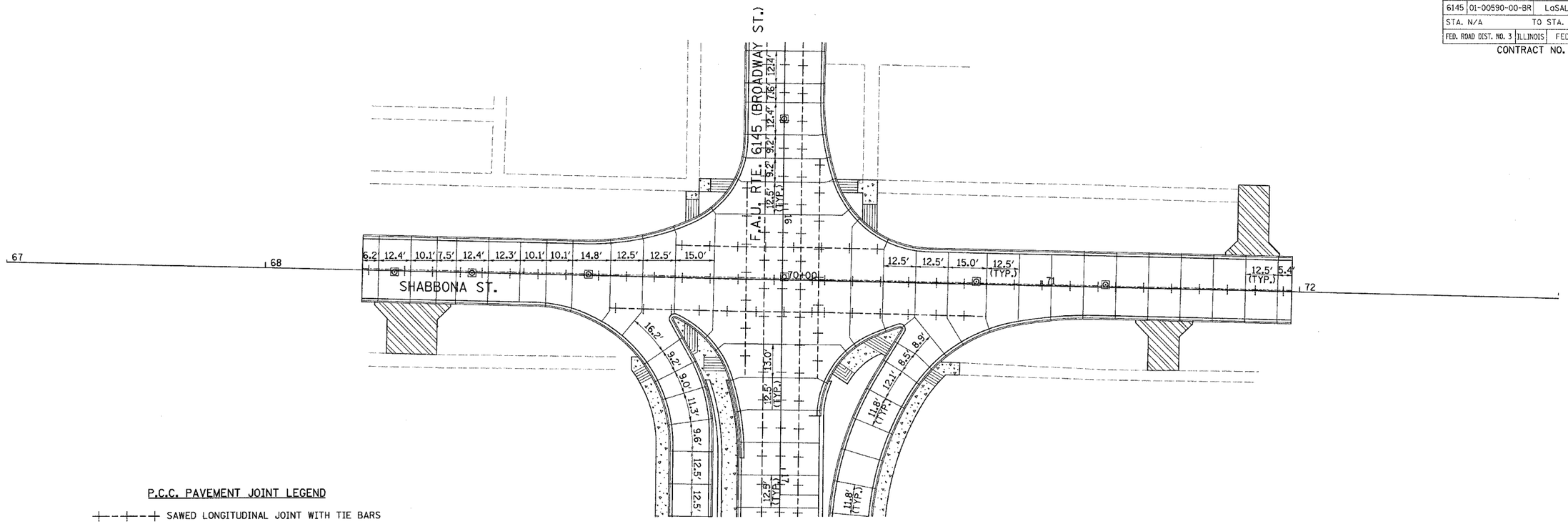

P.C.C. PAVEMENT JOINT LEGEND

+--+--+ SAWED LONGITUDINAL JOINT WITH TIE BARS

——— TRANSVERSE CONTRACTION JOINT

N

20' 0' 20'
GRAPHIC SCALE IN FEET

2190J003

SHABBONA ST. AND ILLINOIS ST., P.C.C. PAVEMENT JOINT DETAILS

F.A.U. RTE.	SECTION	COUNTY	TOTAL SHEETS	SHEET NO.
6145	01-00590-00-BR	LaSALLE	168	69
STA. N/A	TO STA. N/A			
FED. ROAD DIST. NO. 3	ILLINOIS	FEDERAL AID PROJECT		

CONTRACT NO. 87293

TABLE			
STATION	SIDE	WIDTH A• FT.	WIDTH B FT.
E. BROADWAY ST.			
28+65.2	RT.	12.0	12.0
SHABBONA ST.			
68+57.3	RT.	19.4	19.4
71+48.0	RT.	12.0	12.0
71+81.5	LT.	12.0	12.0
N.W. FRONTAGE ROAD			
17+67.4	LT.	15.0	15.0
18+88.6	LT.	15.0	15.0
S.W. FRONTAGE ROAD			
17+60.6	RT.	12.0	8.7
18+09.3	RT.	12.0	8.9
18+22.1	RT.	12.0	7.9
19+00.8	RT.	12.0	10.3
ILLINOIS ST.			
88+34.9	LT.	24.0	24.0
91+42.2	LT.	35.0	35.0
91+92.9	LT.	16.0	16.0

• WIDTH A IS 12.0' MIN. @ R.O.W. LINE

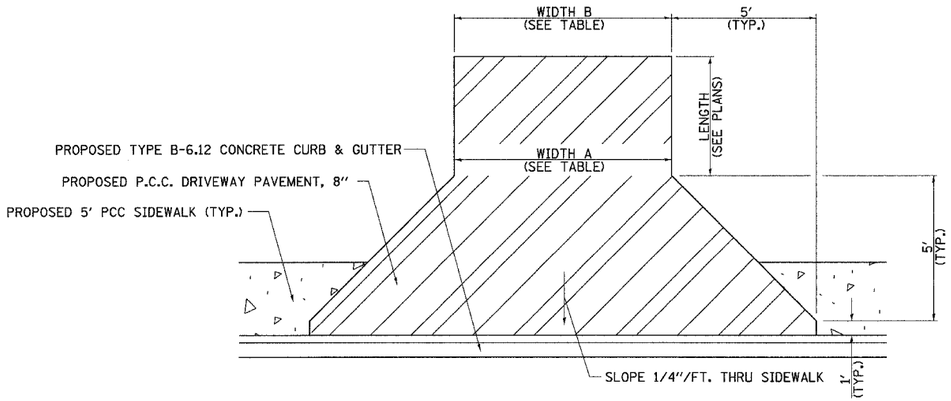

F.A.U. RTE. 6145 (BROADWAY ST.)

PLAN

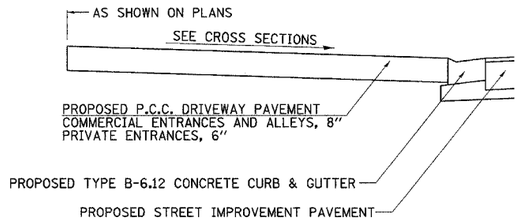

CROSS SECTION

ENTRANCE DETAILS

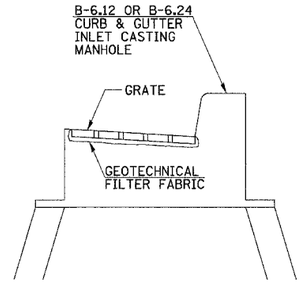

FILTER FABRIC-INLET PROTECTION DETAIL

TO BE PAID FOR AT THE CONTRACT UNIT PRICE "EACH" FOR "FILTER FABRIC- INLET PROTECTION"

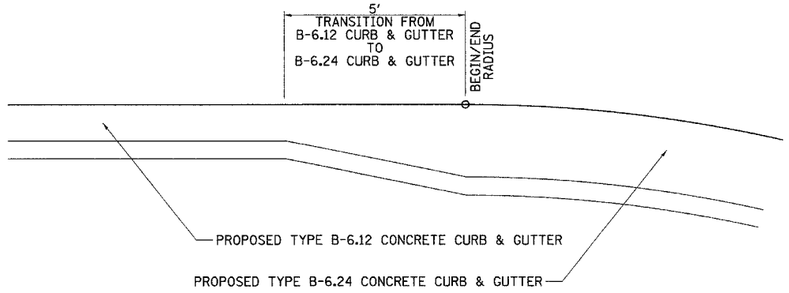

CURB & GUTTER TRANSITION DETAIL

F.A.U. RTE.	SECTION	COUNTY	TOTAL SHEETS	SHEET NO.
6145	01-00590-00-BR	LaSALLE	168	70
STA. N/A	TO STA. N/A			
FED. ROAD DIST. NO. 3	ILLINOIS	FEDERAL AID PROJECT		

CONTRACT NO. 87293

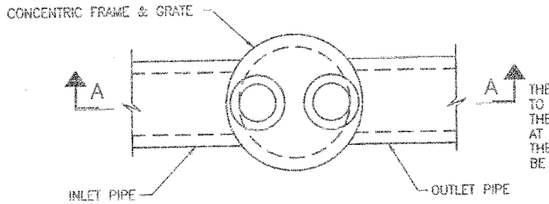

PLAN

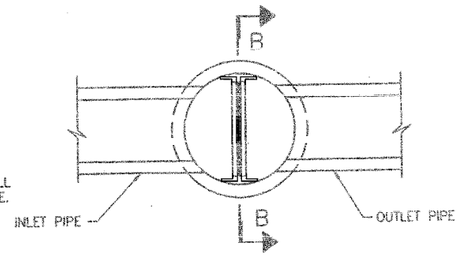

SECTION C-C

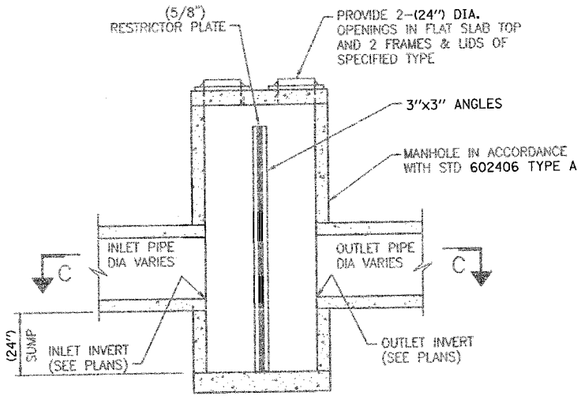

SECTION A-A

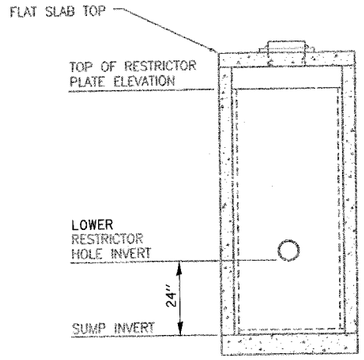

SECTION B-B

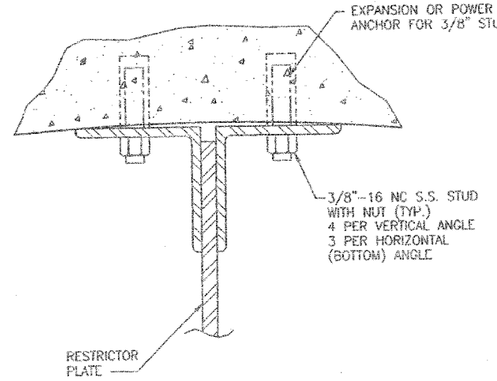

ANGLE FASTENER DETAIL

ALL STEEL ANGLES AND PLATES TO BE GALVANIZED AFTER FABRICATION. ALL RESTRICTOR PLATES AND HARDWARE TO BE INCIDENTAL TO THE COST OF THE MANHOLE.

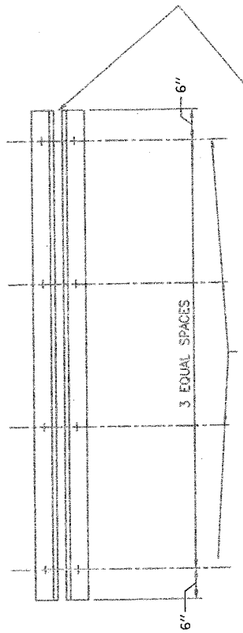

TYPICAL VERTICAL ANGLES LOOKING TOWARD MANHOLE WALL (2 SETS)

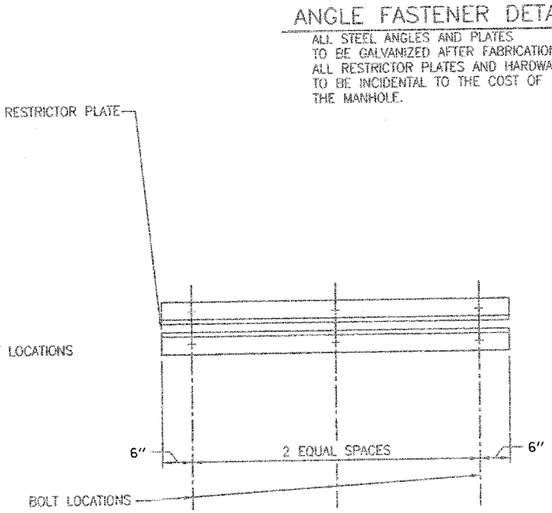

TYPICAL HORIZONTAL ANGLES LOOKING TOWARD BOTTOM OF MANHOLE (1 SETS) TOTAL BOLT HOLES REQUIRED : 22

ANGLE BOLTING DETAILS

ANGLES SHOULD BE 3"x3"x3/8" VERTICAL ANGLE SHOULD EXTEND FROM THE BOTTOM OF THE RESTRICTOR PLATE TO THE TOP. HORIZONTAL ANGLES SHOULD EXTEND FROM VERTICAL ANGLE TO VERTICAL ANGLE.

MANHOLES, TYPE A, 6' DIA., WITH 2-TYPE 1 FRAMES, CLOSED LID, RESTRICTOR PLATE

STATION	OFFSET	RESTRICTOR HOLE DIAMETER	RESTRICTOR HOLE INVERT	TOP OF RESTRICTOR PLATE ELEV.
84+64.56	19.0' RT.	8.0"	615.71	619.71

ROUTE NO.	SEC	COUNTY	TOTAL SHEETS	SHEET NO.
FAU 6145	*	LASALLE	168	71
FED. ROAD DIST. NO. 3	ILLINOIS	PROJECT		

SHEET NO. 1
6 SHEETS

* 01-00590-00-BR (County)

CONTRACT NO. 87293

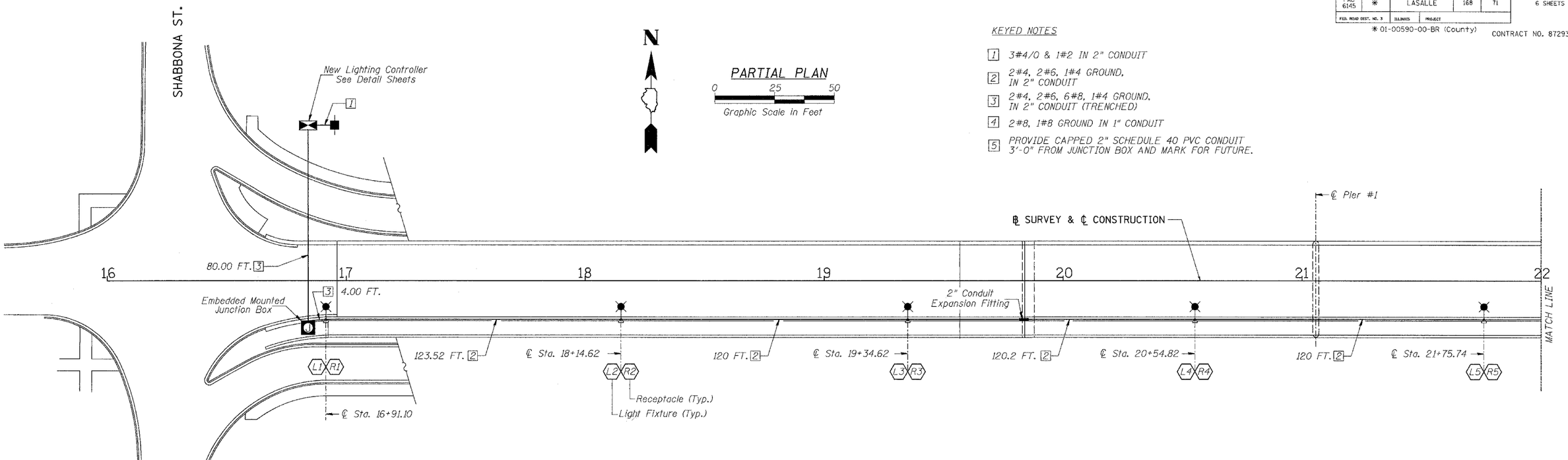

SUMMARY OF QUANTITIES			
PAY ITEM	UNIT	QUANTITY	NOTE
LIGHT POLE, ALUMINUM, 30 FT. MH, 1.5 FT. MAST ARM	EA	9	
LUMINAIRE, SODIUM VAPOR, RECTILINEAR TYPE, 250 WATT	EA	9	
CONDUIT EMBEDDED IN STRUCTURE 2" PVC	FT	1100	(1065+APPROACH TO CONTROLLER
ELECTRICAL CABLE IN CONDUIT, 600V (XLP TYPE USE) 1/C NO. 8	FT	610	FOR PHOTO-CELLS ON FIRST POLE FROM CONTROLLER
CONDUIT IN TRENCH, 2" DIA. PVC	FT	90	BRIDGE JUNCTION BOX TO CONTROLLER
ELECTRIC CABLE IN CONDUIT, 600V, (XLP TYPE USE) 1/C NO. 6	FT	2650	(1065+APPROACHS +TO CONTROLLER
ELECTRIC CABLE IN CONDUIT, 600V, (XLP TYPE USE) 1/C NO. 4	FT	3925	(1065+APPROACHS +TO CONTROLLER
SERVICE INSTALLATION, ELECTRIC	EA	1	
LIGHTING CONTROLLER TYPE CB-RCS 200A - 240 DUAL. SEE DETAIL ON SHEET E-6	EA	1	
LIGHTING CONTROLLER FOUNDATION. SEE DETAIL ON SHEET E-6	EA	1	
JUNCTION BOX, STAINLESS STEEL, EMBEDDED IN STRUCTURE 12"X10"X6"	EA	2	STAINLESS STEEL JUNCTION BOXES MUST BE COMPLETELY WATERTIGHT

NOTE: THIS TABLE SUMMARIZES ALL ELECTRICAL LIGHTING WORK.

FIXTURE TYPE	PERFORMANCE TABLE	LAMP/ WATTS	VOLTS	MOUNTING	REMARKS
LUMINAIRE, SODIUM VAPOR, RECTILINEAR TYPE, 250 WATT	GIVEN CONDITIONS ROADWAY DATA: PAVEMENT WIDTH — 26 FT NUMBER OF LANES — 2 MEDIAN WIDTH — N/A IES SURFACE CLASSIFICATION — R3 Q-ZERO VALUE — 0.07 LIGHT POLE DATA: MOUNTING HEIGHT — 33 FT MAST ARM LENGTH — 1.5 FT POLE SET-BACK FROM EDGE OF PAVEMENT — 3.5 FT LUMINAIRE DATA: LAMP TYPE — HPS LAMP LUMENS — 27500 IES VERTICAL DISTRIBUTION — M IES CONTROL DISTRIBUTION — C IES LATERAL DISTRIBUTION — III TOTAL LIGHT LOSS FACTOR — 0.68 LAYOUT DATA: SPACING — 120 FT CONFIGURATION — ONE SIDE ONLY LUMINAIRE OVERHANG OVER EDGE OF PAVEMENT LANE — -2 FT NOTE: Variations from the above specified IES distribution pattern may be requested and acceptance of variations will be subject to review by the Engineer based on how well the performance requirements are met. PERFORMANCE REQUIREMENTS NOTE: These performance requirements shall be the minimum acceptable standards of photometric performance for the luminaire, based on the given conditions listed above. ILLUMINATION: AVERAGE HORIZONTAL ILLUMINATION, (E_{AVE}) — 12.0 LUX UNIFORMITY RATIO, (E_{AVE}/E_{MIN}) — 4.0 LUMINANCE AVERAGE LUMINANCE: (L_{AVE}) — 0.8 CD/M UNIFORMITY RATIO, (L_{AVE}/L_{MIN}) — 3.0 (L_{AVE}/L_{MIN}) — 5.0 MAXIMUM VEILING LUMINANCE RATIO, (L_V/L_{AVE}) — 0.4	250 WATT HI PR SODIUM INITIAL LUMENS 27,500	240V AC	30' ALUMINUM ROUND POLE, 8" DIA AT BASE, 4" DIA AT TOP, 0.25" THICKNESS, 11.5" BOLT CIRCLE DIA BRACKET FOR FIXTURE ARM TO BE LOCATED ON POLE SO THAT LUMINAIRE MOUNTING HEIGHT IS 32'-10" ABOVE ℄ ROADWAY	FIXTURE TO HAVE A DUPLEX 120V, 20 AMPERE, GROUND FAULT INTERRUPTER RECEPTACLE

GENERAL NOTES

1. SEE ELECTRICAL WIRING SCHEMATIC DETAILS SHEETS E-3, E-4 & E-5.
2. PROVIDE #4 WIRES FOR RECEPTACLE CIRCUITS AND #6 WIRE FOR LIGHTING CIRCUITS
3. NOT USED
4. 2" EXPANSION/DEFLECTION COUPLING. LOCATION SHALL BE APPROVED BY THE ENGINEER.
5. SEE BRIDGE DRAWINGS FOR ADDITIONAL DETAILS

6. The 2 Stainless Steel Junction boxes must be completely watertight.

LIGHTING PLAN
FAU ROUTE 6145 OVER
BNSF RAILROAD
SECTION 01-00590-00-BR (COUNTY)
LASALLE COUNTY
STATION 21+75.75
STR. NO. 050-8023

E-1

HUTCHISON ENGINEERING, INC.
JACKSONVILLE & JOLIET, ILLINOIS
Date: 3 /10 /2006

2190L001

ROUTE NO.	SEC	COUNTY	TOTAL SHEETS	SHEET NO.
FAU 6145	*	LASALLE	168	72
FED. ROAD DIST. NO. 3	ILLINOIS	PROJECT		

* 01-00590-00-BR (County)

SHEET NO. 2
6 SHEETS

CONTRACT NO. 87293

KEYED NOTES

1. 3#4/0 & 1#2 IN 2" CONDUIT
2. 2#4, 2#6, 1#4 GROUND, IN 2" CONDUIT
3. 2#4, 2#6, 6#8, 1#4 GROUND, IN 2" CONDUIT (TRENCHED)
4. 2#8, 1#8 GROUND IN 1" CONDUIT
5. PROVIDE CAPPED 2" SCHEDULE 40 PVC CONDUIT 3'-0" FROM JUNCTION BOX AND MARK FOR FUTURE.

GENERAL NOTES

1. SEE ELECTRICAL WIRING SCHEMATIC DETAILS SHEETS E-3, E-4 & E-5.
2. PROVIDE #4 WIRES FOR RECEPTACLE CIRCUITS, #6 WIRE FOR LIGHTING CIRCUITS AND #8 FOR PHOTO-CELL CIRCUITS
3. NOT USED
4. 2" EXPANSION/DEFLECTION COUPLING, LOCATION SHALL BE APPROVED BY THE ENGINEER.
5. SEE BRIDGE DRAWINGS FOR ADDITIONAL DETAILS
6. The 2 Stainless Steel Junction boxes must be completely watertight.

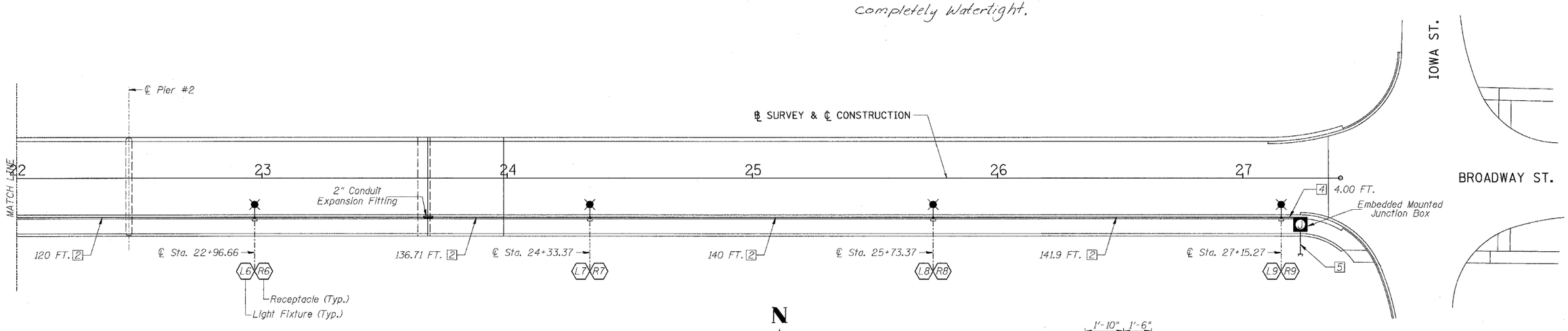

PARTIAL PLAN

0 25 50

Graphic Scale in Feet

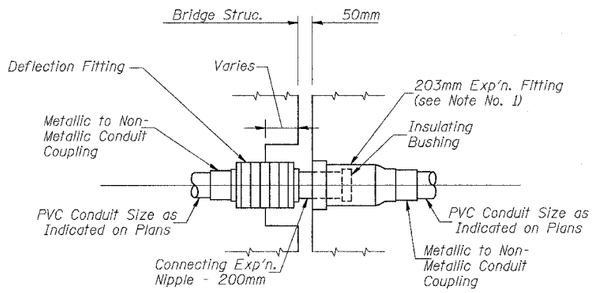

* CONDUIT EXPANSION / DEFLECTION COUPLING DETAIL

NOTE - Cost of conduit expansion/deflection coupling is included in the pay item for conduit.

* NOTES:

1. The barrel of the fitting shall be fully embedded in the concrete of one side of the expansion joint.
2. A cavity opening, if required, shall be a 75mm larger diameter than the deflection sleeve diameter and a maximum depth of half of the deflection sleeve length. The deflection fitting shall be centered in the opening and embedded in the concrete only up to the deflection fitting center.

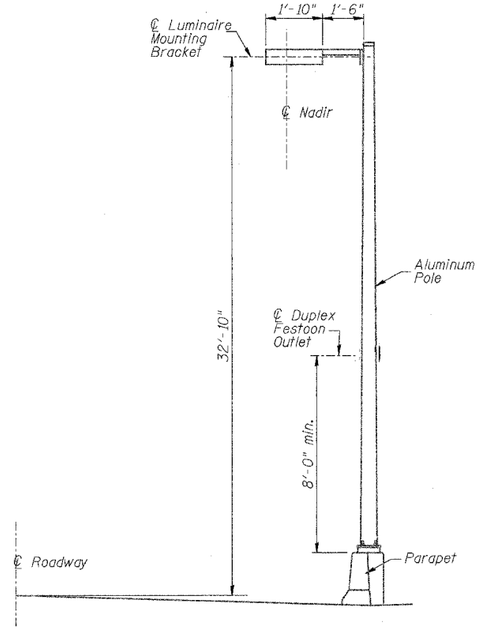

TYPICAL LIGHT POLE SECTION

No Scale

LIGHTING PLAN
FAU ROUTE 6145 OVER
BNSF RAILROAD
SECTION 01-00590-00-BR (COUNTY)
LASALLE COUNTY
STATION 21+75.75
STR. NO. 050-8023

E-2

HUTCHISON ENGINEERING, INC.
JACKSONVILLE & JOLIET, ILLINOIS
Date: 3 /10 /2006

2190L002

ROUTE NO.	SEC	COUNTY	TOTAL SHEETS	SHEET NO.
FAU 6145	*	LASALLE	168	73
FED. ROAD DIST. NO. 3	ILLINOIS	PROJECT		

SHEET NO. 3
6 SHEETS

* 01-00590-00-BR (County)

CONTRACT NO. 87293

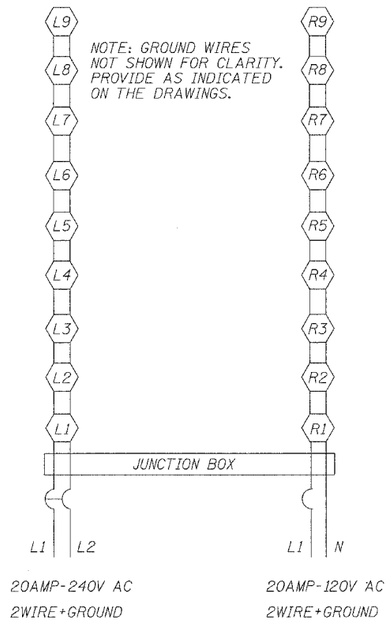

NOTE: GROUND WIRES NOT SHOWN FOR CLARITY. PROVIDE AS INDICATED ON THE DRAWINGS.

20AMP-240V AC
2WIRE+GROUND

20AMP-120V AC
2WIRE+GROUND

LEGEND FOR THIS SHEET	
⟨L#⟩	"L" STANDS FOR LUMINAIRE # IS THE LUMINAIRE TAG SEE ELECTRICAL DRAWINGS FOR LOCATIONS
⟨R#⟩	"R" STANDS FOR RECEPTACLE # IS THE RECEPTACLE TAG SEE ELECTRICAL DRAWINGS FOR LOCATIONS

LIGHTING AND RECEPTACLE WIRING SCHEMATIC - SOUTH SIDE OF BRIDGE

LIGHTING SCHEMATIC
FAU ROUTE 6145 OVER
BNSF RAILROAD
SECTION 01-00590-00-BR (COUNTY)
LASALLE COUNTY
STATION 21+75.75
STR. NO. 050-8023

E-3

HUTCHISON ENGINEERING, INC.
JACKSONVILLE & JOLIET, ILLINOIS
Date: 3 /10 /2006

2190L003

ROUTE NO.	SEC	COUNTY	TOTAL SHEETS	SHEET NO.
FAU 6145	*	LASALLE	168	74
FED. ROAD DIST. NO. 3	ILLINOIS	PROJECT		

SHEET NO. 4
6 SHEETS

* 01-00590-00-BR (County)

CONTRACT NO. 87293

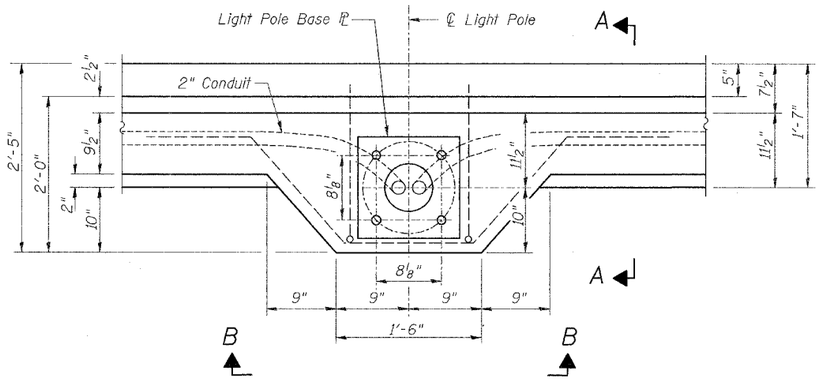

LIGHT POLE ON PARAPET
PLAN VIEW

NOTE: Receptacle circuit wiring similar to lighting circuit wiring shown including fuseholder and surge arrester. Provide slug in neutral connection of double pole fuse holder.

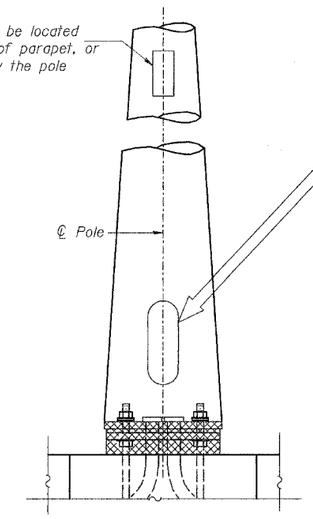

VIEW B-B

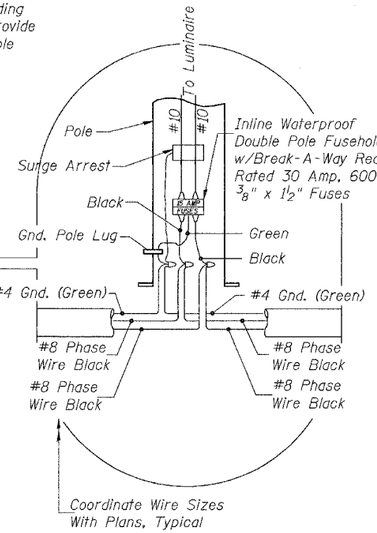

POLE WIRING DETAIL

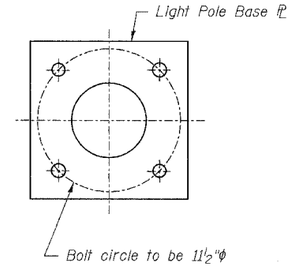

BASE PLATE
MOUNTING DETAIL

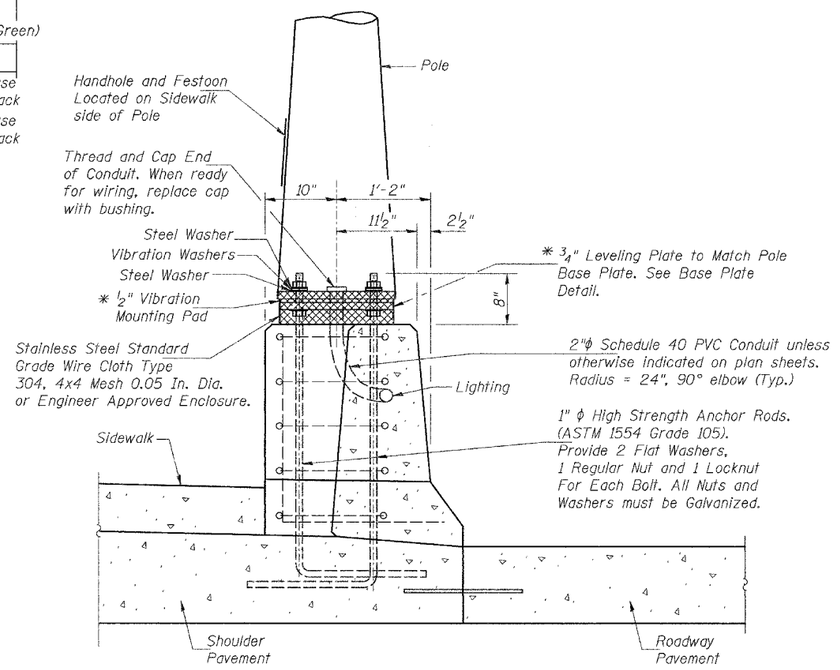

SECTION A-A

* Each Standard shall be provided with shock absorbing vibration pads, washers and leveling plate for its erection on the foundation as shown on the plans. The vibration pads and washers shall be of such size as recommended by the pole manufacturer. Cost shall be included with Light Pole.

CONDUIT IN PARAPET DETAILS
FAU ROUTE 6145 OVER
BNSF RAILROAD
SECTION 01-00590-00-BR (COUNTY)
LASALLE COUNTY
STATION 21+75.75
STR. NO. 050-8023

E-4

HUTCHISON ENGINEERING, INC.
JACKSONVILLE & JOLIET, ILLINOIS
Date: 3 /10 /2006

2190L.004

ROUTE NO.	SEC	COUNTY	TOTAL SHEETS	SHEET NO.
FAU 6145	*	LASALLE	168	75
FED. ROAD DIST. NO. 3	ILLINOIS	PROJECT		

SHEET NO. 5
6 SHEETS

* 01-00590-00-BR (County)

CONTRACT NO. 87293

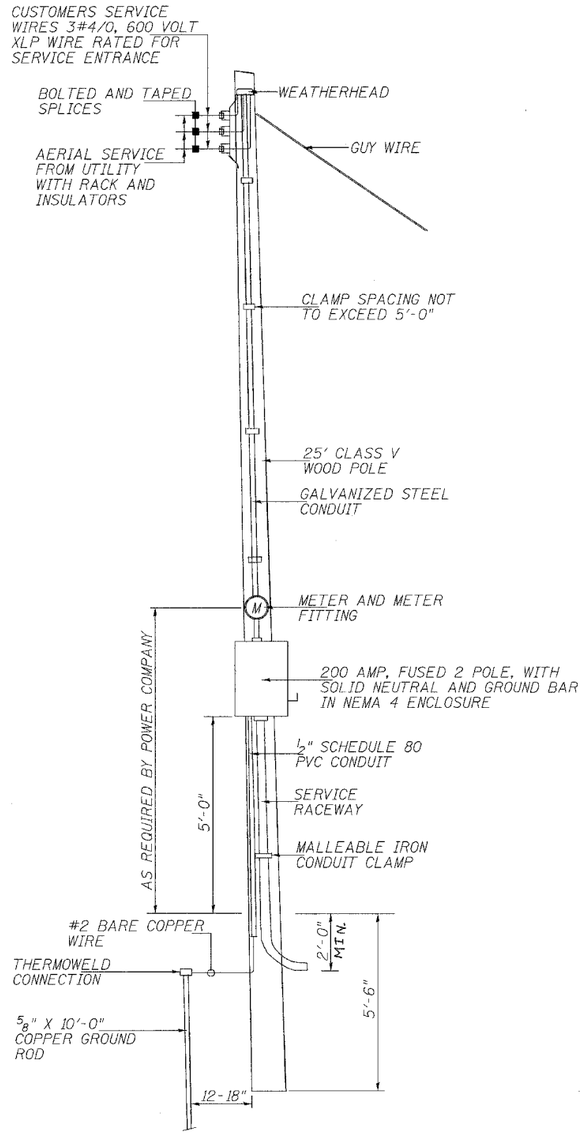

SERVICE POLE

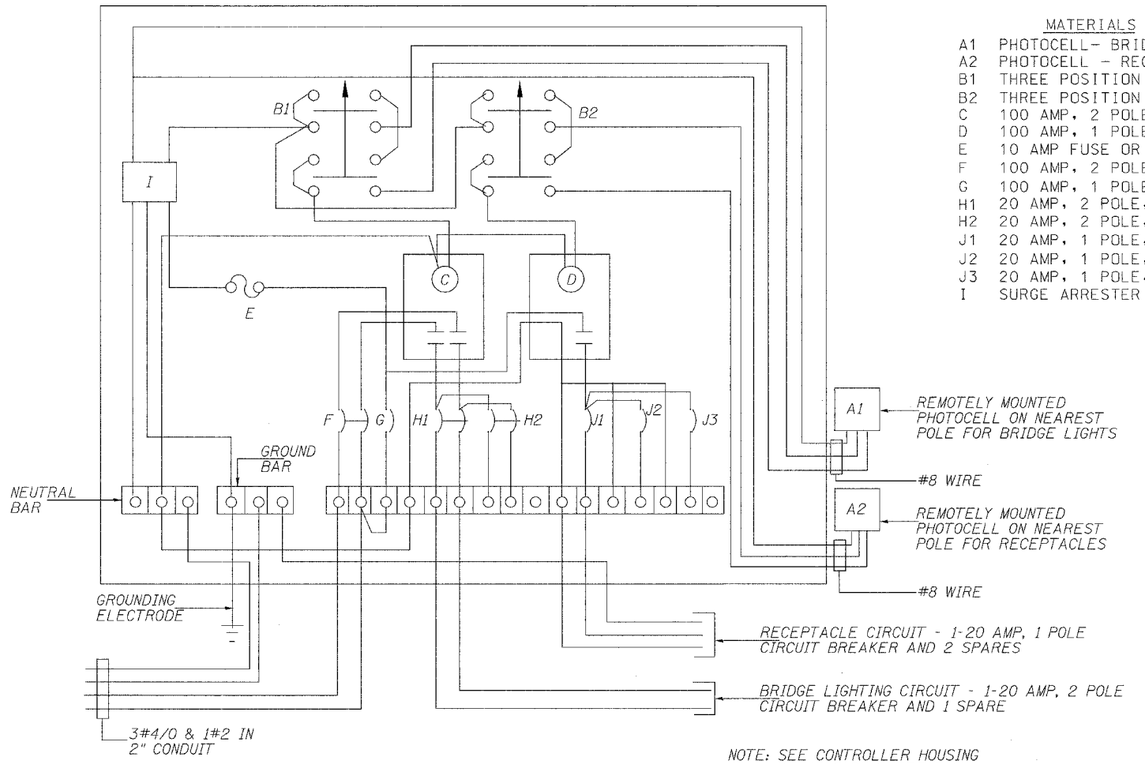

NOTE: SEE CONTROLLER HOUSING DETAILS ON SHEET E-6.

MATERIALS

A1	PHOTOCELL- BRIDGE LIGHTING
A2	PHOTOCELL - RECEPTACLES
B1	THREE POSITION SELECTOR SWITCH
B2	THREE POSITION SELECTOR SWITCH
C	100 AMP, 2 POLE, ELECTRICALLY HELD CONTACTOR
D	100 AMP, 1 POLE, ELECTRICALLY HELD CONTACTOR
E	10 AMP FUSE OR 15 AMP CIRCUIT BREAKER
F	100 AMP, 2 POLE, MAIN CIRCUIT BREAKER
G	100 AMP, 1 POLE, MAIN CIRCUIT BREAKER
H1	20 AMP, 2 POLE, CIRCUIT BREAKER FOR LIGHTING
H2	20 AMP, 2 POLE, SPARE CIRCUIT BREAKER
J1	20 AMP, 1 POLE, CIRCUIT BREAKER FOR RECEPTACLES
J2	20 AMP, 1 POLE, SPARE CIRCUIT BREAKER
J3	20 AMP, 1 POLE, SPARE CIRCUIT BREAKER
I	SURGE ARRESTER

LIGHTING CONTROLLER

LOCATION TO BE DETERMINED DURING FINAL DESIGN.

NOTES: LIGHTNING PROTECTION IN ACCORDANCE WITH ARTICLE 1065.02 OF THE STANDARD SPECIFICATIONS.

FUSE DISCONNECT TO BE EQUIPPED WITH LOCKABLE HANDLE.

CONTROLLER DETAILS
FAU ROUTE 6145 OVER
BNSF RAILROAD
SECTION 01-00590-00-BR (COUNTY)
LASALLE COUNTY
STATION 21+75.75
STR. NO. 050-8023

E-5

HUTCHISON ENGINEERING, INC.
JACKSONVILLE & JOLIET, ILLINOIS
Date: 3 /10 /2006

2190L005

ROUTE NO.	SEC	COUNTY	TOTAL SHEETS	SHEET NO.
FAU 6145	*	LASALLE	168	76
FED. ROAD DIST. NO. 3	ILLINOIS	PROJECT		

* 01-00590-00-BR (County)

SHEET NO. 6
6 SHEETS

CONTRACT NO. 87293

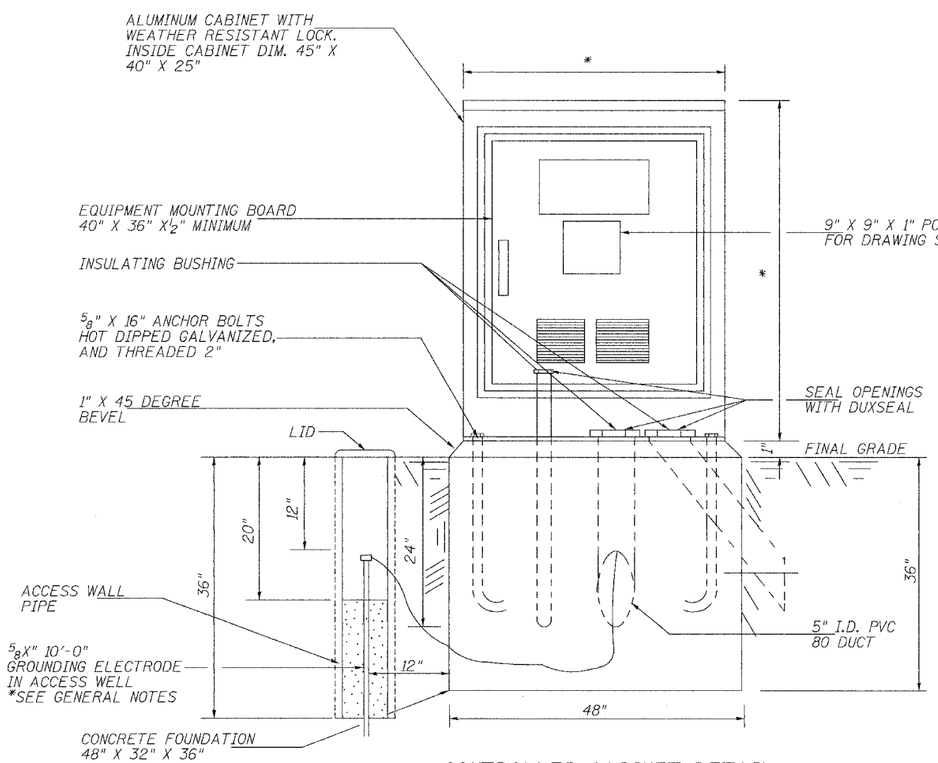

CONTROLLER CABINET DETAIL

FRONT VIEW

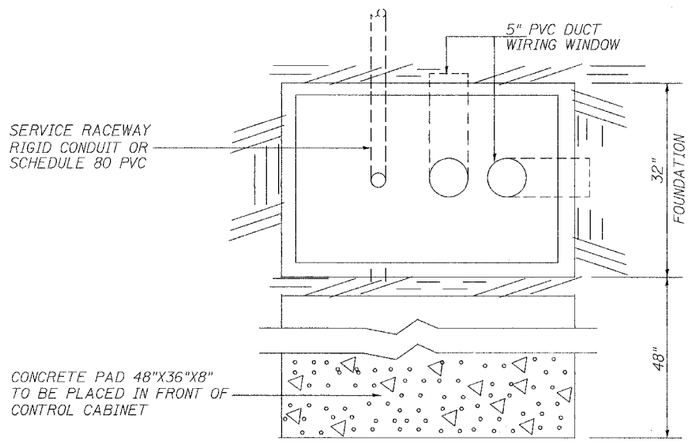

CONTROLLER CABINET BASE DETAIL

FRONT VIEW

* THE COMPLETED CONTROLLER SHALL CONFORM TO THE REQUIREMENTS OUTLINED IN SEC. 1068.01 OF THE STANDARD SPECIFICATIONS FOR A SINGLE DOOR ENCLOSURE.

GENERAL NOTES

SERVICE TO CONTROLLER SHALL BE 120/240 VOLTS, SINGLE PHASE

PROVIDE 1-2 POLE 20 AMP AND 1-1 POLE 20 AMP CIRCUIT BREAKERS FOR LIGHTING AND RECEPTACLE CIRCUITS. ALSO PROVIDE 1-20 AMP 2 POLE AND 2-20 AMP 1 POLE SPARE CIRCUIT BREAKERS.

WIRING IN CABINET SHALL BE SWITCHBOARD TYPE. WIRING TO RUN HORIZONTALLY AND VERTICALLY ALIGNED. LACE OR TIE WRAP WIRES FOR A NEAT AND PROFESSIONAL APPAERANCE.

ALL CONTROL EQUIPMENT TO BE U.L. LISTED.

LABEL PHASE, NEUTRAL AND GROUND TERMINALS.

UNDERGROUND SERVICE ENTRANCE - TOTAL SERVICE FROM TRANSFORMER TO CONTROLLER- NOT TO EXCEED 70 FEET (INCLUDES OVERHEAD AND UNDERGROUND SERVICE).

*REFER TO ARTICLE 825 FOR GROUND ROD ACCESS WELL AND ARTICLE 1087.01 (c) FOR MATERIAL AND SIZE.

CONTROLLER INSTALLATION
FAU ROUTE 6145 OVER
BNSF RAILROAD
SECTION 01-00590-00-BR (COUNTY)
LASALLE COUNTY
STATION 21+75.75
STR. NO. 050-8023

E-6

HUTCHISON ENGINEERING, INC.
JACKSONVILLE & JOLIET, ILLINOIS
Date: 3 /10 /2006

2190L006

ROUTE NO.	SEC.	COUNTY	TOTAL SHEETS	SHEET NO.
FAU 6145	*	LASALLE	168	77
FED. ROAD DIST. NO. 3	ILLINOIS	PROJECT		

ORIGINAL DESIGN WAS H20 (40,00

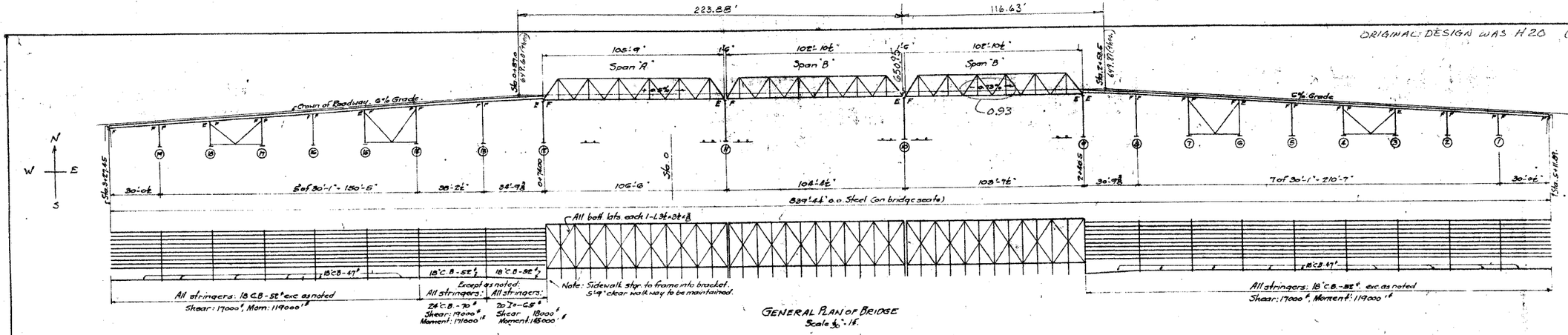

GENERAL PLAN OF BRIDGE
Scale 3/64" = 1'.

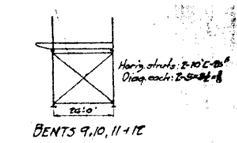

BENTS 9, 10, 11 + 12

E. ABUT CROWN EL 634.40
E. ABUT SEAT 631.88
W. ABUT CROWN 635.20
W. ABUT-SEAT 632.68

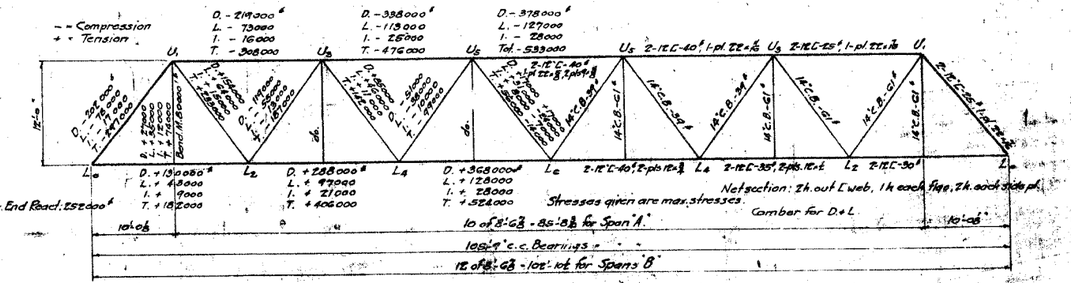

DATA FOR TRUSSES.

LONGITUDINAL BRACING.

BENTS 3, 4, 6, 7, 14, 15, 17 + 18
BENTS 1, 2, 5, 8, 13, 16 + 19 same exc. for longit. bracing conn.

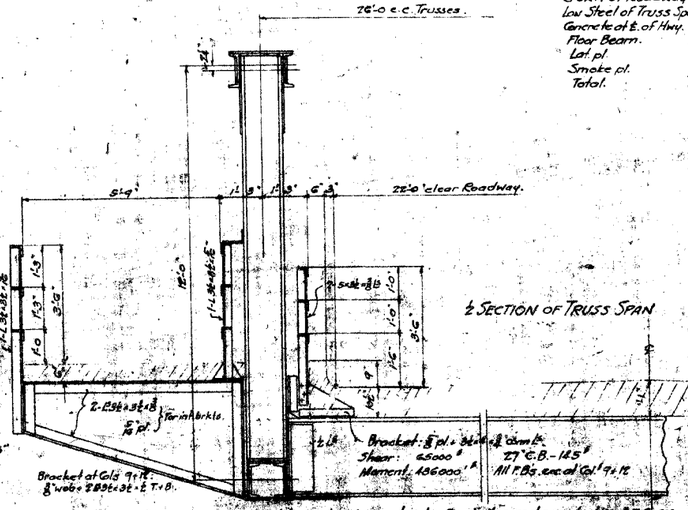

½ SECTION OF TRUSS SPAN

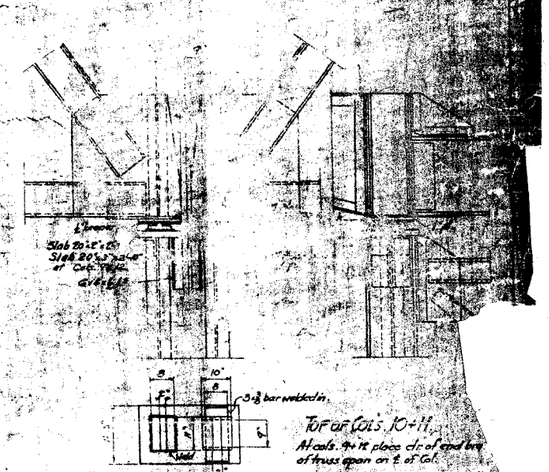

At Col's 9 + 12 place end of end brg. of truss span on ℄ of Col.

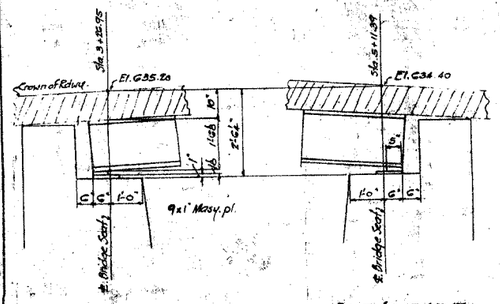

WEST ABUTMENT. EAST ABUTMENT

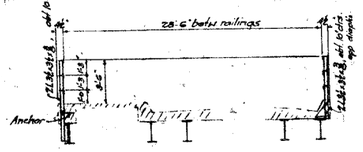

RAILINGS FOR I Bm. SPANS.

All railings, toprail: 4 L 3½×3½×5/16, 3' leaver vertical.
" " , Int. - 1-L 3×2½×5/16
Posts as noted.

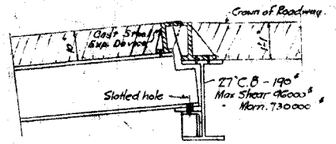

EXP. JOINT AT COL'S 9 + 12.

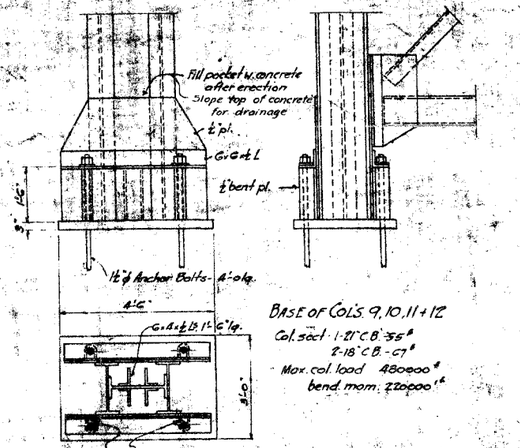

BASE OF COL'S 9, 10, 11 + 12
Col. sect - 1-21 C.B. 55#
2-18 C.B. - 47#
Max. col load 480000#
bend. mom. 220000'#

General Notes.
Specifications: A.R.E.A. for Hy. Bridges 1929 modified by A.T. + S.F. Ry. System.
Dead Load assd: Rdwy. Slab: 3900# per ft. of span.
Sidew. " 500# " " "
Steel 1600# " " truss span.
Live Load: H-20 loading fo. liq. 100# per s.f. for sidew.
Rivets: ⅞ ϕ.
For alterations of column footings + crown of roadway see A.T. + S.F. Ry. plans B.E.S. 2216
Workmanship: Materials + shop work as per A.T. + S.F. Ry. Sys. Specifications for Material + Fabrication of Steel Bridges Form 1928 Std. Jan. 1, 1930. Roamed Mark.
Paint: One coat of boiled linseed oil. No fitting up paint on surfaces in contact. Other surfaces inaccessible after assembly, two coats of red lead.
Reaming: As per Specifications. Form 1928 A. Std. Jan. 1, 1930.

Crown of Roadway to Low Steel of Truss Span
Concrete at ℄ of Hwy. 1'-1"
Floor Beam. 2'-3"
Lat. pl. 0'8
Smoke pl. 3
Total. 5'-7"

B.E.S. 2216
BROADWAY VIADUCT. STREATOR, ILL.

A. T. & S. F. RY. SYSTEM.
2-LANE HIGHWAY VIADUCT.
Correct
R. A. Van Hess
Bridge Engineer System.
AMERICAN BRIDGE CO.
Eng. Dept. Chicago Office.
Scales: 1" = 8'-0" Date June 1930.
Borders 1'-8 1/2 SIZE SHEET Drawing No. C

FREE.

DIETZGEN 119H AGEPROOF

ROUTE NO.	SEC.	COUNTY	TOTAL SHEETS	SHEET NO.
FAU 6145	*	LASALLE	168	78
FED. ROAD DIST. NO. 3	ILLINOIS	PROJECT		

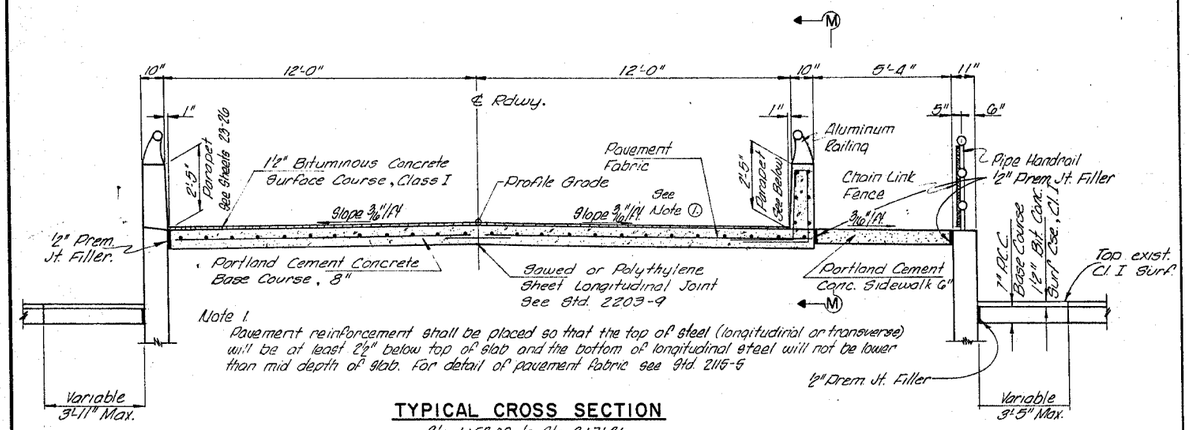

Note 1.
Pavement reinforcement shall be placed so that the top of steel (longitudinal or transverse) will be at least 2½" below top of slab and the bottom of longitudinal steel will not be lower than mid depth of slab. For detail of pavement fabric see Std. 2116-5

TYPICAL CROSS SECTION
Sta. 1+52.00 to Sta. 2+71.26
Sta. 11+18.19 to Sta. 12+26.00

Note: P.C.C. Base Course, 7", Rt & Lt., Station 1+52 to 2+71 only.

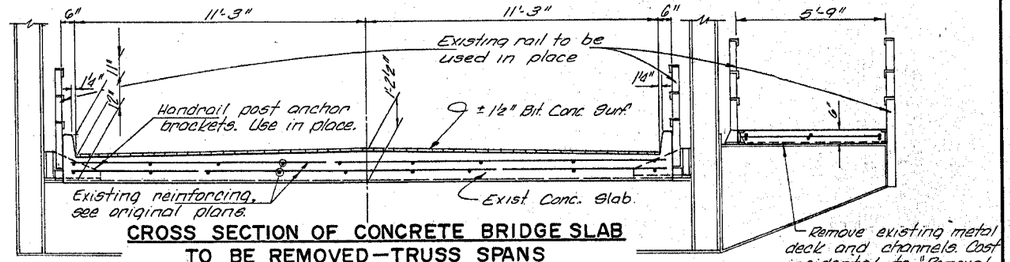

CROSS SECTION OF CONCRETE BRIDGE SLAB TO BE REMOVED—TRUSS SPANS

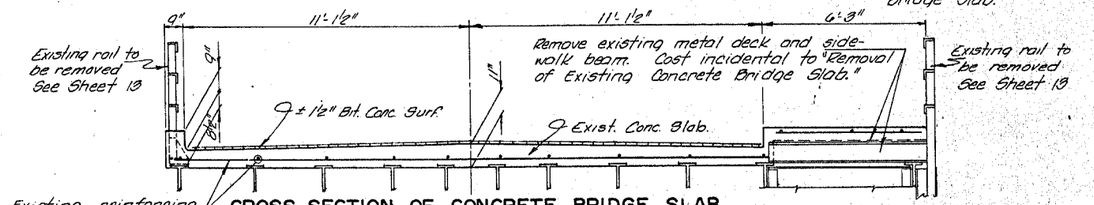

CROSS SECTION OF CONCRETE BRIDGE SLAB TO BE REMOVED — APPROACH SPANS

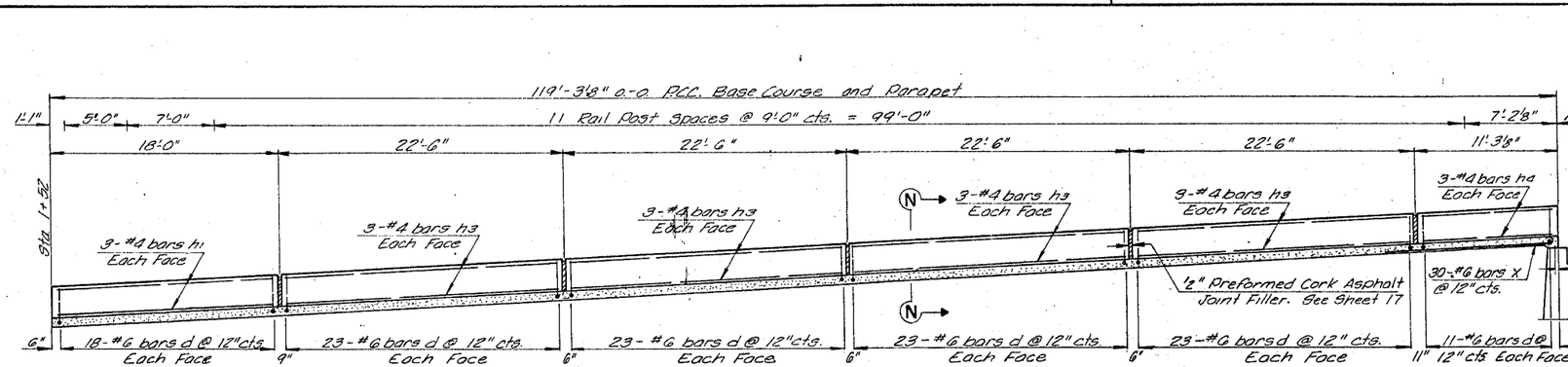

SECTION M-M WEST APPROACH

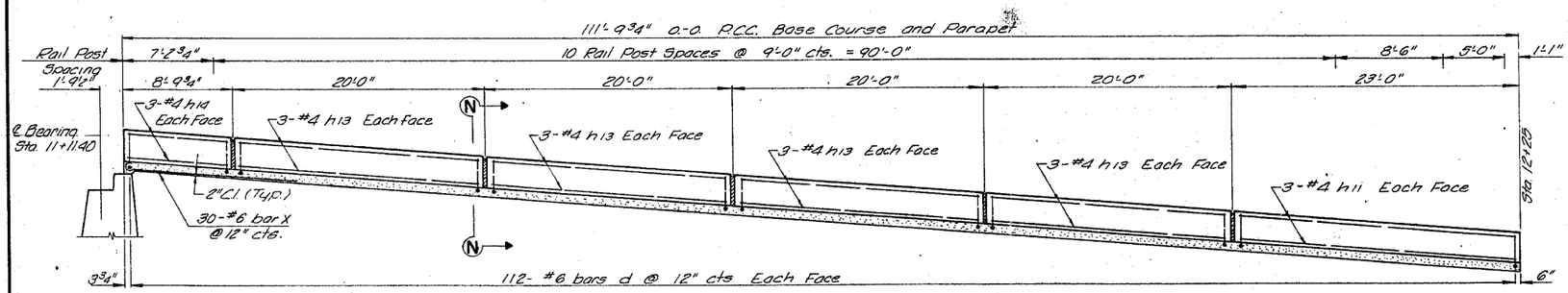

East Abut.

SECTION M-M EAST APPROACH

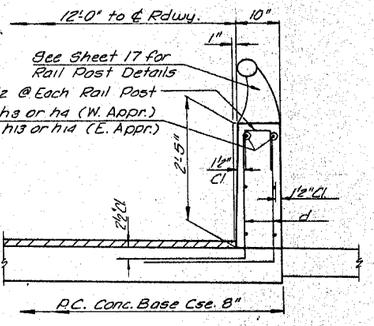

SECTION N-N

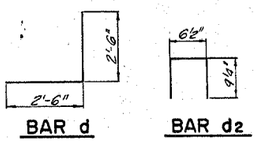

APPROACH PARAPET BILL OF MATERIAL

BAR	NO.	SIZE	LENGTH	SHAPE
d	466	#6	5'-0"	
d2	54	#4	2'-1"	
h1	6	#4	17'-8"	
h3	24	#4	22'-2"	
h4	6	#4	11'-0"	
h11	6	#4	22'-8"	
h13	24	#4	19'-8"	
h14	6	#4	8'-6"	
X	60	#6	14'-0"	
Class X Concrete			Cu Yd	18.2
Reinforcement Bars			Lbs.	5,760

DIETZGEN 188N AGEPROOF®

ROUTE NO.	SEC	COUNTY	TOTAL SHEETS	SHEET NO.
FAU 6145	*	LASALLE	168	79
FED. ROAD DIST. NO. 3	ILLINOIS	PROJECT		

SHEET 6 OF 27

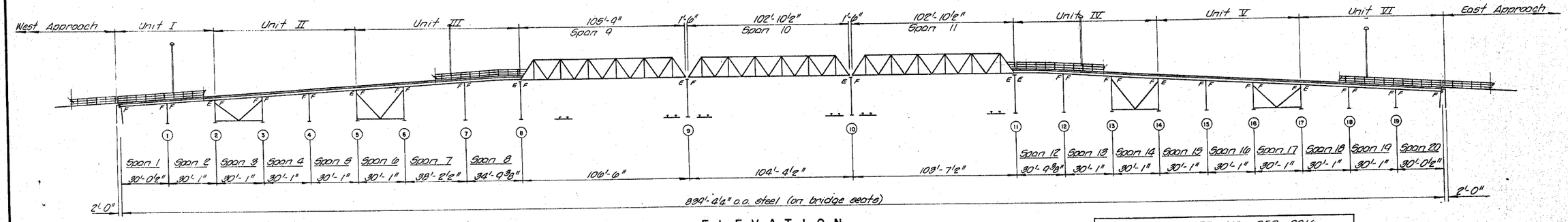

ELEVATION

STRUCTURE NO. 050-8016
BROADWAY STREET VIADUCT
REBUILT 197_ BY
CITY OF STREATOR
SECTION 43B-CS
LOADING HS 15

LETTERING FOR NAME PLATE
See Std 2118-1
See Sheet 25 For Location

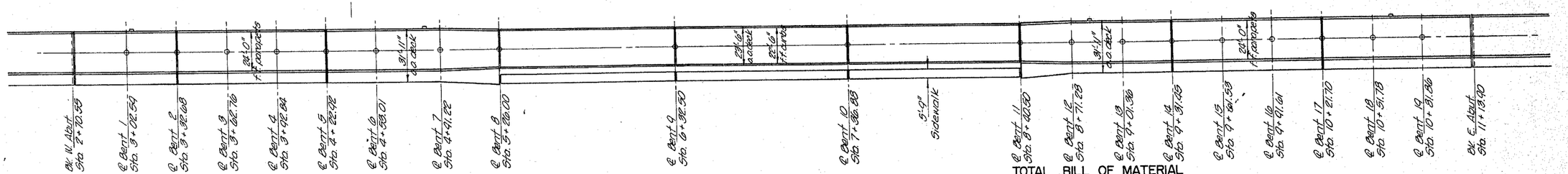

P L A N

INDEX OF SHEETS

6 General Plan and Elevation
7 Superstructure - Unit I
8 Superstructure - Unit II
9 Superstructure - Unit III
10 Superstructure - Span 9
11 Superstructure - Span 10
12 Superstructure - Span 11
13 Superstructure - Unit IV
14 Superstructure - Unit V
15 Superstructure - Unit VI
16 Expansion Details
17 Aluminum Railing
18 Pipe Handrail and Chain Link Fence
19 Abutment Drainage
20 Truss Drainage
21 Bent Repair
22 Pedestal Repair
23 West Abutment
24 West Abutment Details
25 East Abutment
26 East Abutment Details
27 Lighting Details

GENERAL NOTES

All reinforcement bars shall be lapped 24 diameters unless otherwise shown.
It shall be the responsibility of the Contractor to verify all dimensions and conditions existing in the field prior to construction and ordering of materials.
Protective Coat shall not be applied to surfaces to which Waterproofing Membrane System is applied.
Expansion bolts shall consist of self drilling expansion anchors and ¾" ø hooked bolts, extending 9" into the new concrete.

2'-4"

BROADWAY STREET VIADUCT 197_
CITY OF STREATOR

MAYOR THEODORE BAKALAR
CITY CLERK EDWARD NOWOTARSKI
TREASURER EUGENE BEDNAR

COMMISSIONERS
JOHN BODZNICK ART DELL
RICHARD CONNER JOHN HART

CHAMLIN AND ASSOCIATES, INC. CONSULTING ENGINEERS
COLLINS AND RICE, INC. STRUCTURAL ENGINEERS

1'-0⅜"

NAME PLATE, SPECIAL

Material shall conform to Std. 2119-1. Eight lugs at least 3" long shall be cast on back of plate. Letter heights and spaces shall be as shown on Std. 2119-1. See sheet 23 for location.

TOTAL BILL OF MATERIAL

ITEM	UNIT	SUPER	SUB	TOTAL
Bituminous Concrete Surface Course, Cl. I	Ton	188		188
Removal of Existing Concrete Bridge Slab	Lump Sum	1		1
Concrete Removal	Cu. Yd.		19.2	19.2
Expansion Bolts 3/4 Inch	Each		50	50
Bridge Handrail Removal	Lin. Ft.	1,056		1,056
Structure Excavation	Cu. Yd.		440	440
Cast Iron Frames and Grates, Type R-3220	Each	6		6
Cast Iron Frames and Grates, Type R-3135	Each	4		4
Cast Iron Soil Pipe 6"	Lin. Ft.	92		92
Protective Coat	Sq. Yd.	1,536		1,536
Class X Concrete	Cu. Yd.	798.8	235.6	1,034.4
Furnishing and Erecting Structural Steel	Pound	9,040	1,380	10,420
Cleaning and Painting Steel Bridge	Lump Sum			1
Aluminum Railing	Lin. Ft.	1,510		1,510
Pipe Handrail	Lin. Ft.	743		743
Chain Link Fence	Lin. Ft.	1,370		1,370
Reinforcement Bars	Pound	165,310	15,220	180,530
Name Plates	Each	1		1
Preformed Joint Sealer (2½ Inch)	Lin. Ft.	158		158
Preformed Joint Sealer (4 Inch)	Lin. Ft.	90		90
Pedestal Repairs	Lump Sum		1	1
Waterproofing Membrane System	Sq. Yd.	2,174		2,174
Name Plates, Special	Each	1		1
Removal of Existing Walls	Lump Sum		1	1
Porous Granular Embankment	Ton		1,110	1,110

Approximate weight of steel bridge to be cleaned & painted in accordance with Method I of the Standard Specifications.
Trusses = 259 Tons
Approaches & Bents = 311
Total = 570 Tons

DESIGN STRESSES

f_c = 1,200 p.s.i. (Deck Slab)
f_c = 1,000 p.s.i. (Wings)
f_s = 20,000 p.s.i. (Reinforcement)
f_s = 20,000 p.s.i. (New Structural) (A-36)
v = 75 p.s.i. (Footing)
n = 10
LOADING HS 20-44 (R.C. Slab Only)

STATE OF ILLINOIS — REGISTERED — FRED J. STONE JR. — 2934 — STRUCTURAL ENGINEER

Fred J. Stone Jr.
Illinois Structural No. 2934

GENERAL PLAN & ELEVATION
BROADWAY STREET VIADUCT
SECTION 43B-CS
CITY OF STREATOR
LASALLE COUNTY

DESIGNED F.S. CHECKED W.N.B
DRAWN A.C. DATE 7-3-75 NO. 970

1415

DIETZGEN 18IH AGEPROOF

ROUTE NO.	SEC	COUNTY	TOTAL SHEETS	SHEET NO.
FAU 6145	*	LASALLE	168	80
FED. ROAD DIST. NO. 3	ILLINOIS	PROJECT		

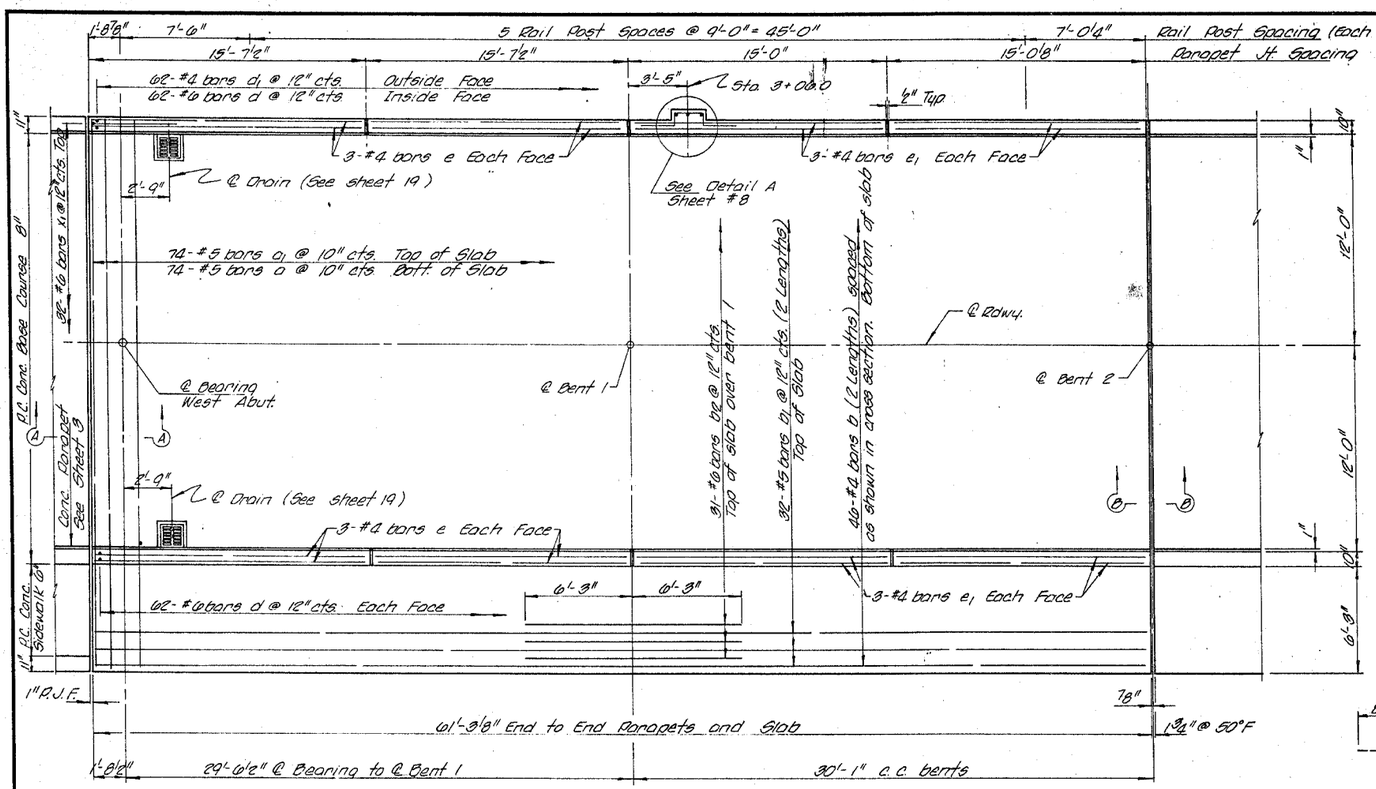

PLAN - UNIT I

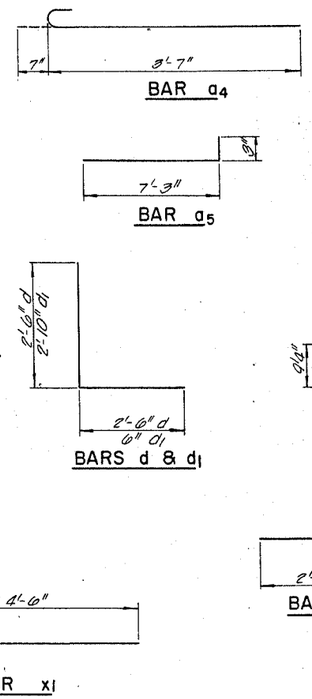

BAR x1

BAR a4

BAR a5

BARS d & d1

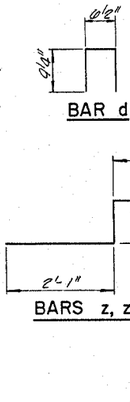

BAR d2

BARS z, z1 & z2

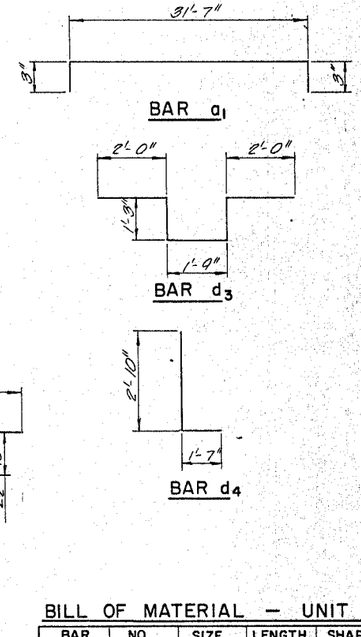

BAR a1

BAR d3

BAR d4

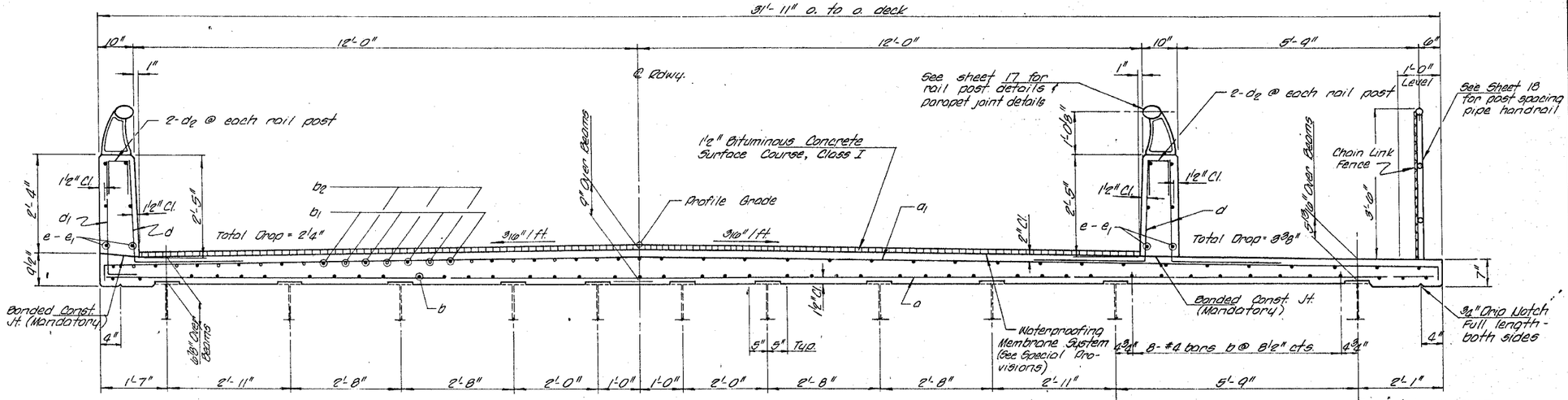

NEAR BENT 1 NEAR MIDSPAN

CROSS SECTION UNIT I

Unit II, V & VI Similar

BILL OF MATERIAL - UNIT I

BAR	NO.	SIZE	LENGTH	SHAPE
b	74	#5	31'-7"	——
b1	74	#5	32'-1"	⊓
b	92	#4	31'-0"	——
b1	64	#5	31'-2"	——
b2	31	#6	12'-6"	——
d	186	#6	5'-0"	L
d1	62	#4	3'-4"	L
d2	28	#4	2'-1"	⊔
d3	5	#6	8'-3"	⊔
d4	3	#6	4'-5"	L
e	62	#4	15'-4"	——
e1	29	#4	14'-9"	——
x1	32	#6	5'-2"	C
Class X Concrete			Cu. Yd.	58.9
Reinforcement Bars			Pound	11,870
Protective Coat			Sq. Yd.	102

For Section A-A & B-B see sheet 16.

SUPERSTRUCTURE - UNIT I

BROADWAY STREET VIADUCT

SECTION 43B-CS

CITY OF STREATOR

LASALLE COUNTY

DESIGNED F.S. CHECKED W.S.

DRAWN A.O. DATE 7-3-75 NO. 970

B.M. #115: Railroad Spike in Power Pole at Northwest Quadrant of Shabbona St. and Broadway St. Elevation Taken From Streator BM's 3/1989, 23.41' Lt., Sta. 16+01.55, Elev. 628.51

B.M. #116: Railroad Spike in Power Pole at Northwest Quadrant of Iowa St. and Broadway St. Elevation Taken From Streator BM's 3/1989, 39.84' Lt., Sta. 27+53.58, Elev. 627.48

EXISTING STRUCTURE:

SN 050-8016, The existing bridge was built in 1930 and reconstructed in 1976. The structure consists of 20 spans, 843' back to back abutments with 22'-6' min. roadway width and one 5'-9' sidewalk. Approaches to the bridge consist of concrete retaining walls 119' long on the West and 112' on the East.

Existing Bridge and retaining wall to be Removed by the Contractor. Traffic will be Detoured. No Salvage.

VERTICAL CLEARANCE TABLE

	Track Number	1	2	3	4	5	6	7	8	9	10
	Station (Broadway St.)	21+24.9	21+36.9	21+56.8	21+71.4	21+99.6	22+27.5	22+64.2	22+77.8	23+17.3	23+43.0
	Low Beam Elevation	649.0	649.4	649.8	650.0	650.3	650.2	649.9	649.7	648.2	647.2
	T/R Elevation	624.41	624.41	624.49	624.25	624.49	625.18	624.55	624.66	624.47	624.10
**	Vertical Clearance (Ft.)	24.5	24.9	25.3	25.7	25.8	25.0	25.3	25.0	23.7	23.1

** ℄ Clearances in table are calculated from centerline of track to estimated low steel elevation.

ROUTE NO.	SEC	COUNTY	TOTAL SHEETS	SHEET NO.
FAU 6145	*	LASALLE	168	81
FED. ROAD DIST. NO. 3	ILLINOIS	PROJECT		

SHEET NO. 1 41 SHEETS

* 01-00590-00-BR (County)

CONTRACT NO. 87293

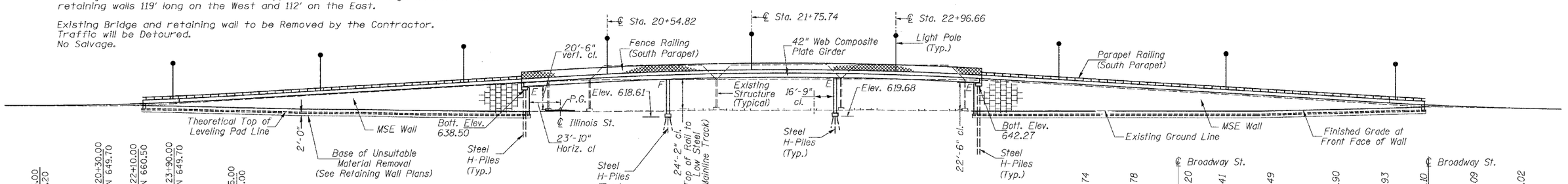

ELEVATION

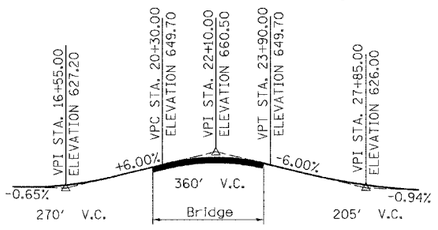

PROPOSED PROFILE GRADE BROADWAY ST.

CURVE DATA ILLINOIS STREET

P.I. Sta. = 90+00.00
Δ = 4° 47' 31" (Lt)
D = 2° 53' 27"
R = 1,981.98'
T = 82.93'
L = 165.76'
E = 1.73'
P.C. Sta. = 89+17.07
P.T. Sta. = 90+82.83
S.E. = Normal Crown

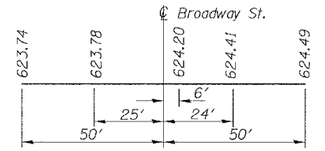

EXISTING PROFILE TRACK 1 (Looking East)

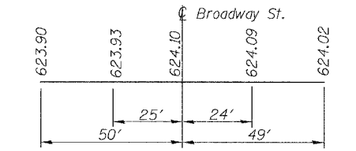

EXISTING PROFILE TRACK 10 (Looking East)

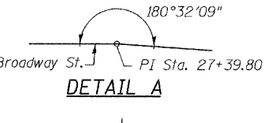

DETAIL A

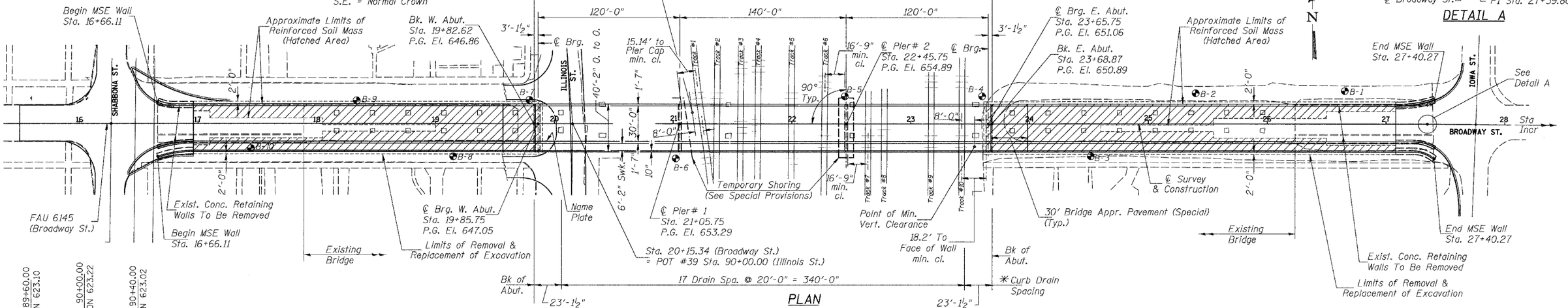

PLAN

Mile Post 89.41

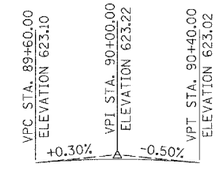

PROPOSED PROFILE GRADE ILLINOIS ST.

SKEW ANGLES FROM ℄ TRACK TO LINE ⊥ TO ℄ ROADWAY

TRACK NO.	STATION	ANGLE	DIRECTION
Track #1	21+24.93	8° 08' 11"	Left
Track #2	21+36.87	0° 33' 56"	Right
Track #3	21+56.67	0° 32' 45"	Right
Track #4	21+71.28	0° 32' 10"	Right
Track #5	21+99.67	0° 19' 54"	Right
Track #6	22+27.36	0° 36' 45"	Right
Track #7	22+64.12	0° 18' 43"	Right
Track #8	22+77.72	0° 15' 51"	Right
Track #9	23+17.16	0° 19' 03"	Right
Track #10	23+43.00	0° 07' 12"	Right

DESIGNED	JOH
CHECKED	BRT
DRAWN	TC
CHECKED	JOH

2190b001

DESIGN STRESSES

(FIELD UNITS)

f'c = 3,500 p.s.i.
fy = 60,000 p.s.i. (Reinforcement)
fy = 50,000 p.s.i. (Structural Steel)
(AASHTO M270 Grade 50W)

SEISMIC DATA

Seismic Performance Category (SPC) = A
Bedrock Acceleration Coefficient (A) = 0.040g
Site Coefficient (S) = 1.0

DESIGN SPECIFICATIONS

2002 AASHTO

LOADING HS20-44

Allow 50#/sq. ft. future wearing surface.

* Drains are 3" PVC pipe through curb for sidewalk drainage onto bridge deck. See Sheet #10 of 41.

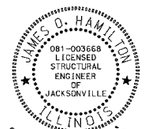

James O. Hamilton
3/10/2006
License Expires 11/30/2006

I certify that to the best of my knowledge, information and belief, this bridge design is structurally adequate for the design loading shown on the plans. The design is an economical one for the style of structure and complies with requirements of the current AASHTO Standard Specification for Highway Bridges. This design complies with all requirements of the current AASHTO Guide Specifications for Seismic Design of highway bridges.

James O. Hamilton
Illinois Structural No. 3668
Expires 11/30/2006

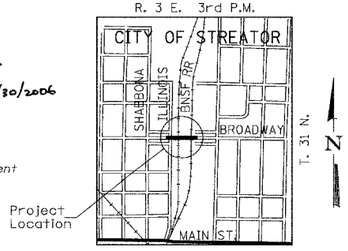

LOCATION SKETCH

GENERAL PLAN DETAILS
FAU ROUTE 6145 OVER BNSF RAILROAD
SECTION 01-00590-00-BR (COUNTY)
LASALLE COUNTY
STATION 21+75.75
STR. NO. 050-8023

HUTCHISON ENGINEERING, INC.
JACKSONVILLE & JOLIET, ILLINOIS
Date: 3 /10 /2006

I:\civil\pc\2190b001.dgn 03/13/2006 10:13:10 AM

ROUTE NO.	SEC	COUNTY	TOTAL SHEETS	SHEET NO.
FAU 6145	*	LASALLE	168	82
FED. ROAD DIST. NO. 3	ILLINOIS	PROJECT		

SHEET NO. 2
41 SHEETS

* 01-00590-00-BR (County)

CONTRACT NO. 87293

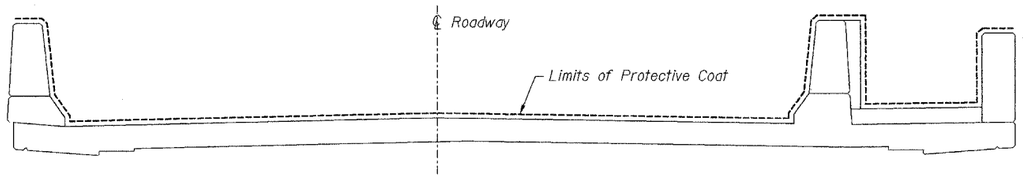

BRIDGE DECK SECTION
(Showing Protective Coat Limits)

BUILT: 200_ BY
LASALLE COUNTY
SEC. 01-00590-00-BR
F.A.U. RT. 6145
STATION 21+75.75
STR. NO. 050-8023
LOADING HS20

NAME PLATE
(See Std. 515001)

BRIDGE PLANS INDEX TO SHEETS

SHEET #'s	DESCRIPTION
1	General Plan
2	General Plan Details
3	Top of Slab Elevations and Deck Pouring Sequence
4 & 5	Top of Slab Elevations
6	Superstructure
7 - 11	Superstructure Details
12	Structural Steel Framing Plan
13	Structural Steel Details
14-16	Bearing Details
17	Abutment and Wall Details
18	West Abutment
19	East Abutment
20	Pier 1 Details
21	Pier 2 Details
22	Bridge Fence Railing
23	Parapet Railing
24	Anchor Bolt Details
25	Bar Splicer Assembly
26-27	Preformed Joint System
28	Neoprene Expansion Joint
29	Bridge Approach Pavement (Special)
30-41	Boring Logs

Bridge joint System (Expansion) $1\frac{5}{8}$" @ W. Abut.
4" Neoprene Exp. Jt. @ E. Abut.

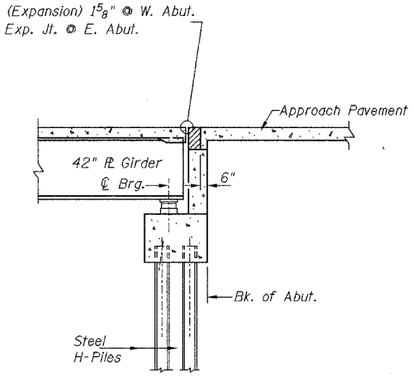

SECTION THRU ABUTMENT @ Rt. L's

GENERAL NOTES

Calculated weight of Structural Steel = 499,840 lbs. (AASHTO M270, Grade 50W).

The existing structural steel coating contains lead. The Contractor shall take appropriate precautions to deal with the presence of lead on this project.

All structural steel shall be AASHTO M 270 Grade 50W (except expansion joint plates and attached bars which shall be AASHTO M 270 Grade 50).

Expansion joint plates and attached bars shall be shop painted with the inorganic zinc rich primer.

The structural steel bearing plates of the Elastomeric Bearing Assembly shall conform to the requirements of AASHTO M 270 Grade 50W.

The main load carrying member components subject to tensile stress shall conform to the Supplemental Requirements for Notch Toughness Zone 2. These components are tension flanges, web and all splice plate material except fill plates.

Reinforcement bars shall conform to the requirements of AASHTO M31 or M322 Grade 60.

The contractor shall drive four (4) steel test piles in permanent locations, one at the east abutment, one at the west abutment, one at pier #1, and one at pier #2, as directed by the Engineer before ordering the remainder of piles.

Fasteners shall be high strength bolts (AASHTO M 164, Type 3 in unpainted areas and mechanically galvanized AASHTO M 164, Type 1 or 2 in painted areas). Bolts $\frac{7}{8}$"Φ, open holes $\frac{15}{16}$"Φ, unless otherwise noted.

Field welding of construction accessories will not be permitted to beams.

Anchor bolts shall be set before bolting diaphragms over supports.

Bearing seat surfaces shall be constructed or adjusted to the designated elevations within a tolerance of $\frac{1}{8}$ inch. Adjustment shall be made either by grinding the surface or by shimming the bearing. Two $\frac{1}{8}$'' adjusting shims, of the dimensions of the bottom bearing plate, shall be provided for each bearing in addition to all other plates or shims. For Type I Elastomeric Bearings, two $\frac{1}{8}$'' adjusting shims shall be provided for each bearing and placed as detailed.

Bridge Seat Sealer shall be applied to the seat area of the abutments and piers.

AASHTO M 270 Grade 50W structural steel shall only be painted, for a distance of three times the depth of the beams or girders (but not exceeding 10 feet) each way from the deck joints and each way from ℄ of piers. The exterior face and bottom flange of the outside girders shall be painted the full length of bridge. All structural steel shall be cleaned as specified in the special provision for "Surface Preparation and Painting Requirements for Weathering Steel".

The inorganic zinc rich primer/Acrylic/Acrylic Paint System shall be used for shop and field painting of new structural steel except where otherwise noted. The color of the final finish coat shall be Reddish Brown, Munsell No. 2.5YR 3/4. See Special Provisions for "Cleaning and Painting New Metal Structures.

All construction joints shall be bonded.

The sidewalk surface of the bridge shall be finished according to Article 503.17(d) of the Standard Specifications. Sidewalk elevations and profile shall be adjusted to comply with the Illinois Accessibility Code (ADA) requirements. Cost included with Concrete Superstructure.

TOTAL BILL OF MATERIAL

ITEM	UNIT	SUPER	SUB	TOTAL
Removal of Existing Structures	L SUM			1
Concrete Superstructure	CU YD	554.0	——	554.0
Concrete Structures	CU YD	——	260.5	260.5
Reinforcement Bars, Epoxy Coated	POUND	125,510	36,050	161,560
Furnishing and Erecting Structural Steel	L SUM	1	——	1
Neoprene Expansion Joint (4")	FOOT	39	——	39
Bridge Joint System (Expansion) $1\frac{5}{8}$"	FOOT	39	——	39
Protective Coat	SQ YD	2,090	——	2,090
Stud Shear Connectors	EACH	4,590	——	4,590
Elastomeric Bearing Assembly, Type I	EACH	6	——	6
Elastomeric Bearing Assembly, Type II	EACH	6	——	6
Floating Bearings, Guided Expansion 350 k	EACH	6	——	6
Floating Bearings, Fixed 350 k	EACH	6	——	6
Structure Excavation	CU YD	——	125	125
Name Plates	EACH	1	——	1
Furnishing Steel Piles HP 12x53	FOOT	——	2,368	2,368
Driving Steel Piles	FOOT	——	2,368	2,368
Test Pile Steel HP 12x53	EACH	——	4	4
Bridge Seat Sealer	SQ FT	——	535	535
Bar Splicers	EACH	832	76	908
Bridge Fence Railing	FOOT	380	——	380
Parapet Railing	FOOT	380	——	380
Bridge Deck Grooving	SQ YD	1,188	——	1,188

DESIGNED	JOH
CHECKED	BRT
DRAWN	TD
CHECKED	JOH

21905002

GENERAL PLAN DETAILS
FAU ROUTE 6145 OVER BNSF RAILROAD
SECTION 01-00590-00-BR (COUNTY)
LASALLE COUNTY
STATION 21+75.75
STR. NO. 050-8023

HUTCHISON ENGINEERING, INC.
JACKSONVILLE & JOLIET, ILLINOIS
Date: 3 /10 /2006

Structures\21905002.dgn 01/14/2006 10:06:31 AM

ROUTE NO.	SEC	COUNTY	TOTAL SHEETS	SHEET NO.
FAU 6145	*	LASALLE	168	83
FED. ROAD DIST. NO. 3	ILLINOIS	PROJECT		

SHEET NO. 3
41 SHEETS

* 01-00590-00-BR (County)

CONTRACT NO. 87293

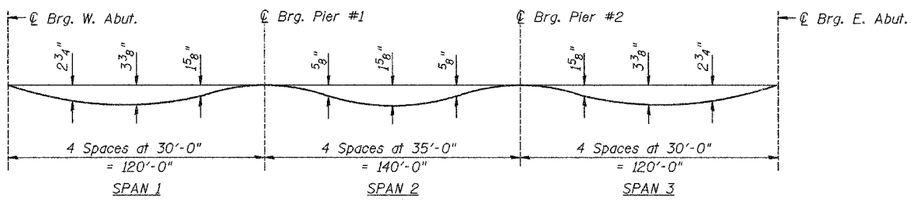

DEAD LOAD DEFLECTION DIAGRAM

(Includes weight of concrete only)

Note: The above deflections are not to be used in the field if the engineer is working from the grade elevations adjusted for dead load deflections as shown in the tables on sheets 4 and 5 of 41.

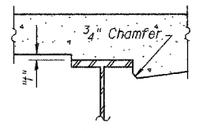

At Minimum Fillet

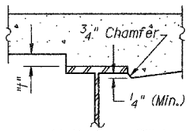

At Maximum Fillet

To determine "t": After all structural steel has been erected, elevations of the top flanges of the beams shall be taken at intervals shown on this sheet. These elevations subtracted from the "Theoretical Grade Elevations Adjusted for Dead Load Deflections" minus slab thickness, equals the fillet heights "t" above top flanges of girders.

FILLET HEIGHTS

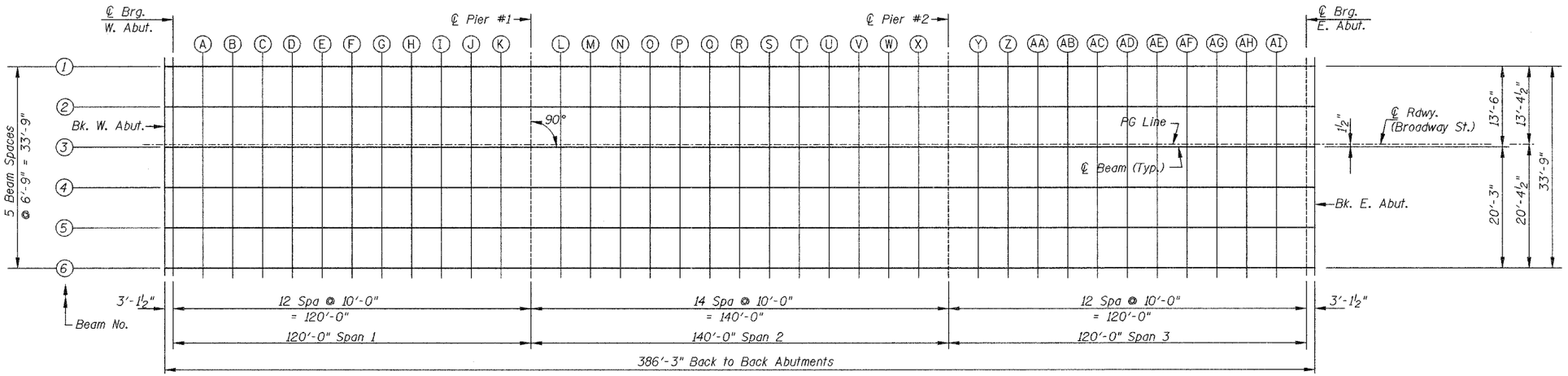

PLAN (DECK ELEVATIONS)

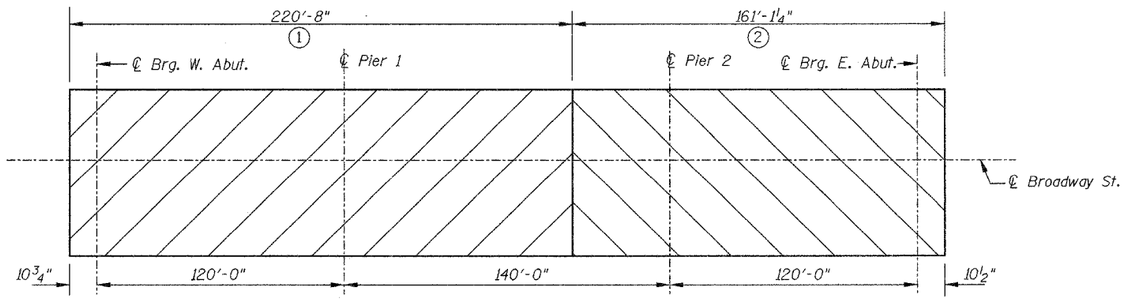

DECK POURING SEQUENCE

Notes:
The concrete deck slab segments shall be poured in numerical order as shown here. When the deck pour is stopped for the day at one or more of the Transverse Bonded Construction Joints in the deck pouring sequence as shown, the next pour shall not be made until both of the following requirements are met:
1: At least 72 hours shall have elapsed from the end of the previous pour.
2: The concrete strength shall have attained a minimum modulus of rupture of 650 psi or a minimum compressive strength of 3500 psi.

DESIGNED	JOH
CHECKED	BRT
DRAWN	TAC
CHECKED	JOH

N

TOP OF SLAB ELEVATIONS AND DECK POURING SEQUENCES FAU ROUTE 6145 OVER BNSF RAILROAD SECTION 01-00590-00-BR (COUNTY) LASALLE COUNTY STATION 21+75.75 STR. NO. 050-8023

HUTCHISON ENGINEERING, INC.
JACKSONVILLE & JOLIET, ILLINOIS
Date: 3 /10 /2006

2190b003

ROUTE NO.	SEC	COUNTY	TOTAL SHEETS	SHEET NO.
FAU 6145	*	LASALLE	168	84
FED. ROAD DIST. NO. 3	ILLINOIS	PROJECT		

SHEET NO. 4
41 SHEETS

* 01-00590-00-BR (County)

CONTRACT NO. 87293

BEAM #1

Location	Station	Offset	Theoretical Grade Elevations	Theoretical Grade Elevations Adjusted For Dead Load Deflection
BK W ABUT	1982.620	-13.375	646.646	646.646
CL BRG W ABUT	1985.750	-13.375	646.834	646.834
A	1995.750	-13.375	647.434	647.522
B	2005.750	-13.375	648.034	648.202
C	2015.750	-13.375	648.634	648.866
D	2025.750	-13.375	649.234	649.507
E	2035.750	-13.375	649.829	650.118
F	2045.750	-13.375	650.393	650.674
G	2055.750	-13.375	650.924	651.173
H	2065.750	-13.375	651.421	651.620
I	2075.750	-13.375	651.885	652.023
J	2085.750	-13.375	652.316	652.391
K	2095.750	-13.375	652.714	652.738
CL Pier 1	2105.750	-13.375	653.078	653.078
L	2115.750	-13.375	653.409	653.398
M	2125.750	-13.375	653.706	653.712
N	2135.750	-13.375	653.970	654.008
O	2145.750	-13.375	654.201	654.275
P	2155.750	-13.375	654.399	654.504
Q	2165.750	-13.375	654.563	654.689
R	2175.750	-13.375	654.694	654.828
S	2185.750	-13.375	654.791	654.918
T	2195.750	-13.375	654.855	654.961
U	2205.750	-13.375	654.886	654.960
V	2215.750	-13.375	654.884	654.921
W	2225.750	-13.375	654.848	654.854
X	2235.750	-13.375	654.779	654.768
CL Pier 2	2245.750	-13.375	654.676	654.676
Y	2255.750	-13.375	654.540	654.565
Z	2265.750	-13.375	654.371	654.446
AA	2275.750	-13.375	654.169	654.306
AB	2285.750	-13.375	653.933	654.131
AC	2295.750	-13.375	653.664	653.913
AD	2305.750	-13.375	653.361	653.642
AE	2315.750	-13.375	653.025	653.315
AF	2325.750	-13.375	652.656	652.929
AG	2335.750	-13.375	652.254	652.485
AH	2345.750	-13.375	651.818	651.986
AI	2355.750	-13.375	651.349	651.437
CL BRG E ABUT	2365.750	-13.375	650.846	650.846
BK E ABUT	2368.870	-13.375	650.683	650.683

BEAM #2

Location	Station	Offset	Theoretical Grade Elevations	Theoretical Grade Elevations Adjusted For Dead Load Deflection
BK W ABUT	1982.620	-6.625	646.754	646.754
CL BRG W ABUT	1985.750	-6.625	646.942	646.942
A	1995.750	-6.625	647.542	647.630
B	2005.750	-6.625	648.142	648.310
C	2015.750	-6.625	648.742	648.973
D	2025.750	-6.625	649.342	649.615
E	2035.750	-6.625	649.936	650.226
F	2045.750	-6.625	650.500	650.781
G	2055.750	-6.625	651.031	651.280
H	2065.750	-6.625	651.529	651.727
I	2075.750	-6.625	651.993	652.130
J	2085.750	-6.625	652.424	652.499
K	2095.750	-6.625	652.821	652.845
CL Pier 1	2105.750	-6.625	653.185	653.185
L	2115.750	-6.625	653.516	653.505
M	2125.750	-6.625	653.814	653.820
N	2135.750	-6.625	654.078	654.116
O	2145.750	-6.625	654.309	654.382
P	2155.750	-6.625	654.506	654.611
Q	2165.750	-6.625	654.670	654.797
R	2175.750	-6.625	654.801	654.935
S	2185.750	-6.625	654.899	655.025
T	2195.750	-6.625	654.963	655.068
U	2205.750	-6.625	654.994	655.067
V	2215.750	-6.625	654.991	655.029
W	2225.750	-6.625	654.955	654.961
X	2235.750	-6.625	654.886	654.875
CL Pier 2	2245.750	-6.625	654.784	654.784
Y	2255.750	-6.625	654.648	654.672
Z	2265.750	-6.625	654.479	654.554
AA	2275.750	-6.625	654.276	654.414
AB	2285.750	-6.625	654.040	654.239
AC	2295.750	-6.625	653.771	654.020
AD	2305.750	-6.625	653.469	653.749
AE	2315.750	-6.625	653.133	653.422
AF	2325.750	-6.625	652.764	653.037
AG	2335.750	-6.625	652.361	652.593
AH	2345.750	-6.625	651.925	652.093
AI	2355.750	-6.625	651.456	651.544
CL BRG E ABUT	2365.750	-6.625	650.954	650.954
BK E ABUT	2368.870	-6.625	650.790	650.790

℄ ROADWAY

Location	Station	Offset	Theoretical Grade Elevations	Theoretical Grade Elevations Adjusted For Dead Load Deflection
BK W ABUT	1982.620	0.000	646.857	646.857
CL BRG W ABUT	1985.750	0.000	647.045	647.045
A	1995.750	0.000	647.645	647.733
B	2005.750	0.000	648.245	648.413
C	2015.750	0.000	648.845	649.077
D	2025.750	0.000	649.445	649.718
E	2035.750	0.000	650.039	650.329
F	2045.750	0.000	650.604	650.884
G	2055.750	0.000	651.134	651.383
H	2065.750	0.000	651.632	651.831
I	2075.750	0.000	652.096	652.234
J	2085.750	0.000	652.527	652.602
K	2095.750	0.000	652.924	652.949
CL Pier 1	2105.750	0.000	653.289	653.289
L	2115.750	0.000	653.619	653.609
M	2125.750	0.000	653.917	653.923
N	2135.750	0.000	654.181	654.219
O	2145.750	0.000	654.412	654.486
P	2155.750	0.000	654.609	654.715
Q	2165.750	0.000	654.774	654.900
R	2175.750	0.000	654.904	655.039
S	2185.750	0.000	655.002	655.129
T	2195.750	0.000	655.066	655.171
U	2205.750	0.000	655.097	655.171
V	2215.750	0.000	655.094	655.132
W	2225.750	0.000	655.059	655.065
X	2235.750	0.000	654.989	654.979
CL Pier 2	2245.750	0.000	654.887	654.887
Y	2255.750	0.000	654.751	654.776
Z	2265.750	0.000	654.582	654.657
AA	2275.750	0.000	654.379	654.517
AB	2285.750	0.000	654.144	654.342
AC	2295.750	0.000	653.874	654.123
AD	2305.750	0.000	653.572	653.853
AE	2315.750	0.000	653.236	653.526
AF	2325.750	0.000	652.867	653.140
AG	2335.750	0.000	652.464	652.696
AH	2345.750	0.000	652.029	652.197
AI	2355.750	0.000	651.559	651.648
CL BRG E ABUT	2365.750	0.000	651.057	651.057
BK E ABUT	2368.870	0.000	650.893	650.893

BEAM #3

Location	Station	Offset	Theoretical Grade Elevations	Theoretical Grade Elevations Adjusted For Dead Load Deflection
BK W ABUT	1982.620	0.125	646.855	646.855
CL BRG W ABUT	1985.750	0.125	647.043	647.043
A	1995.750	0.125	647.643	647.731
B	2005.750	0.125	648.243	648.411
C	2015.750	0.125	648.843	649.075
D	2025.750	0.125	649.443	649.716
E	2035.750	0.125	650.038	650.327
F	2045.750	0.125	650.602	650.883
G	2055.750	0.125	651.133	651.381
H	2065.750	0.125	651.630	651.829
I	2075.750	0.125	652.094	652.232
J	2085.750	0.125	652.525	652.600
K	2095.750	0.125	652.923	652.947
CL Pier 1	2105.750	0.125	653.287	653.287
L	2115.750	0.125	653.618	653.607
M	2125.750	0.125	653.915	653.921
N	2135.750	0.125	654.179	654.217
O	2145.750	0.125	654.410	654.484
P	2155.750	0.125	654.608	654.713
Q	2165.750	0.125	654.772	654.898
R	2175.750	0.125	654.903	655.037
S	2185.750	0.125	655.000	655.127
T	2195.750	0.125	655.064	655.170
U	2205.750	0.125	655.095	655.169
V	2215.750	0.125	655.093	655.130
W	2225.750	0.125	655.057	655.063
X	2235.750	0.125	654.988	654.977
CL Pier 2	2245.750	0.125	654.885	654.885
Y	2255.750	0.125	654.749	654.774
Z	2265.750	0.125	654.580	654.655
AA	2275.750	0.125	654.378	654.515
AB	2285.750	0.125	654.142	654.340
AC	2295.750	0.125	653.873	654.121
AD	2305.750	0.125	653.570	653.851
AE	2315.750	0.125	653.234	653.524
AF	2325.750	0.125	652.865	653.138
AG	2335.750	0.125	652.463	652.694
AH	2345.750	0.125	652.027	652.195
AI	2355.750	0.125	651.558	651.646
CL BRG E ABUT	2365.750	0.125	651.055	651.055
BK E ABUT	2368.870	0.125	650.891	650.891

DESIGNED	JOH
CHECKED	BRT
DRAWN	TC
CHECKED	JOH

TOP OF SLAB ELEVATIONS
FAU ROUTE 6145 OVER
BNSF RAILROAD
SECTION 01-00590-00-BR (COUNTY)
LASALLE COUNTY
STATION 21+75.75
STR. NO. 050-8023

HUTCHISON ENGINEERING, INC.
JACKSONVILLE & JOLIET, ILLINOIS

Date: 3 /10 /2006

2190b004

ROUTE NO.	SEC	COUNTY	TOTAL SHEETS	SHEET NO.
FAU 6145	*	LASALLE	168	85
FED. ROAD DIST. NO. 3	ILLINOIS	PROJECT		

SHEET NO. 5
41 SHEETS

* 01-00590-00-BR (County)

CONTRACT NO. 87293

BEAM #4

Location	Station	Offset	Theoretical Grade Elevations	Theoretical Grade Elevations Adjusted For Dead Load Deflection
BK W ABUT	1982.620	6.875	646.750	646.750
CL BRG W ABUT	1985.750	6.875	646.938	646.938
A	1995.750	6.875	647.538	647.626
B	2005.750	6.875	648.138	648.306
C	2015.750	6.875	648.738	648.969
D	2025.750	6.875	649.338	649.611
E	2035.750	6.875	649.932	650.222
F	2045.750	6.875	650.496	650.777
G	2055.750	6.875	651.027	651.276
H	2065.750	6.875	651.525	651.723
I	2075.750	6.875	651.989	652.126
J	2085.750	6.875	652.420	652.495
K	2095.750	6.875	652.817	652.842
CL Pier 1	2105.750	6.875	653.181	653.181
L	2115.750	6.875	653.512	653.501
M	2125.750	6.875	653.810	653.816
N	2135.750	6.875	654.074	654.112
O	2145.750	6.875	654.305	654.378
P	2155.750	6.875	654.502	654.607
Q	2165.750	6.875	654.666	654.793
R	2175.750	6.875	654.797	654.931
S	2185.750	6.875	654.895	655.021
T	2195.750	6.875	654.959	655.064
U	2205.750	6.875	654.990	655.063
V	2215.750	6.875	654.987	655.025
W	2225.750	6.875	654.951	654.957
X	2235.750	6.875	654.882	654.871
CL Pier 2	2245.750	6.875	654.780	654.780
Y	2255.750	6.875	654.644	654.668
Z	2265.750	6.875	654.475	654.550
AA	2275.750	6.875	654.272	654.410
AB	2285.750	6.875	654.036	654.235
AC	2295.750	6.875	653.767	654.016
AD	2305.750	6.875	653.465	653.745
AE	2315.750	6.875	653.129	653.418
AF	2325.750	6.875	652.760	653.033
AG	2335.750	6.875	652.357	652.589
AH	2345.750	6.875	651.921	652.090
AI	2355.750	6.875	651.452	651.540
CL BRG E ABUT	2365.750	6.875	650.950	650.950
BK E ABUT	2368.870	6.875	650.786	650.786

BEAM #5

Location	Station	Offset	Theoretical Grade Elevations	Theoretical Grade Elevations Adjusted For Dead Load Deflection
BK W ABUT	1982.620	13.625	646.641	646.641
CL BRG W ABUT	1985.750	13.625	646.829	646.829
A	1995.750	13.625	647.429	647.517
B	2005.750	13.625	648.029	648.197
C	2015.750	13.625	648.629	648.861
D	2025.750	13.625	649.229	649.502
E	2035.750	13.625	649.823	650.113
F	2045.750	13.625	650.388	650.668
G	2055.750	13.625	650.918	651.167
H	2065.750	13.625	651.416	651.615
I	2075.750	13.625	651.880	652.018
J	2085.750	13.625	652.311	652.386
K	2095.750	13.625	652.708	652.733
CL Pier 1	2105.750	13.625	653.073	653.073
L	2115.750	13.625	653.403	653.392
M	2125.750	13.625	653.701	653.707
N	2135.750	13.625	653.965	654.003
O	2145.750	13.625	654.196	654.270
P	2155.750	13.625	654.393	654.499
Q	2165.750	13.625	654.558	654.684
R	2175.750	13.625	654.688	654.823
S	2185.750	13.625	654.786	654.913
T	2195.750	13.625	654.850	654.955
U	2205.750	13.625	654.881	654.955
V	2215.750	13.625	654.878	654.916
W	2225.750	13.625	654.843	654.849
X	2235.750	13.625	654.773	654.762
CL Pier 2	2245.750	13.625	654.671	654.671
Y	2255.750	13.625	654.535	654.559
Z	2265.750	13.625	654.366	654.441
AA	2275.750	13.625	654.163	654.301
AB	2285.750	13.625	653.928	654.126
AC	2295.750	13.625	653.658	653.907
AD	2305.750	13.625	653.356	653.637
AE	2315.750	13.625	653.020	653.310
AF	2325.750	13.625	652.651	652.924
AG	2335.750	13.625	652.248	652.480
AH	2345.750	13.625	651.813	651.981
AI	2355.750	13.625	651.343	651.432
CL BRG E ABUT	2365.750	13.625	650.841	650.841
BK E ABUT	2368.870	13.625	650.677	650.677

BEAM #6

Location	Station	Offset	Theoretical Grade Elevations	Theoretical Grade Elevations Adjusted For Dead Load Deflection
BK W ABUT	1982.620	20.375	646.659	646.659
CL BRG W ABUT	1985.750	20.375	646.846	646.846
A	1995.750	20.375	647.446	647.535
B	2005.750	20.375	648.046	648.215
C	2015.750	20.375	648.646	648.878
D	2025.750	20.375	649.246	649.519
E	2035.750	20.375	649.841	650.130
F	2045.750	20.375	650.405	650.686
G	2055.750	20.375	650.936	651.185
H	2065.750	20.375	651.433	651.632
I	2075.750	20.375	651.897	652.035
J	2085.750	20.375	652.328	652.404
K	2095.750	20.375	652.726	652.750
CL Pier 1	2105.750	20.375	653.090	653.090
L	2115.750	20.375	653.421	653.410
M	2125.750	20.375	653.718	653.724
N	2135.750	20.375	653.982	654.020
O	2145.750	20.375	654.213	654.287
P	2155.750	20.375	654.411	654.516
Q	2165.750	20.375	654.575	654.702
R	2175.750	20.375	654.706	654.840
S	2185.750	20.375	654.803	654.930
T	2195.750	20.375	654.867	654.973
U	2205.750	20.375	654.898	654.972
V	2215.750	20.375	654.896	654.934
W	2225.750	20.375	654.860	654.866
X	2235.750	20.375	654.791	654.780
CL Pier 2	2245.750	20.375	654.688	654.688
Y	2255.750	20.375	654.552	654.577
Z	2265.750	20.375	654.383	654.459
AA	2275.750	20.375	654.181	654.318
AB	2285.750	20.375	653.945	654.144
AC	2295.750	20.375	653.676	653.925
AD	2305.750	20.375	653.373	653.654
AE	2315.750	20.375	653.037	653.327
AF	2325.750	20.375	652.668	652.941
AG	2335.750	20.375	652.266	652.497
AH	2345.750	20.375	651.830	651.998
AI	2355.750	20.375	651.361	651.449
CL BRG E ABUT	2365.750	20.375	650.858	650.858
BK E ABUT	2368.870	20.375	650.695	650.695

DESIGNED	JOH
CHECKED	BRT
DRAWN	TC
CHECKED	JOH

2190b004

TOP OF SLAB ELEVATIONS
FAU ROUTE 6145 OVER
BNSF RAILROAD
SECTION 01-00590-00-BR (COUNTY)
LASALLE COUNTY
STATION 21+75.75
STR. NO. 050-8023

HUTCHISON ENGINEERING, INC.
JACKSONVILLE & JOLIET, ILLINOIS
Date: 3 /10 /2006

ROUTE	SEC	COUNTY	TOTAL SHEETS	SHEET NO.
FAU 6145	*	LASALLE	168	86
FED. ROAD DIST. NO. 3	ILLINOIS	PROJECT		

SHEET NO. 6
41 SHEETS

* 01-00590-00-BR (County)

CONTRACT NO. 87293

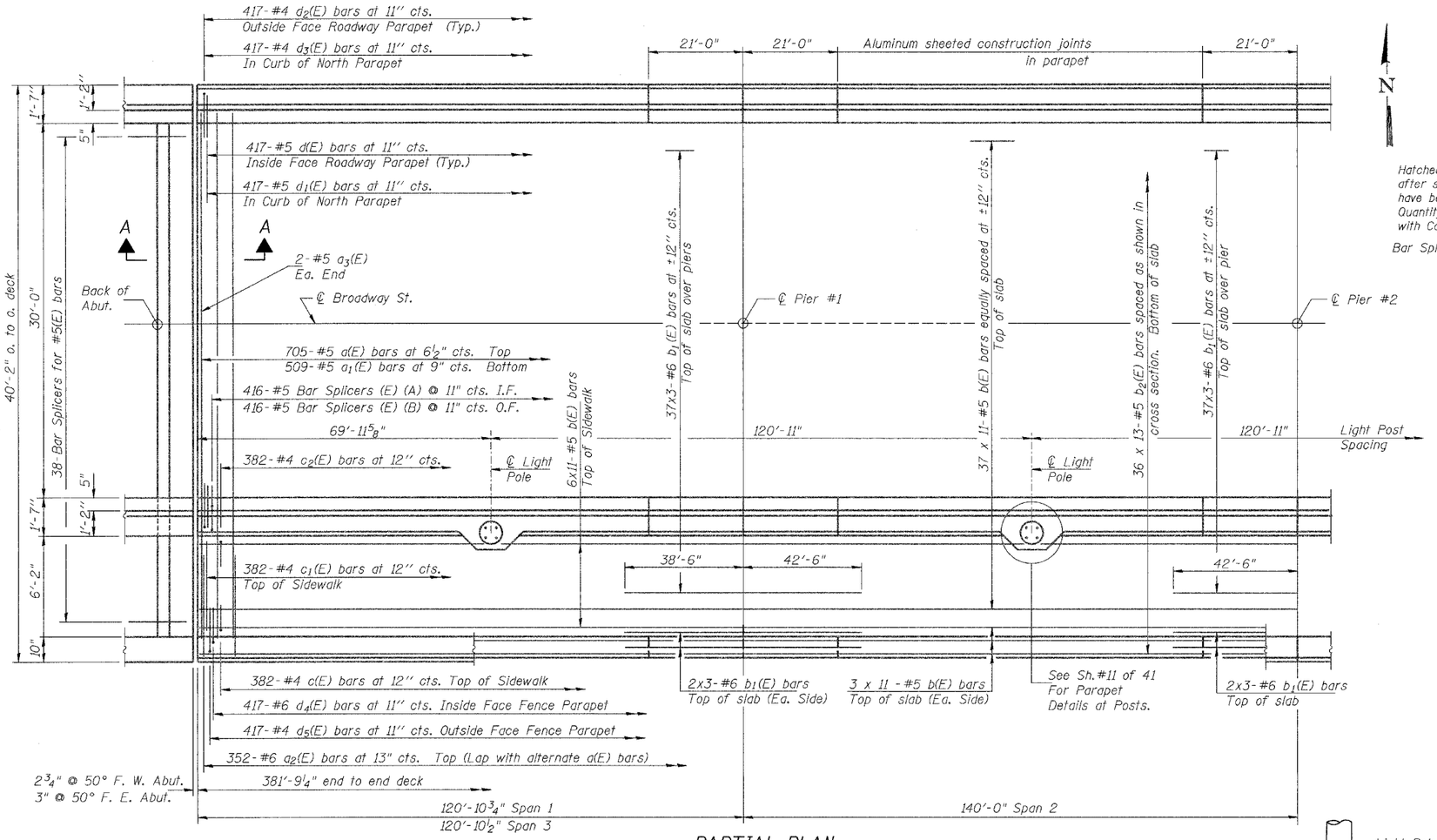

PARTIAL PLAN

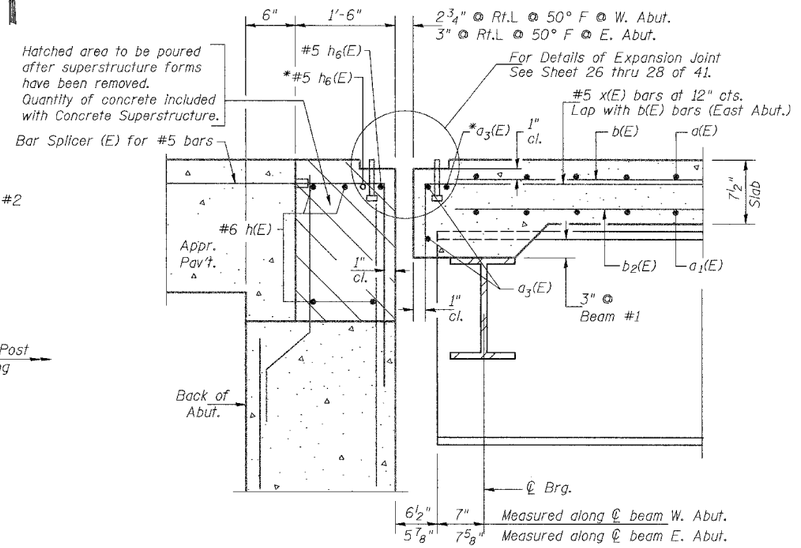

SECTION A-A

* Place a_3(E) and h_6(E) bars in back of anchor bolt as shown if required to maintain 1" cl. (+0-⅛"). Anchor Bolts should be tied to a_3(E) and h_6(E) bars.

Notes:
See Sheets 7 thru 11 of 41 for superstructure details and Bill of Material.
Reinforcement bars designated (E) shall be epoxy coated.
Bars indicated thus 20 x 3-#5 etc. indicates 20 lines of bars with 3 lengths per line.
See Sheets 7, 8, & 9 of 41 for parapet reinforcement.

MIN. BAR LAP (DECK)

#5 = 2'-2"
#6 = 2'-7"

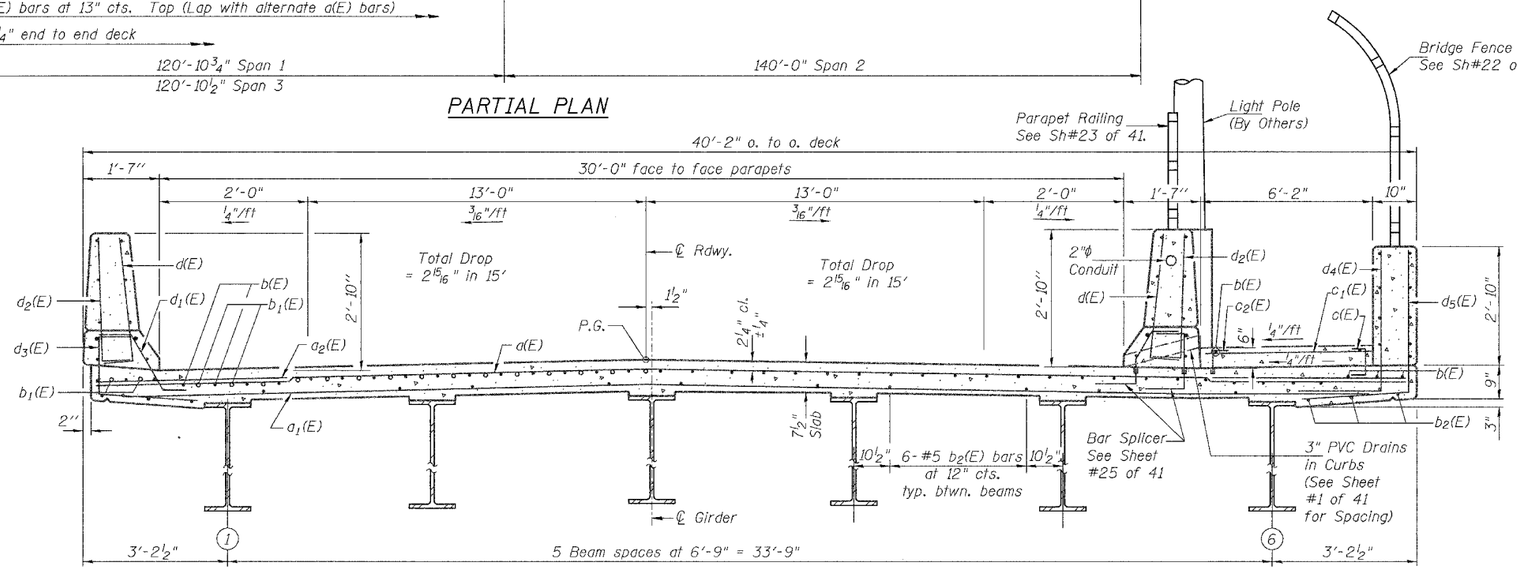

NEAR PIER

CROSS SECTION

(Looking East)

NEAR MIDSPAN

DESIGNED	JOH
CHECKED	BRT
DRAWN	TC
CHECKED	JOH

SUPERSTRUCTURE
FAU ROUTE 6145 OVER
BNSF RAILROAD
SECTION 01-00590-00-BR (COUNTY)
LASALLE COUNTY
STATION 21+75.75
STR. NO. 050-8023

HUTCHISON ENGINEERING, INC.
JACKSONVILLE & JOLIET, ILLINOIS

Date: 3 /10 /2006

2190b006

ROUTE NO.	SEC	COUNTY	TOTAL SHEETS	SHEET NO.
FAU 6145	*	LASALLE	168	87
FED. ROAD DIST. NO. 3	ILLINOIS	PROJECT		

SHEET NO. 7
41 SHEETS

* 01-00590-00-BR (County)

CONTRACT NO. 87293

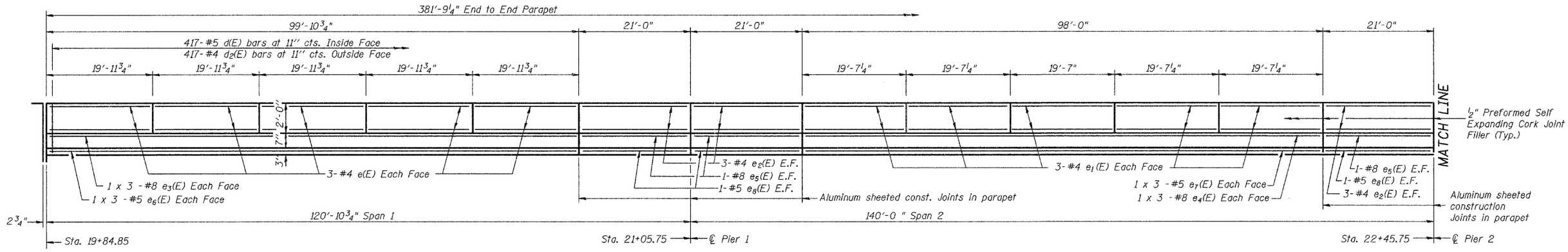

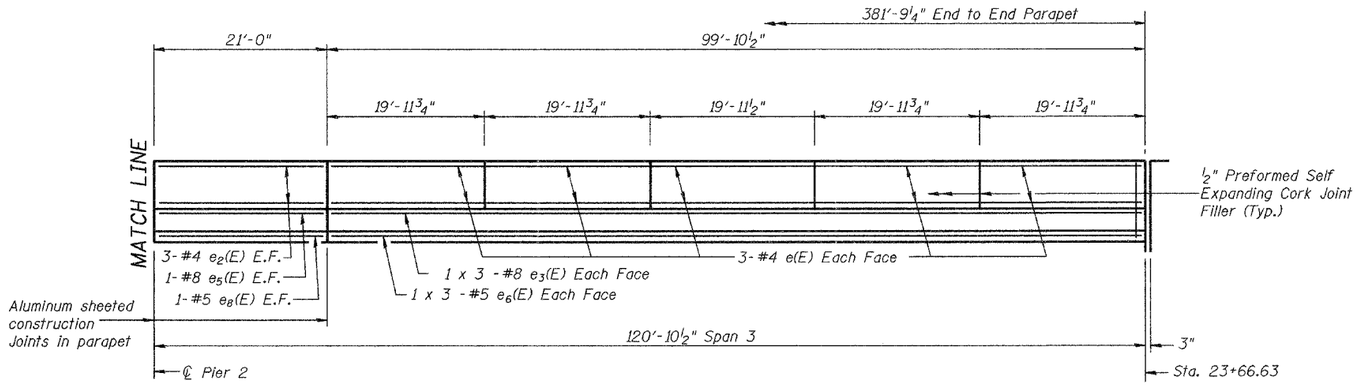

PARAPET ELEVATION (NORTH TRAFFIC BARRIER)

(Looking North at North Roadway Parapet)

MIN. BAR LAP (PARAPET)

#4 = 1'-4"
#5 = 1'-8"
#8 = 3'-5"

DESIGNED	JOH
CHECKED	BRT
DRAWN	TRD
CHECKED	JOH

2190b007

SUPERSTRUCTURE DETAILS
FAU ROUTE 6145 OVER
BNSF RAILROAD
SECTION 01-00590-00-BR (COUNTY)
LASALLE COUNTY
STATION 21+75.75
STR. NO. 050-8023

HUTCHISON ENGINEERING, INC.
JACKSONVILLE & JOLIET, ILLINOIS
Date: 3 /10 /2006

ROUTE NO.	SEC	COUNTY	TOTAL SHEETS	SHEET NO.
FAU 6145	*	LASALLE	168	88
FED. ROAD DIST. NO. 3	ILLINOIS	PROJECT		

SHEET NO. 8
41 SHEETS

* 01-00590-00-BR (County)

CONTRACT NO. 87293

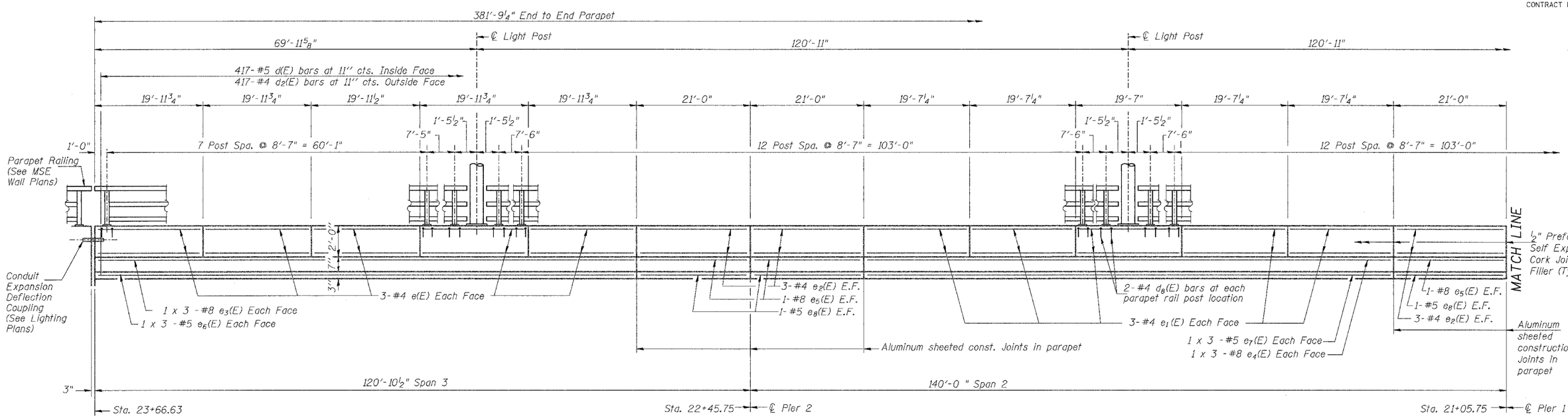

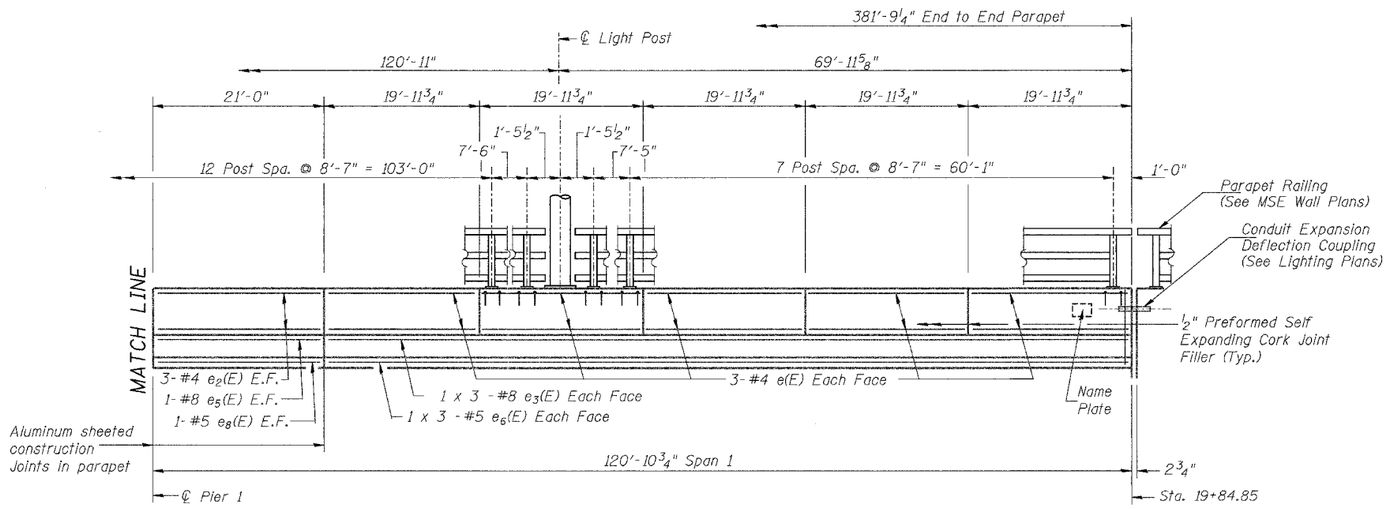

PARAPET ELEVATION (SOUTH TRAFFIC BARRIER)

(Looking South at South Roadway Parapet)

MIN. BAR LAP (PARAPET)

#4 = 1'-4"
#5 = 1'-8"
#8 = 3'-5"

DESIGNED	JOH
CHECKED	BRT
DRAWN	TRD
CHECKED	JOH

2190b008

SUPERSTRUCTURE DETAILS
FAU ROUTE 6145 OVER
BNSF RAILROAD
SECTION 01-00590-00-BR (COUNTY)
LASALLE COUNTY
STATION 21+75.75
STR. NO. 050-8023

HUTCHISON ENGINEERING, INC.
JACKSONVILLE & JOLIET, ILLINOIS

Date: 3 /10 /2006

ROUTE NO.	SEC	COUNTY	TOTAL SHEETS	SHEET NO.
FAU 6145	*	LASALLE	168	89
FED. ROAD DIST. NO. 3	ILLINOIS	PROJECT		

SHEET NO. 9
41 SHEETS

* 01-00590-00-BR (County)

CONTRACT NO. 87293

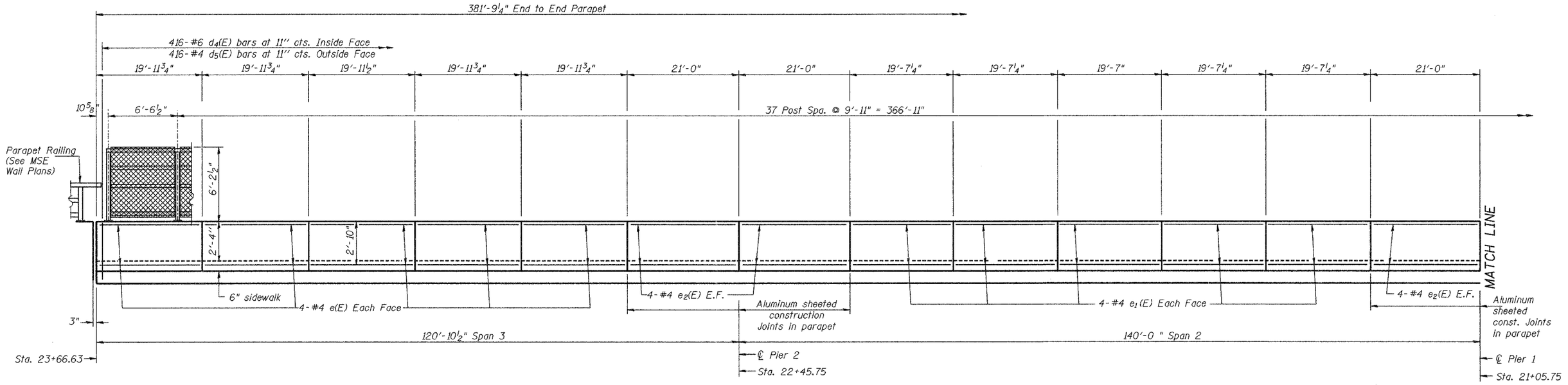

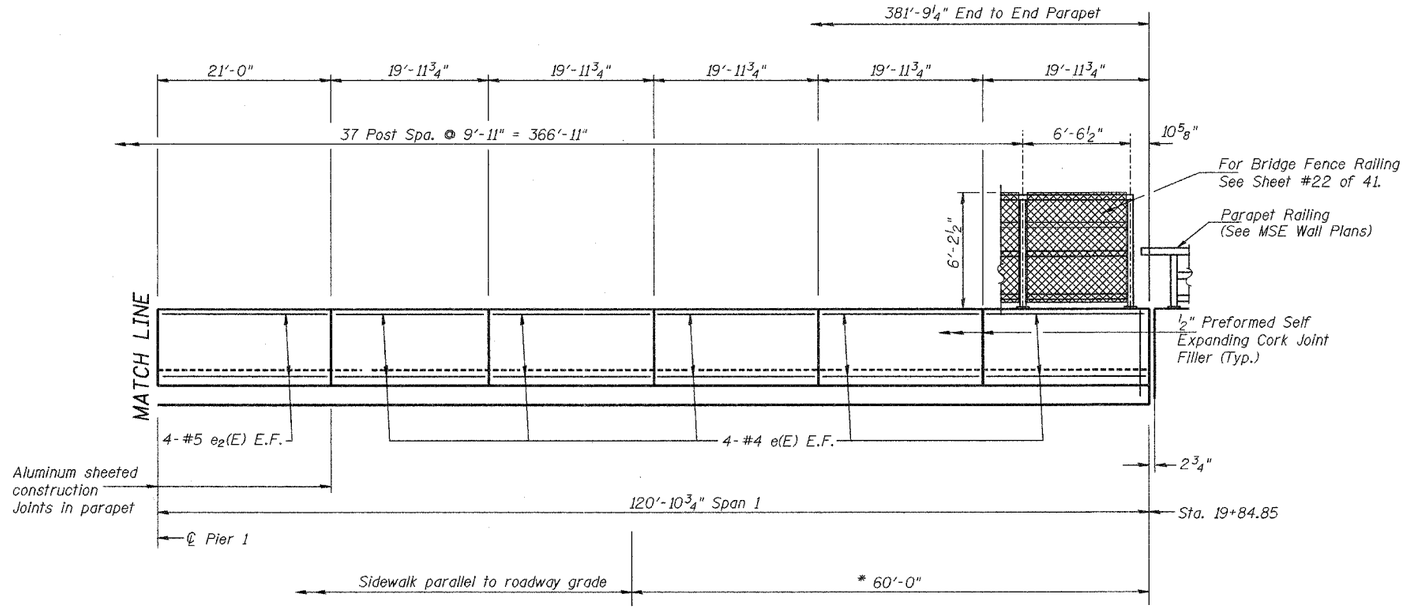

* Adjust sidewalk grade to meet ADA requirements
Cost included with Concrete Superstructure

PARAPET ELEVATION (SOUTH SIDEWALK BARRIER)

(Looking South at Sidewalk Parapet)

MIN. BAR LAP (PARAPET)

#4 = 1'-4"
#5 = 1'-8"
#8 = 3'-5"

DESIGNED	JOH
CHECKED	BRT
DRAWN	TRD
CHECKED	JOH

2190b009

SUPERSTRUCTURE DETAILS
FAU ROUTE 6145 OVER
BNSF RAILROAD
SECTION 01-00590-00-BR (COUNTY)
LASALLE COUNTY
STATION 21+75.75
STR. NO. 050-8023

HUTCHISON ENGINEERING, INC.
JACKSONVILLE & JOLIET, ILLINOIS

Date: 3 /10 /2006

ROUTE NO.	SEC	COUNTY	TOTAL SHEETS	SHEET NO.
FAU 6145	*	LASALLE	168	90
FED. ROAD DIST. NO. 3	ILLINOIS	PROJECT		

SHEET NO. 10
41 SHEETS

* 01-00590-00-BR (County)

CONTRACT NO. 87293

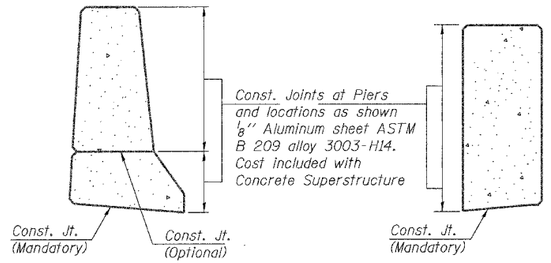

ROADWAY PARAPET JOINT DETAILS
(© Piers)

WALKWAY PARAPET JOINT DETAILS
(© Piers)

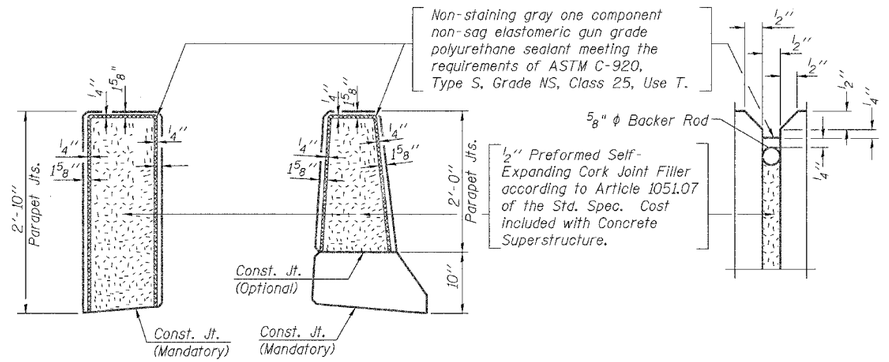

SEC THRU WALKWAY PARAPET

SEC THRU ROADWAY PARAPET

ROADWAY & WALKWAY PARAPET JOINT DETAILS

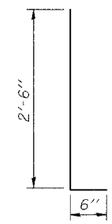

BARS d(E) & d_2(E)

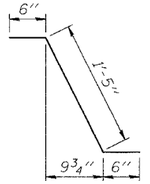

BAR d_1(E)

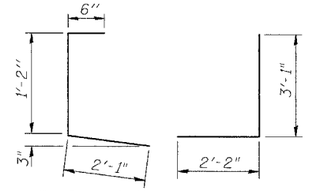

BAR d_3(E) BAR d_4(E)

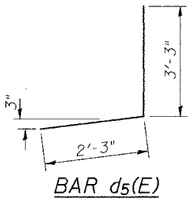

BAR d_5(E)

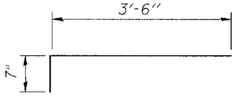

BAR x(E)

SUPERSTRUCTURE BILL OF MATERIAL

Bar	No.	Size	Length	Shape
d(E)	705	#5	38'-9"	——
d_1(E)	509	#5	38'-4"	——
d_2(E)	704	#6	4'-6"	——
d_3(E)	4	#5	39'-0"	——
b(E)	539	#5	36'-8"	——
b_1(E)	246	#6	28'-9"	——
b_2(E)	468	#5	31'-4"	——
c(E)	382	#4	2'-3"	⌐
c_1(E)	382	#4	5'-8"	——
c_2(E)	382	#4	1'-6"	⌐
d(E)	834	#5	3'-0"	⌐
d_1(E)	417	#5	2'-5"	⌐
d_2(E)	834	#4	3'-0"	⌐
d_3(E)	417	#4	3'-9"	⌐
d_4(E)	417	#6	5'-3"	⌐
d_5(E)	417	#4	5'-6"	⌐
d_6(E)	15	#6	9'-4"	⌐
d_7(E)	9	#6	4'-5"	⌐
d_8(E)	176	#4	2'-1"	⌐
e(E)	200	#4	19'-7"	——
e_1(E)	100	#4	19'-3"	——
e_2(E)	80	#4	20'-8"	——
e_3(E)	24	#8	35'-6"	——
e_4(E)	12	#8	34'-10"	——
e_5(E)	16	#8	20'-8"	——
e_6(E)	24	#5	34'-6"	——
e_7(E)	12	#5	34'-0"	——
e_8(E)	16	#5	20'-8"	——
x(E)	43	#5	4'-1"	⌐
Reinforcement Bars, Epoxy Coated		Pound	125,510	
Concrete Superstructure		Cu. Yds.	554.0	
Bar Splicers		Each	832	

Reinforcement bars designated (E) shall be epoxy coated.
Bars indicated thus 1 x 2 - #5 etc. indicates 1 line of bars with 2 lengths per line.

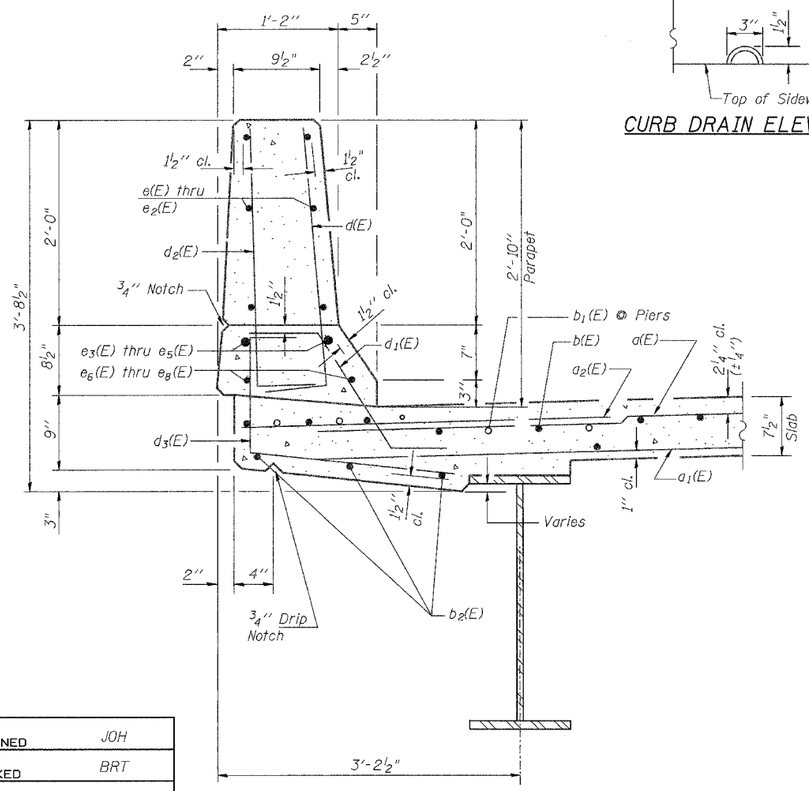

SECTION THRU NORTH PARAPET

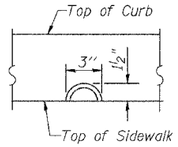

CURB DRAIN ELEVATION

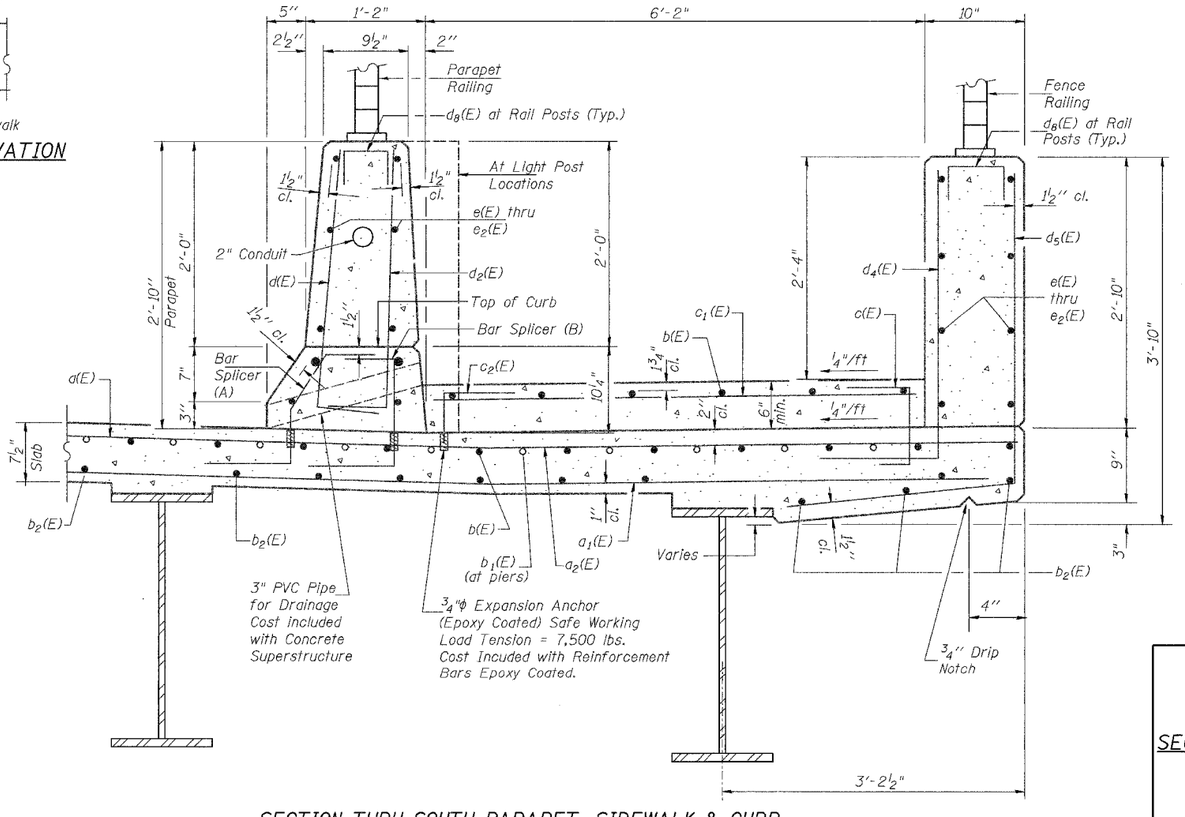

SECTION THRU SOUTH PARAPET, SIDEWALK & CURB

DESIGNED	JOH
CHECKED	BRT
DRAWN	TRD
CHECKED	JOH

SUPERSTRUCTURE DETAILS
FAU ROUTE 6145 OVER
BNSF RAILROAD
SECTION 01-00590-00-BR (COUNTY)
LASALLE COUNTY
STATION 21+75.75
STR. NO. 050-8023

HUTCHISON ENGINEERING, INC.
JACKSONVILLE & JOLIET, ILLINOIS
Date: 3 /10 /2006

2190b010

ROUTE NO.	SEC	COUNTY	TOTAL SHEETS	SHEET NO.
FAU 6145	*	LASALLE	168	91
FED. ROAD DIST. NO. 3	ILLINOIS	PROJECT		

SHEET NO. 11
41 SHEETS

* 01-00590-00-BR (County)

CONTRACT NO. 87293

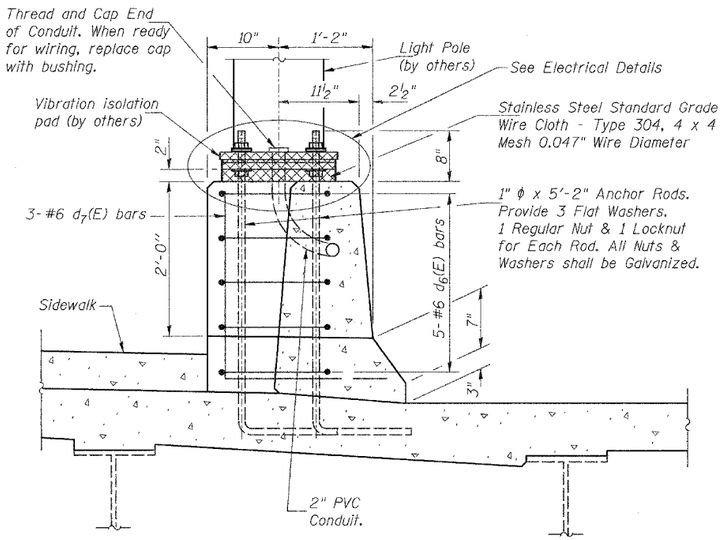

SECTION A-A

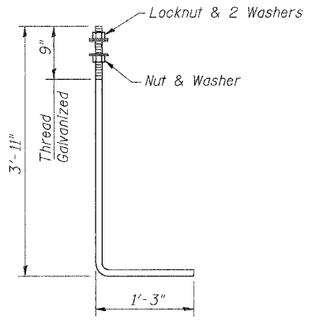

1" ϕ ANCHOR ROD
(ASTM F 1554 Grade 105)

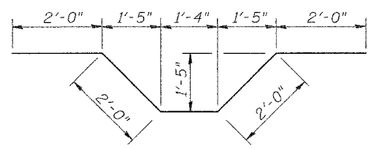

BAR d6(E)

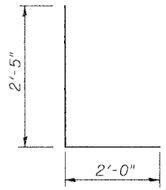

BAR d7(E)

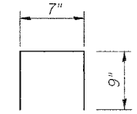

BAR d8(E)

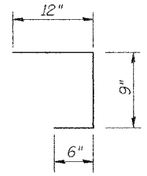

BAR c(E)

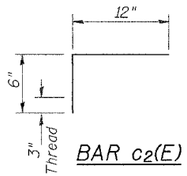

BAR c2(E)

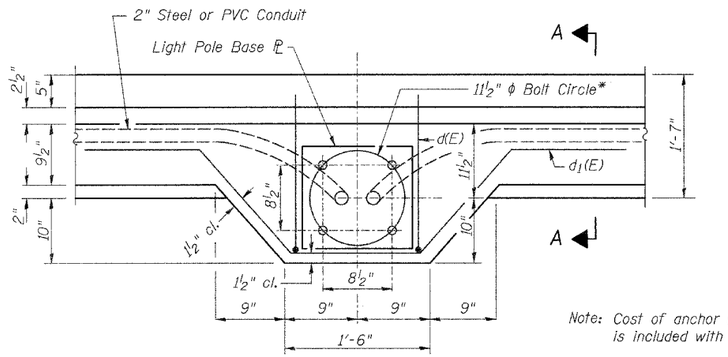

LIGHT POLE MOUNTING PLAN

* Match Light Pole Manufacturer Requirements.

LIGHT FIXTURE LOCATION

Location	Station	Offset
Structure	20+54.82	16.58' Rt.
Structure	21+75.74	16.58' Rt.
Structure	22+96.66	16.58' Rt.

DESIGNED	JOH
CHECKED	BRT
DRAWN	TRD
CHECKED	JOH

2190b0011

SUPERSTRUCTURE DETAILS
FAU ROUTE 6145 OVER
BNSF RAILROAD
SECTION 01-00590-00-BR (COUNTY)
LASALLE COUNTY
STATION 21+75.75
STR. NO. 050-8023

HUTCHISON ENGINEERING, INC.
JACKSONVILLE & JOLIET, ILLINOIS

Date: 3 /10 /2006

ROUTE NO.	SEC	COUNTY	TOTAL SHEETS	SHEET NO.
FAU 6145	*	LASALLE	168	92
FED. ROAD DIST. NO. 3	ILLINOIS	PROJECT		

SHEET NO. 12
41 SHEETS

* 01-00590-00-BR (County)

CONTRACT NO. 87293

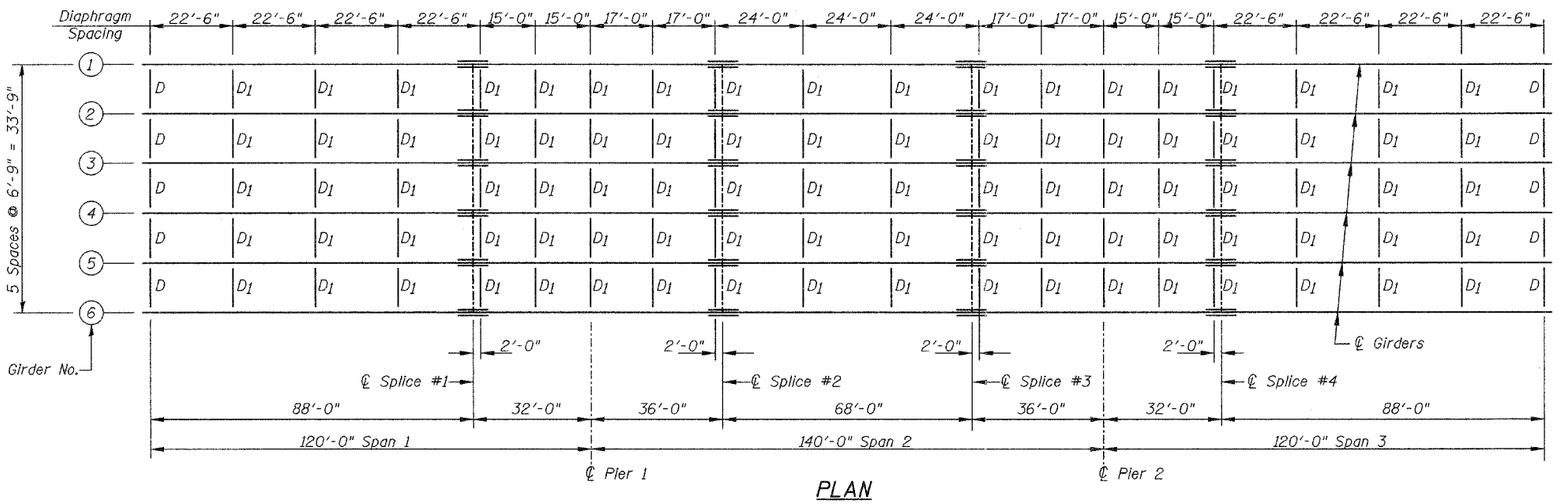

PLAN

End Diaphragm - D (10 Req'd)
Interior Diaphragm - D_1 (90 Req'd)

N

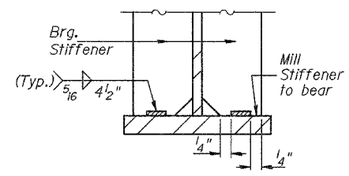

DETAIL "A"

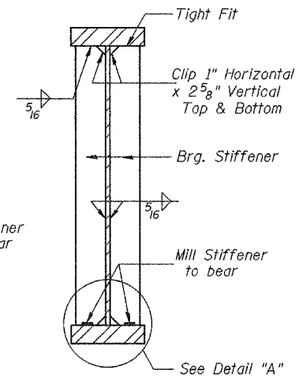

SECTION AT PIER

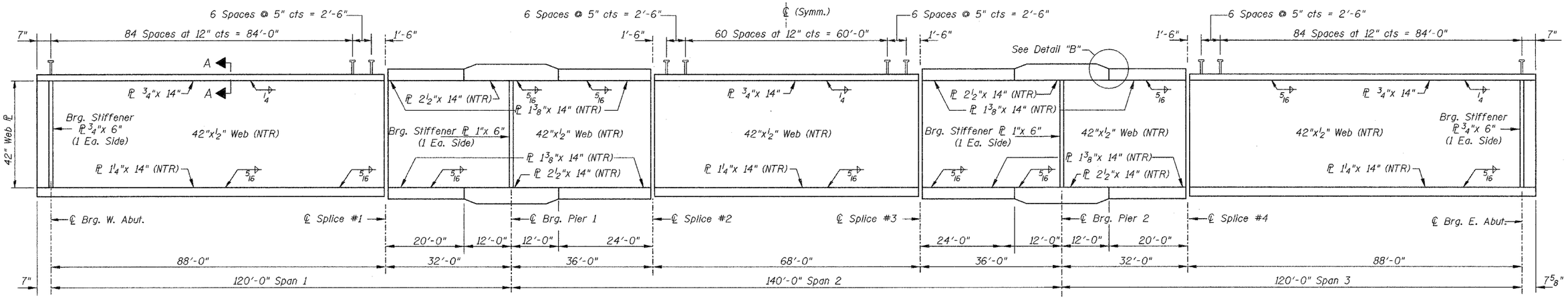

GIRDER ELEVATION

"NTR" denotes plates for which Notch Toughness Requirements are applicable.

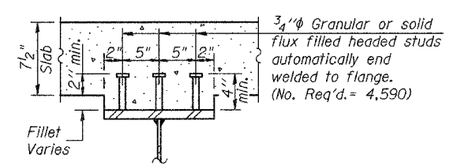

SECTION A-A

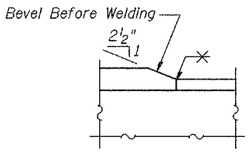

DETAIL "B"

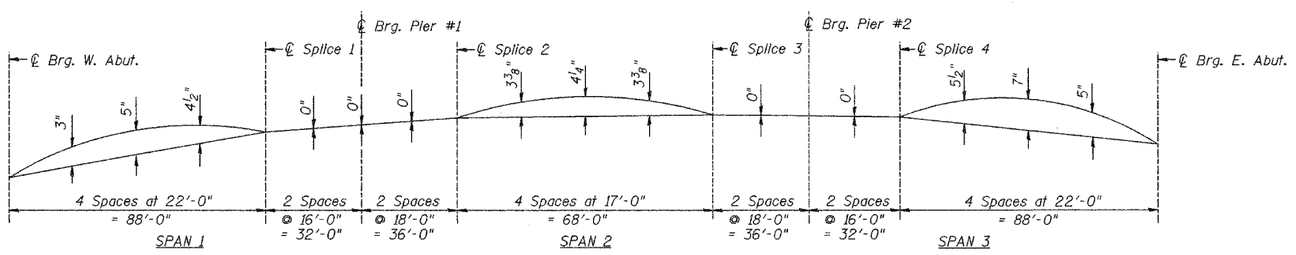

CAMBER DIAGRAM

DESIGNED	JOH
CHECKED	BRT
DRAWN	TRD
CHECKED	JOH

STRUCTURAL STEEL FRAMING PLAN
FAU ROUTE 6145 OVER
BNSF RAILROAD
SECTION 01-00590-00-BR (COUNTY)
LASALLE COUNTY
STATION 21+75.75
STR. NO. 050-8023

HUTCHISON ENGINEERING, INC.
JACKSONVILLE & JOLIET, ILLINOIS

Date: 8 /26 /2005

ROUTE NO.	SEC	COUNTY	TOTAL SHEETS	SHEET NO.
FAU 6145	*	LASALLE	168	93
FED. ROAD DIST. NO. 3	ILLINOIS	PROJECT		

SHEET NO. 13
41 SHEETS

* 01-00590-00-BR (County)

CONTRACT NO. 87293

TOP OF WEB ELEVATIONS

Beam No.	℄ Brg. West Abut.	℄ Splice #1	℄ Brg. Pier #1	℄ Splice #2	℄ Splice #3	℄ Brg. Pier 2	℄ Splice #4	℄ Brg. East Abut.
1	646.084	651.105	652.143	653.312	654.089	653.742	653.434	650.096
2	646.192	651.213	652.251	653.420	654.196	653.849	653.542	650.204
3	646.293	651.314	652.352	653.521	654.298	653.951	653.643	650.305
4	646.188	651.209	652.247	653.416	654.192	653.845	653.538	650.200
5	646.079	651.100	652.138	653.307	654.084	653.737	653.429	650.091
6	646.096	651.118	652.156	653.325	654.101	653.755	653.447	650.108

For Fabrication Only

INTERIOR BEAM MOMENT TABLE

	Units		0.4 Span 1 & 0.6 Span 3	Piers 1 & 2	0.5 Span 2
	Is	(in4)	15587	37778	15587
	Ic (n)	(in4)	40431	—	40431
	Ic (3n)	(in4)	29014	—	29014
	Ss	(in3)	816	1608	816
	Sc (n)	(in3)	1118	—	1118
	Sc (3n)	(in3)	1023	—	1023
	℄D	(K/ft.)	0.90	1.65	0.90
	M ℄	('K)	868	2881	487
	S ℄	(K/ft.)	0.69	—	0.69
	Ms ℄	('K)	723	—	522
	M ℄	('K)	1060	1040	1021
	M (Imp)	('K)	216	204	192.3
	$\frac{5}{3}$(M ℄+I)	('K)	2126	2073	2023
	Ma	('K)	4833	6441	3942
*	Mu	('K)	5000	—	5397
	fs ℄ non-comp	(k.s.i.)	12.8	21.5	7.2
	fs ℄ comp	(k.s.i.)	8.5	—	6.1
	fs $\frac{5}{3}$(℄+I)	(k.s.i.)	22.8	15.5	21.7
	fs (Overload)	(k.s.i.)	44.1	37.0	35.0
**	fs (Total)	(k.s.i.)	—	48.1	—
	VR	(K)	54.0	—	46.4

* Compact Braced Section
** Non-Compact Braced Section

INTERIOR BEAM REACTION TABLE

Units		E. & W. Abuts.	Piers 1 & 2
R ℄	(K)	71.3	230.4
R ℄	(K)	48.1	84.9
Imp.	(K)	9.8	16.6
R (Total)	(K)	129.2	331.9

Is and Ss are the moment of inertia and section modulus of the steel section used in computing fs (Total & Overload).

Ic and Sc are the moment of inertia and section modulus of the composite section used in computing fs (Total & Overload).

M ℄ = Moment due to dead loads on non-composite section.
Ms ℄ = Moment due to dead loads on composite section.
M ℄ = Moment due to live loads on non-composite or composite section.
I = Live load impact

Ma (Applied Moment)=1.3[M ℄+ Ms ℄+ $\frac{5}{3}$(M ℄+ I)].
Mu=Full plastic moment capacity for compact, braced section.
fs (Overload) is the sum of the stresses due to M ℄+ Ms ℄+ $\frac{5}{3}$(M ℄+ I).
fs (Total) is the sum of the stresses due to 1.3[M ℄+ Ms ℄+ $\frac{5}{3}$(M ℄+ I)].
VR is the maximum Live Load + Impact shear range in span.

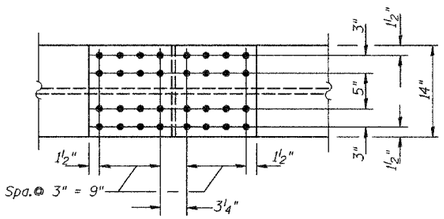

TOP FLANGE

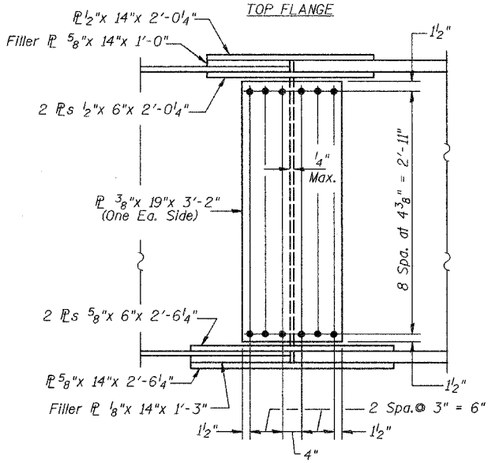

WEB

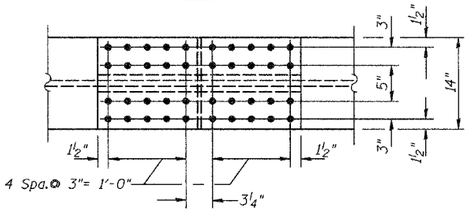

BOTTOM FLANGE

FIELD SPLICE DETAIL

NTR Except Filler Plates

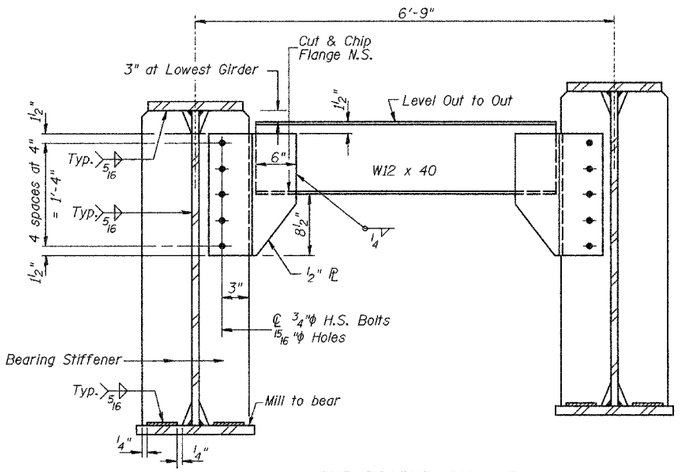

END DIAPHRAGM - D

(10 Req'd.)

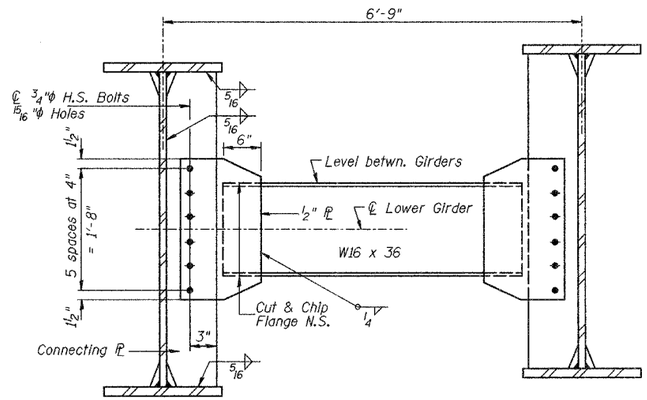

INTERIOR DIAPHRAGM - D_1

(90 Req'd.)

NOTES: Use ⅞" ϕ H.S. Bolts in all splices.
All splice plate material except filler plates, shall conform to the Supplemental Requirements for Notch Toughness Zone 2.
All structural steel shall be AASHTO M270 Grade 50W.
Use ¾" H.S. Bolts with 15/16" ϕ holes in all cross Frames. Two hardened washers shall be required over holes in cross frames.

DESIGNED	JOH
CHECKED	BRT
DRAWN	TRD
CHECKED	JOH

STRUCTURAL STEEL DETAILS
FAU ROUTE 6145 OVER
BNSF RAILROAD
SECTION 01-00590-00-BR (COUNTY)
LASALLE COUNTY
STATION 21+75.75
STR. NO. 050-8023

HUTCHISON ENGINEERING, INC.
JACKSONVILLE & JOLIET, ILLINOIS
Date: 3 /10 /2006

2190b013

ROUTE NO.	SEC	COUNTY	TOTAL SHEETS	SHEET NO.
FAU 6145	*	LASALLE	168	94
FED. ROAD DIST. NO. 3	ILLINOIS	PROJECT		

* 01-00590-00-BR (County)

SHEET NO. 14
41 SHEETS

CONTRACT NO. 87293

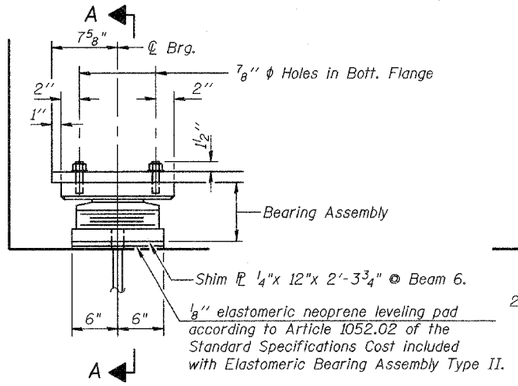

ELEVATION AT EAST ABUT.

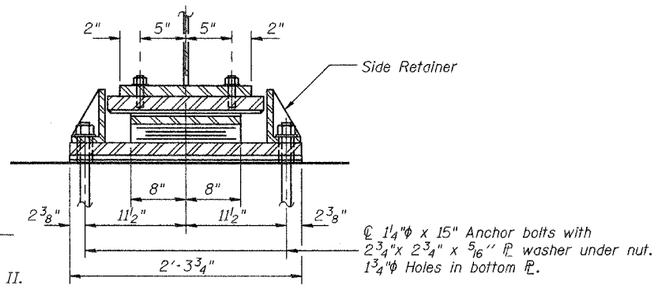

SECTION A-A

TYPE II ELASTOMERIC EXP. BRG.
EAST ABUT.

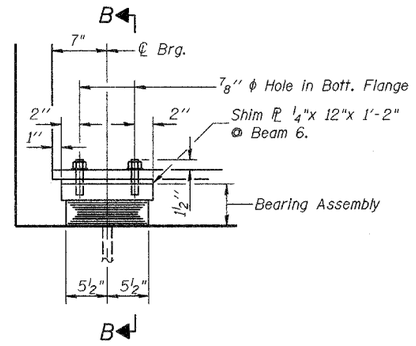

ELEVATION AT WEST ABUT.

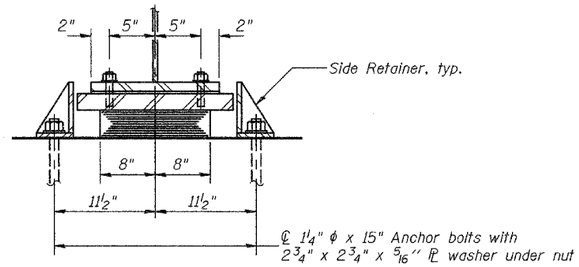

SECTION B-B

TYPE I ELASTOMERIC EXP. BRG.
WEST ABUT.

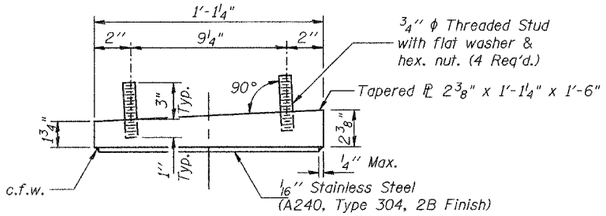

TOP BEARING ASSEMBLY EAST ABUT.

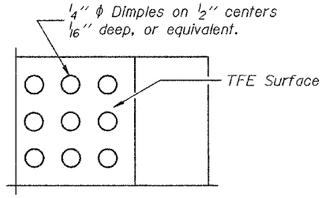

PLAN-TFE SURFACE EAST ABUT.

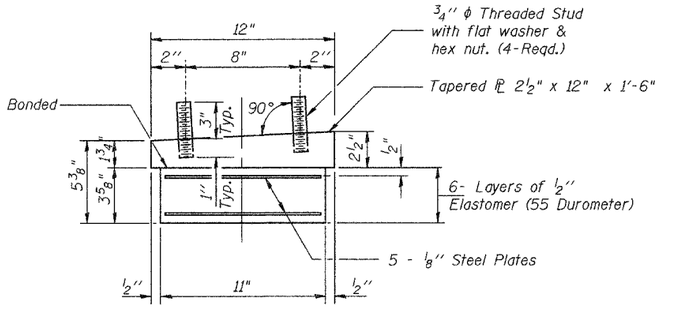

BEARING ASSEMBLY WEST ABUT.

Note: Shim plates shall not be placed under Bearing Assembly.

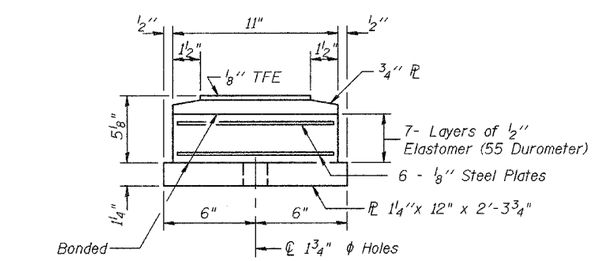

BOTTOM BEARING ASSEMBLY EAST ABUT.

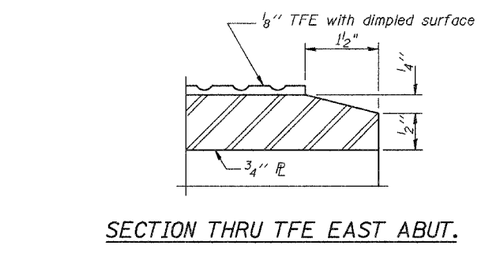

SECTION THRU TFE EAST ABUT.

Note: The 1/8" TFE sheet shall be bonded directly to the top steel plate with a two-component, medium viscosity epoxy resin, conforming to the requirements of the Federal Specification MMM-A-134, Type I. The bond agent shall be applied on the full area of the contact surfaces.

Bonding of 1/8" TFE sheet during vulcanizing process will be permitted provided the process and method of adjusting assembly height is approved by the Engineer.

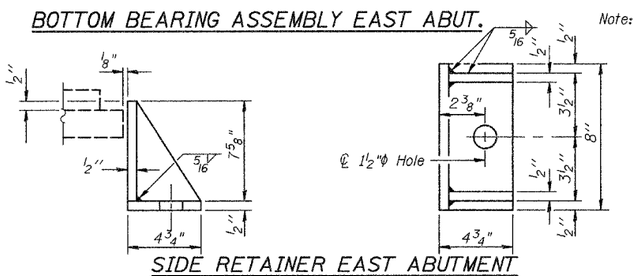

SIDE RETAINER EAST ABUTMENT

Equivalent rolled angle with stiffeners will be allowed in lieu of welded plates. Weight included with Structural Steel.

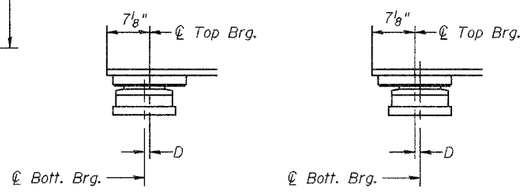

SETTING ANCHOR BOLTS AT EXP. BRG. EAST ABUT.

D=1/8" per each 100' of expansion for every 15° temp. change from the normal temp. of 50°F.

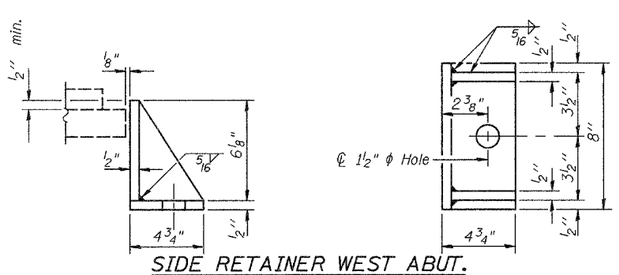

SIDE RETAINER WEST ABUT.

Equivalent rolled angle with stiffeners will be allowed in lieu of welded plates. Weight included with Structural Steel.

BILL OF MATERIAL

Item	Unit	Total
Elastomeric Bearing Assembly Type I (West Abut.)	Each	6
Elastomeric Bearing Assembly Type II (East Abut.)	Each	6

DESIGNED	JOH
CHECKED	BRT
DRAWN	TD
CHECKED	JOH

BEARING DETAILS
EAST & WEST ABUTMENTS
FAU ROUTE 6145 OVER
BNSF RAILROAD
SECTION 01-00590-00-BR (COUNTY)
LASALLE COUNTY
STATION 21+75.75
STR. NO. 050-8023

HUTCHISON ENGINEERING, INC.
JACKSONVILLE & JOLIET, ILLINOIS
Date: 3 /10 /2006

2190b014

ROUTE NO.	SEC	COUNTY	TOTAL SHEETS	SHEET NO.
FAU 6145	*	LASALLE	168	95
FED. ROAD DIST. NO. 3	ILLINOIS	PROJECT		

SHEET NO. 15
41 SHEETS

* 01-00590-00-BR (County)

CONTRACT NO. 87293

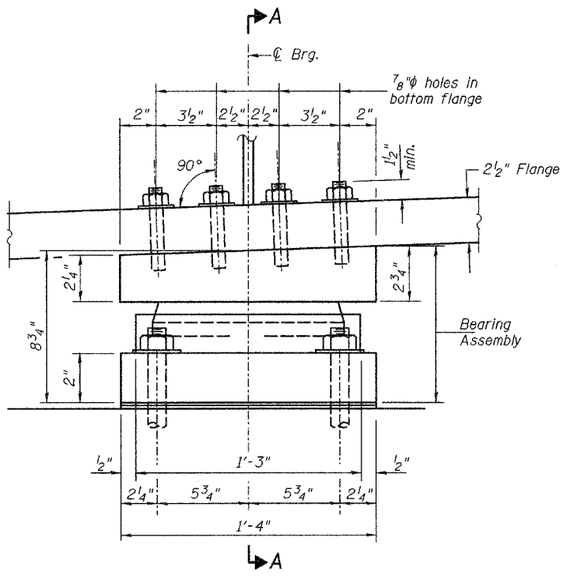

ELEVATION AT PIER 1

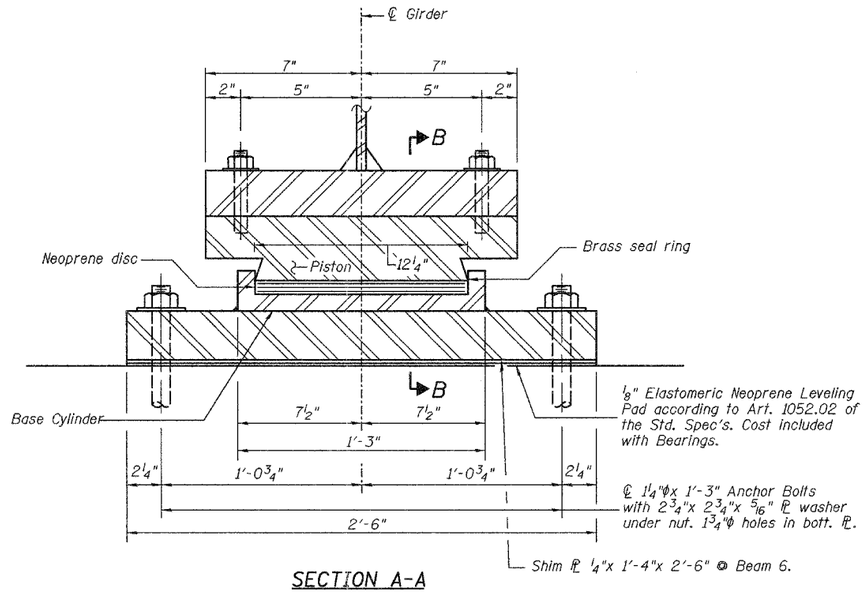

SECTION A-A

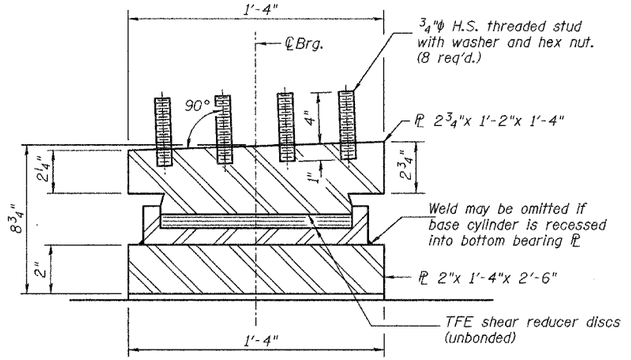

SECTION B-B

FIXED FLOATING BEARING

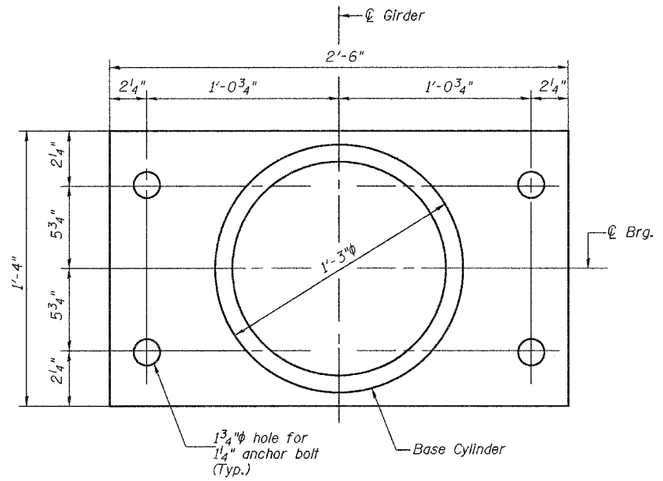

BOTTOM BEARING ℗ AND BASE CYLINDER PLAN

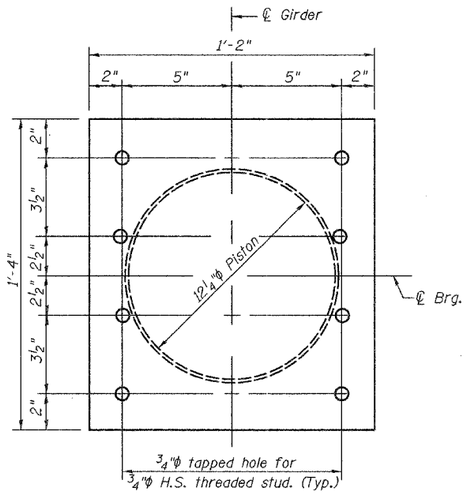

TOP BEARING ℗ AND PISTON PLAN

BEARING DATA	
	Pier 1
Vertical design load	315 k

Notes: The plates of the Bearing Assembly shall be AASHTO M270, Grade 50W.
For anchor bolt installation details, see sheet 24 of 41.

BILL OF MATERIAL

Item	Unit	Total
Floating Bearings, Fixed, 350 kip	Each	6

DESIGNED	JOH
CHECKED	BRT
DRAWN	TD
CHECKED	JOH

BEARING DETAILS PIER 1
FAU ROUTE 6145 OVER
BNSF RAILROAD
SECTION 01-00590-00-BR (COUNTY)
LASALLE COUNTY
STATION 21+75.75
STR. NO. 050-8023

HUTCHISON ENGINEERING, INC.
JACKSONVILLE & JOLIET, ILLINOIS
Date: 3 /10 /2006

2190b015

ROUTE NO.	SEC	COUNTY	TOTAL SHEETS	SHEET NO.
FAU 6145	*	LASALLE	168	96
FED. ROAD DIST. NO. 3	ILLINOIS	PROJECT		

SHEET NO. 16
41 SHEETS

* 01-00590-00-BR (County)

CONTRACT NO. 87293

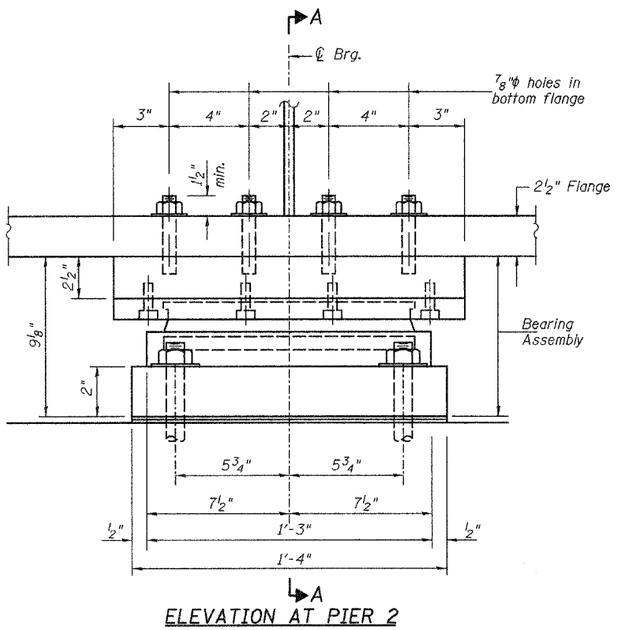

ELEVATION AT PIER 2

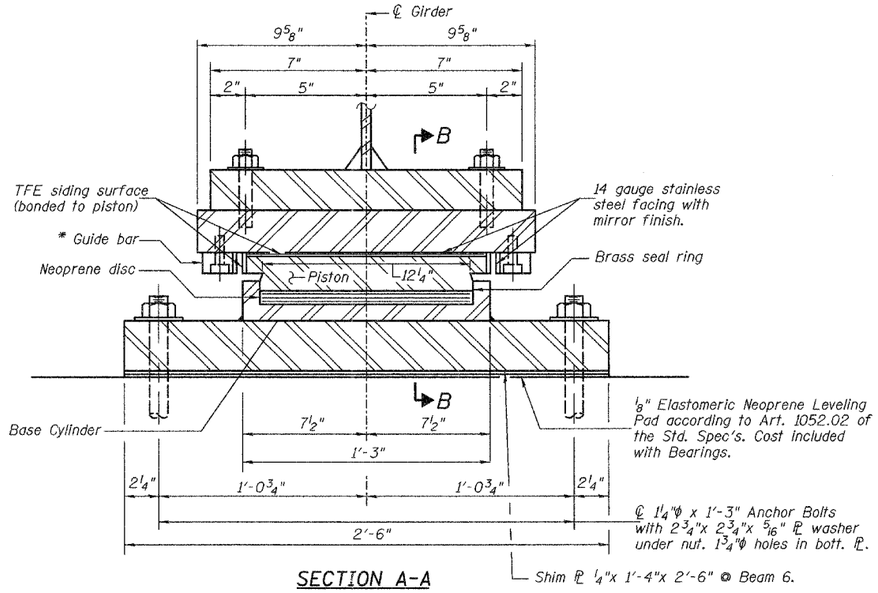

SECTION A-A

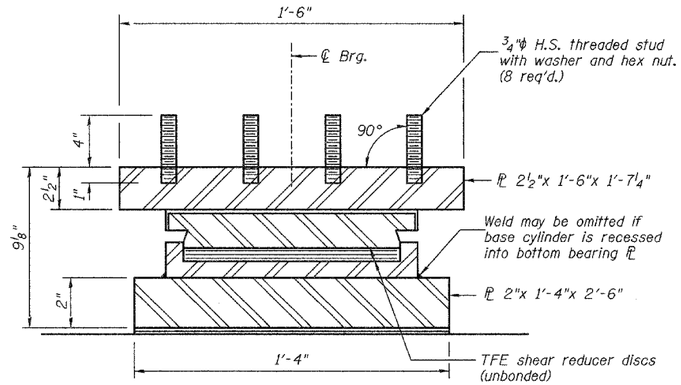

SECTION B-B

* As alternates to the bolted connection shown. The guide bars may be connected to the top bearing plate by groove welds or the guide bars and top bearing plate may be fabricated as a single piece.

GUIDED EXPANSION FLOATING BEARING

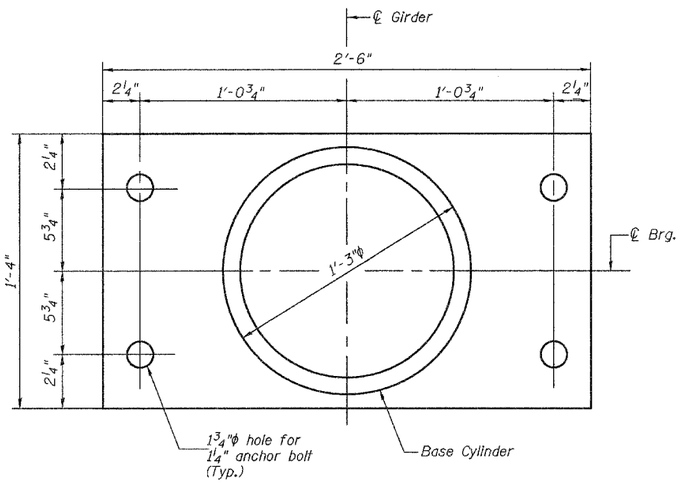

BOTTOM BEARING ℄ AND BASE CYLINDER PLAN

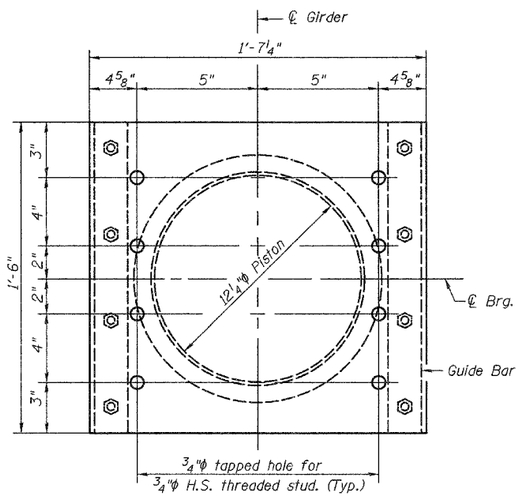

TOP BEARING ℄ AND PISTON PLAN

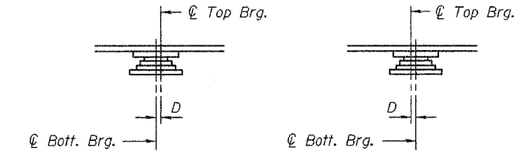

SETTING ANCHOR BOLTS AT EXP. BRG.

$d = \frac{1}{8}$" per each 100' of expansion for every 15° temp. change from the normal temp. of 50° F.

Notes: The plates of the Bearing Assembly shall be AASHTO M270, Grade 50W.
For anchor bolt installation details, see sheet 24 of 41.

BILL OF MATERIAL

Item	Unit	Total
Floating Bearings, Guided Expansion, 350 kip	Each	6

BEARING DATA	
	Pier 2
Vertical design load	315 k
Total required movement	2"

DESIGNED	JOH
CHECKED	BRT
DRAWN	TD
CHECKED	JOH

BEARING DETAILS PIER 2
FAU ROUTE 6145 OVER
BNSF RAILROAD
SECTION 01-00590-00-BR (COUNTY)
LASALLE COUNTY
STATION 21+75.75
STR. NO. 050-8023

HUTCHISON ENGINEERING, INC.
JACKSONVILLE & JOLIET, ILLINOIS
Date: 3 /10 /2006

2190b016

ROUTE NO.	SEC	COUNTY	TOTAL SHEETS	SHEET NO.
FAU 6145	*	LASALLE	168	97
FED. ROAD DIST. NO. 3	ILLINOIS	PROJECT		

SHEET NO. 17
41 SHEETS

* 01-00590-00-BR (County)

CONTRACT NO. 87293

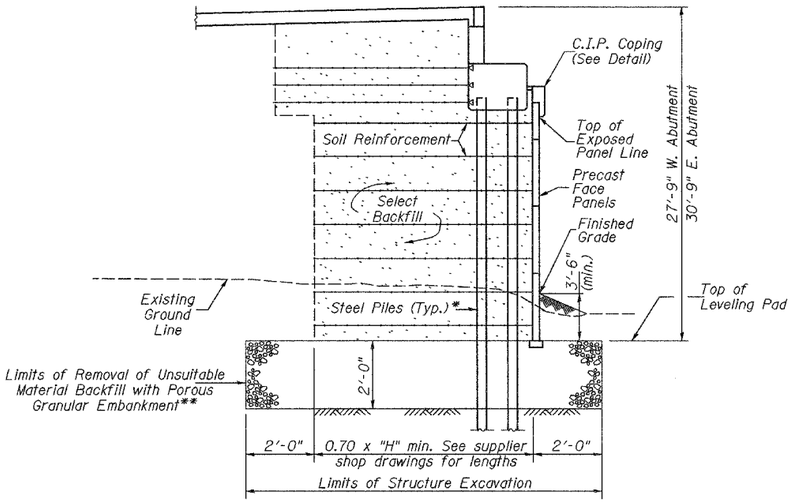

* Piles shall be driven prior to placement of the Reinforcement Select Fill and coated with Coal Tar Epoxy from the bottom of the select fill to 1" above the base of the abutment. The cost of the Coal Tar Epoxy Coating shall be included with the cost of the Mechanically Stabilized Earth Retaining Wall.

** The Porous Granular Embankment shall have a minimum Friction angle of 30 degrees. The contractor shall either drive the piles after excavation and prior to Porous Granular placement or limit the maximum aggregate size placed near the proposed piles to 0.5 inch to allow the pile penetration without damage.

SECTION AT ABUTMENT

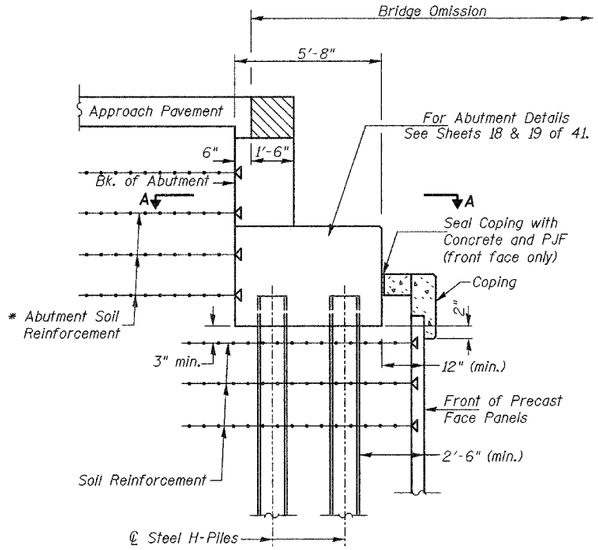

ABUTMENT CAP SECTION

* The MSE wall supplier shall design the abutment reinforcement to resist a horizontal force of 1.3 k/ft of abutment.

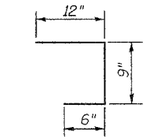

BAR c(E)

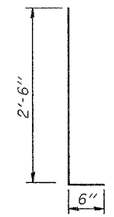

BARS d(E) & d2(E)

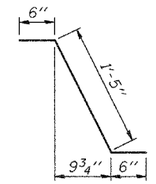

BAR d1(E)

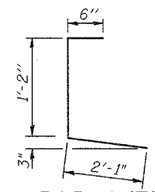

BAR d3(E)

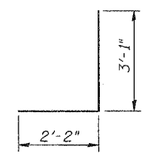

BAR d4(E)

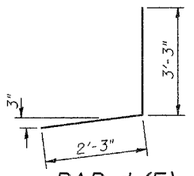

BAR d5(E)

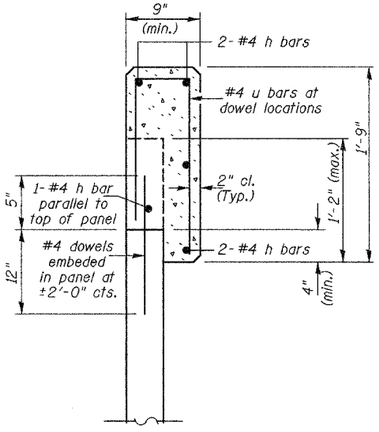

SECTION CAST-IN-PLACE COPING

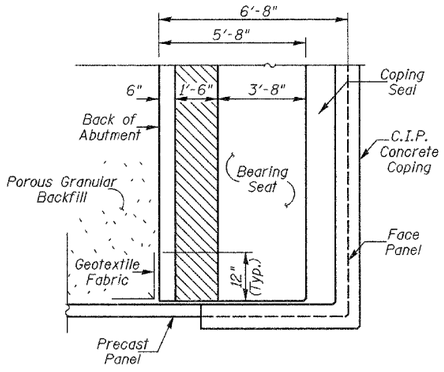

SECTION A-A

DESIGNED	JOH
CHECKED	BRT
DRAWN	TC & TD
CHECKED	JOH

2190b0017

ABUTMENT DETAILS
FAU ROUTE 6145 OVER
BNSF RAILROAD
SECTION 01-00590-00-BR (COUNTY)
LASALLE COUNTY
STATION 21+75.75
STR. NO. 050-8023

HUTCHISON ENGINEERING, INC.
JACKSONVILLE & JOLIET, ILLINOIS

Date: 3 /10 /2006

Notes: Hatched area to be poured after superstructure forms have been removed. Quantity of concrete included with Concrete Superstructure.
Space reinforcement in cap to miss anchor bolts.
Pour steps monolithically with cap.
Reinforcement bars designated (E) shall be epoxy coated.
Bars indicated thus 4x2 #5 etc. indicates 4 lines of bars with 2 lengths per line.

General Contractor shall coordinate with Electrical Contractor before embedding the conduits and Junction Boxes

ROUTE NO.	SEC	COUNTY	TOTAL SHEETS	SHEET NO.
FAU 6145	*	LASALLE	168	98
FED. ROAD DIST. NO. 3	ILLINOIS	PROJECT		

* 01-00590-00-BR (County)

SHEET NO. 18
41 SHEETS

CONTRACT NO. 87293

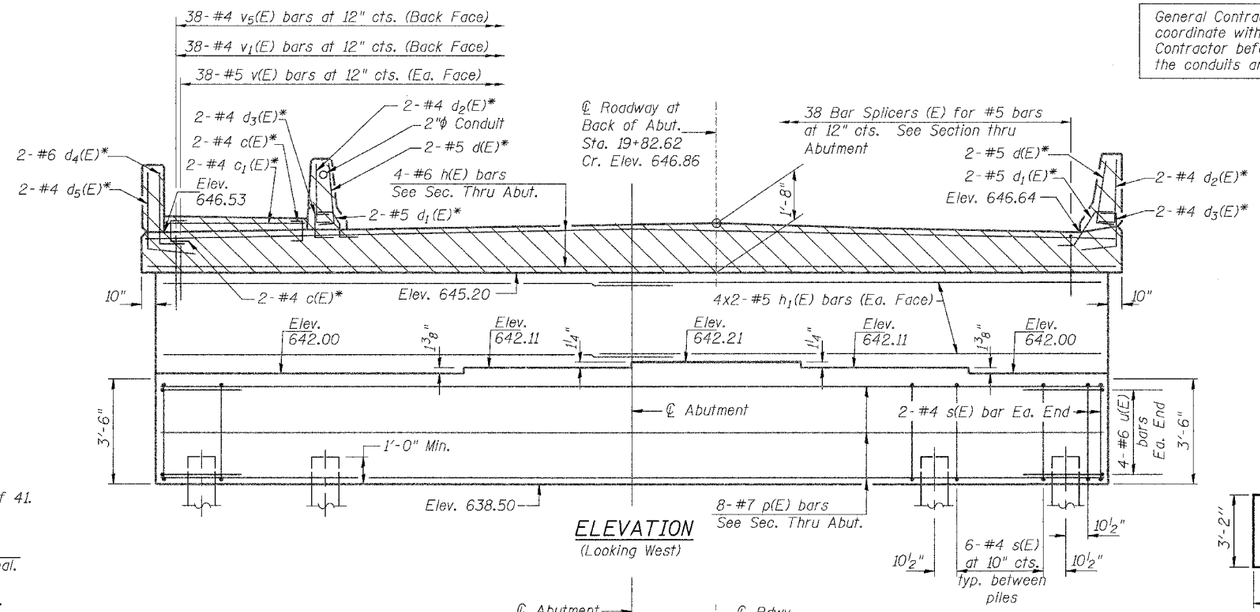

ELEVATION
(Looking West)

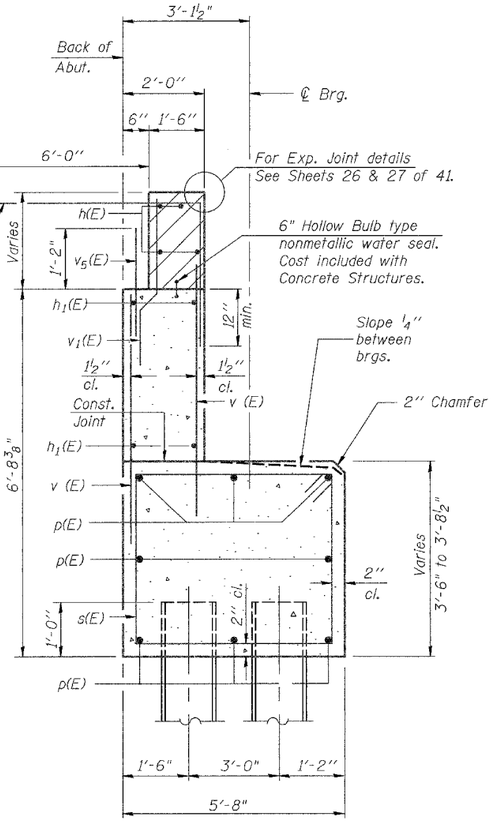

SEC. THRU ABUT.

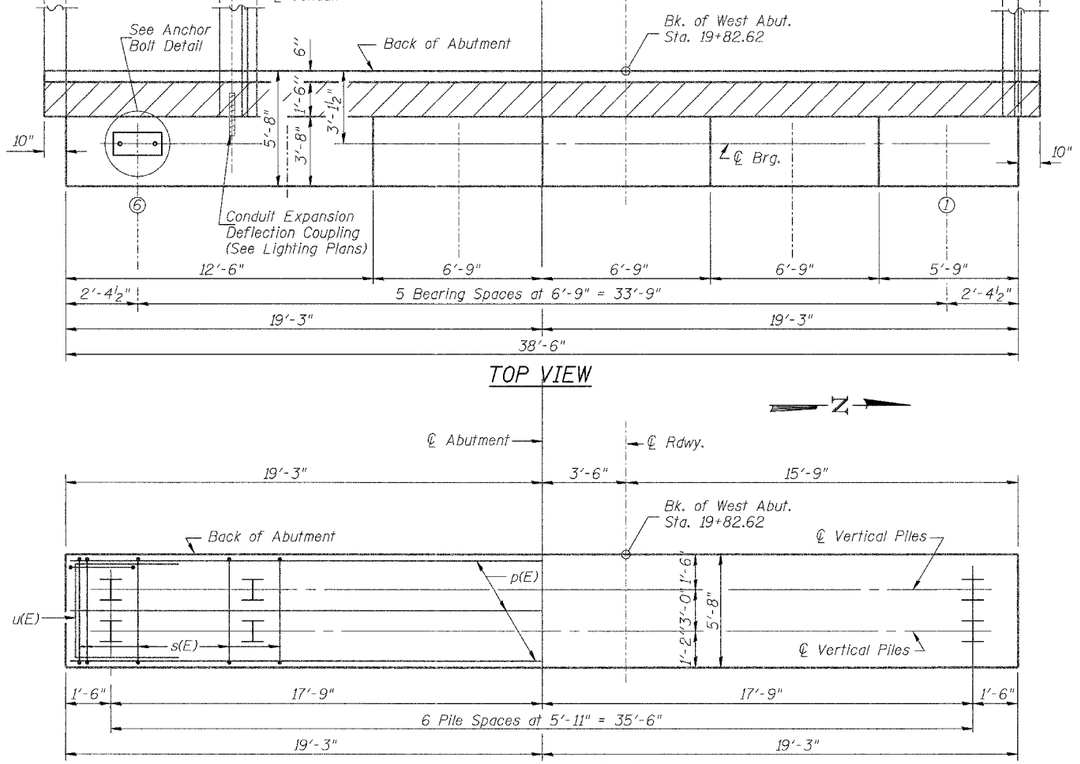

TOP VIEW

PLAN-PILE CAP

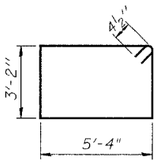

BARS s(E)

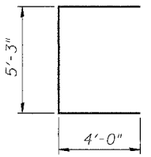

BAR u(E)

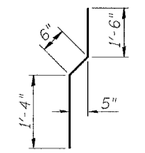

BAR v1(E)

MIN. BAR LAP
#5 = 2'-2"

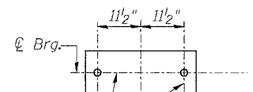

ANCHOR BOLT DETAIL

* d(E) thru d5(E), c(E) and c1(E) bars shall be cast into the hatched block

WEST ABUTMENT BILL OF MATERIAL

Bar	No.	Size	Length	Shape
c(E)	4	#4	2'-3"	
c1(E)	2	#4	5'-8"	
d(E)	4	#5	3'-0"	
d1(E)	4	#5	2'-5"	
d2(E)	4	#4	3'-0"	
d3(E)	4	#4	3'-9"	
d4(E)	2	#6	5'-3"	
d5(E)	2	#4	5'-6"	
h(E)	4	#6	38'-10"	
h1(E)	16	#5	20'-4"	
h6(E)	2	#5	20'-0"	
p(E)	8	#7	38'-3"	
s(E)	40	#4	17'-9"	
u(E)	8	#6	13'-3"	
v(E)	76	#5	6'-3"	
v1(E)	38	#4	3'-4"	
v5(E)	38	#5	2'-6"	
Concrete Structures		Cu. Yd.	37.8	
Reinforcement Bars, Epoxy Coated		Pound	2,630	
Furnishing Steel Piles HP 12x53		Foot	702	
Driving Steel Piles		Foot	702	
Test Pile Steel HP 12x53		Each	1	
Bar Splicers		Each	38	

For details of Bar Splicers, see sheet 25 of 41.

PILE DATA

Type: Steel H12x53
Capacity: Driven to Refusal
Est. Length: 54'
No. Required: 13 plus 1 Test Pile

DESIGNED	JOH
CHECKED	BRT
DRAWN	TC
CHECKED	JOH

WEST ABUTMENT
FAU ROUTE 6145 OVER
BNSF RAILROAD
SECTION 01-00590-00-BR (COUNTY)
LASALLE COUNTY
STATION 21+75.75
STR. NO. 050-8023

HUTCHISON ENGINEERING, INC.
JACKSONVILLE & JOLIET, ILLINOIS

Date: 3 /10 /2006

2190b018

Notes: Hatched area to be poured after superstructure forms have been removed. Quantity of concrete included with Concrete Superstructure.
Space reinforcement in cap to miss anchor bolts.
Pour steps monolithically with cap.
Reinforcement bars designated (E) shall be epoxy coated.
Bars indicated thus 4x2 #5 etc. indicates 4 lines of bars with 2 lengths per line.

General Contractor shall coordinate with Electrical Contractor before embedding the conduits and Junction boxes

ROUTE NO.	SEC	COUNTY	TOTAL SHEETS	SHEET NO.
FAU 6145	*	LASALLE	168	99
FED. ROAD DIST. NO. 3	ILLINOIS	PROJECT		

* 01-00590-00-BR (County)

SHEET NO. 19
41 SHEETS

CONTRACT NO. 87293

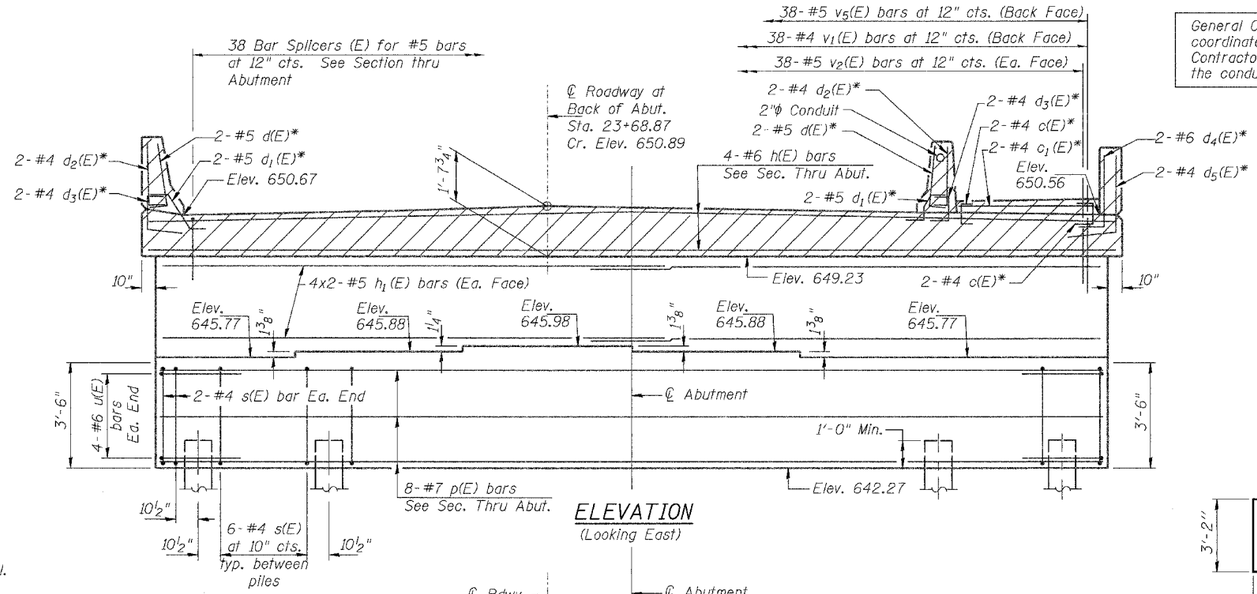

ELEVATION
(Looking East)

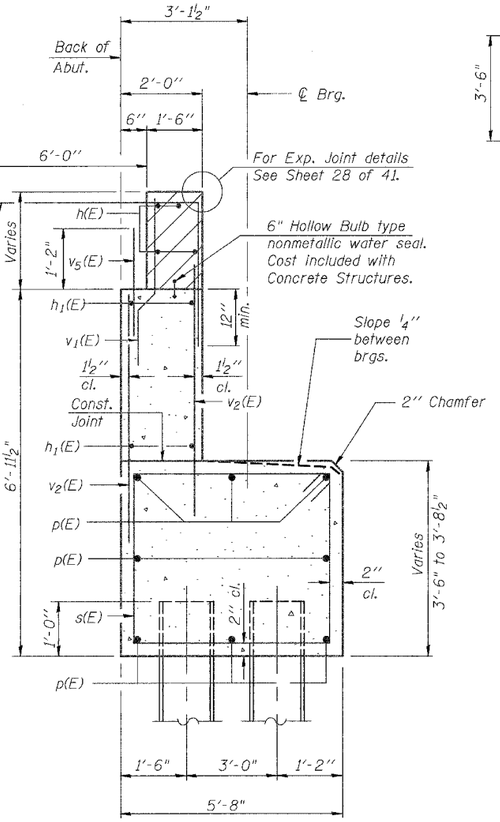

SEC. THRU ABUT.

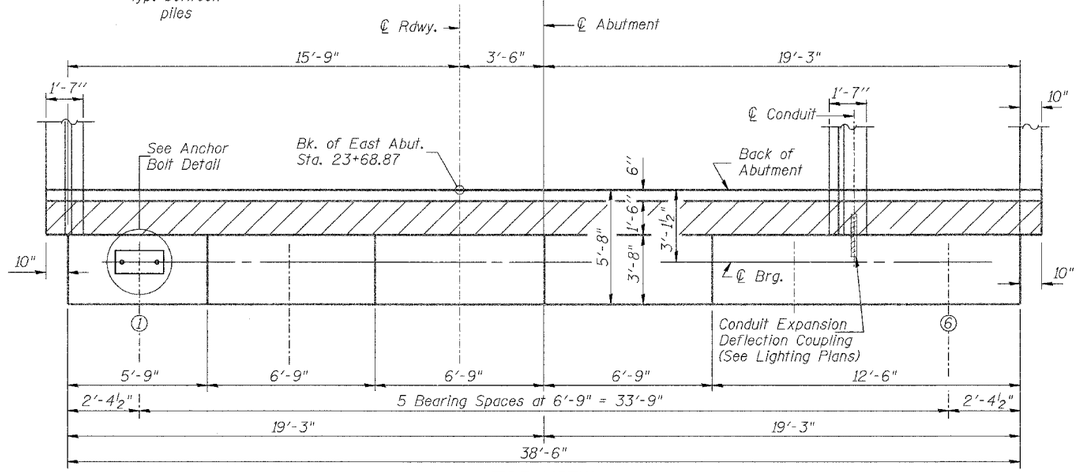

TOP VIEW

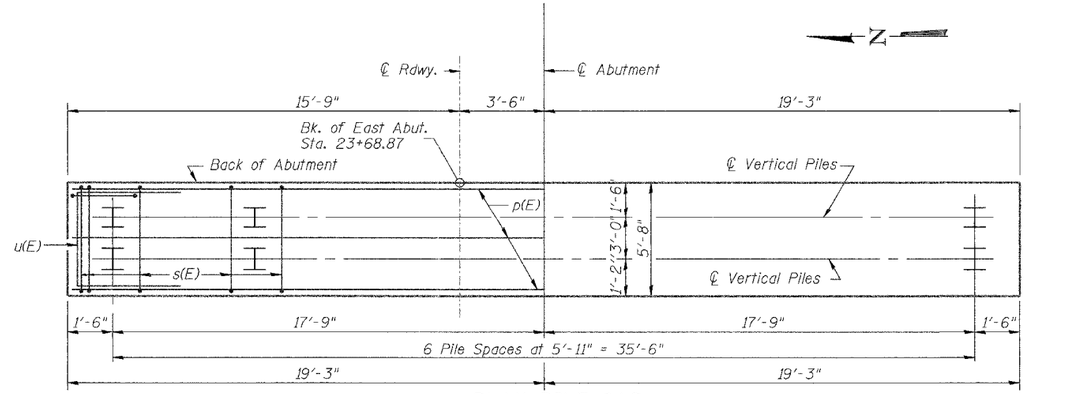

PLAN-PILE CAP

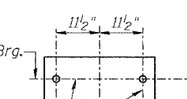

ANCHOR BOLT DETAIL

* d(E) thru d5(E), c(E) and c1(E) bars shall be cast into the hatched block

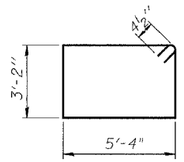

BARS s(E)

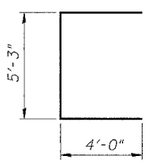

BAR u(E)

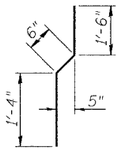

BAR v1(E)

EAST ABUTMENT BILL OF MATERIAL

Bar	No.	Size	Length	Shape
c(E)	4	#4	2'-3"	
c1(E)	2	#4	5'-8"	
d(E)	4	#5	3'-0"	
d1(E)	4	#5	2'-5"	
d2(E)	4	#4	3'-0"	
d3(E)	4	#4	3'-9"	
d4(E)	2	#6	5'-3"	
d5(E)	2	#4	5'-6"	
h(E)	4	#6	38'-10"	
h1(E)	16	#5	20'-4"	
h2(E)	2	#5	20'-0"	
p(E)	8	#7	38'-3"	
s(E)	40	#4	17'-9"	
u(E)	8	#6	13'-3"	
v1(E)	38	#4	3'-4"	
v2(E)	76	#5	6'-6"	
v5(E)	38	#5	2'-6"	
Concrete Structures		Cu. Yd.	38.6	
Reinforcement Bars, Epoxy Coated		Pound	2,650	
Furnishing Steel Piles HP 12x53		Foot	702	
Driving Steel Piles		Foot	702	
Test Pile Steel HP 12x53		Each	1	
Bar Splicers		Each	38	

For details of Bar Splicers, see sheet 25 of 41.

MIN. BAR LAP
#5 = 2'-2"

PILE DATA
Type: Steel H12x53
Capacity: Driven to Refusal
Est. Length: 54'
No. Required: 13 Plus 1 Test Pile

DESIGNED	JOH
CHECKED	BRT
DRAWN	TC
CHECKED	JOH

EAST ABUTMENT
FAU ROUTE 6145 OVER
BNSF RAILROAD
SECTION 01-00590-00-BR (COUNTY)
LASALLE COUNTY
STATION 21+75.75
STR. NO. 050-8023

HUTCHISON ENGINEERING, INC.
JACKSONVILLE & JOLIET, ILLINOIS
Date: 3 /10 /2006

2190b019

Notes: Space Reinforcement in cap to miss anchor bolts.
Pour steps monolithically with cap.

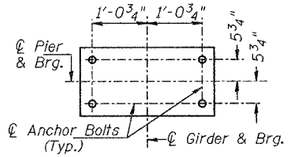

ANCHOR BOLT DETAIL

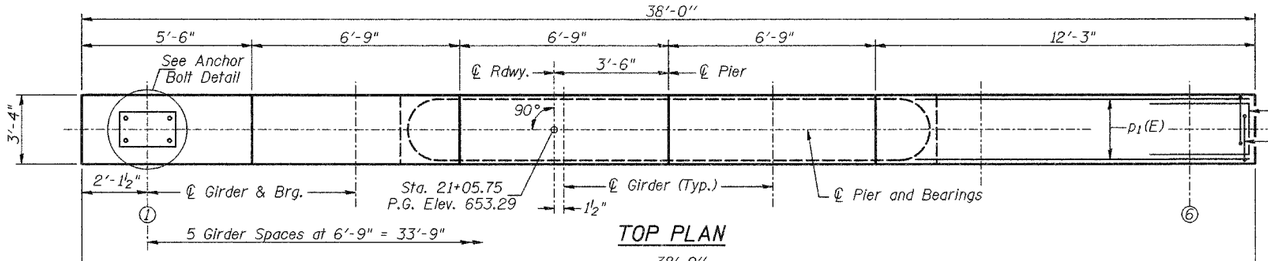

TOP PLAN

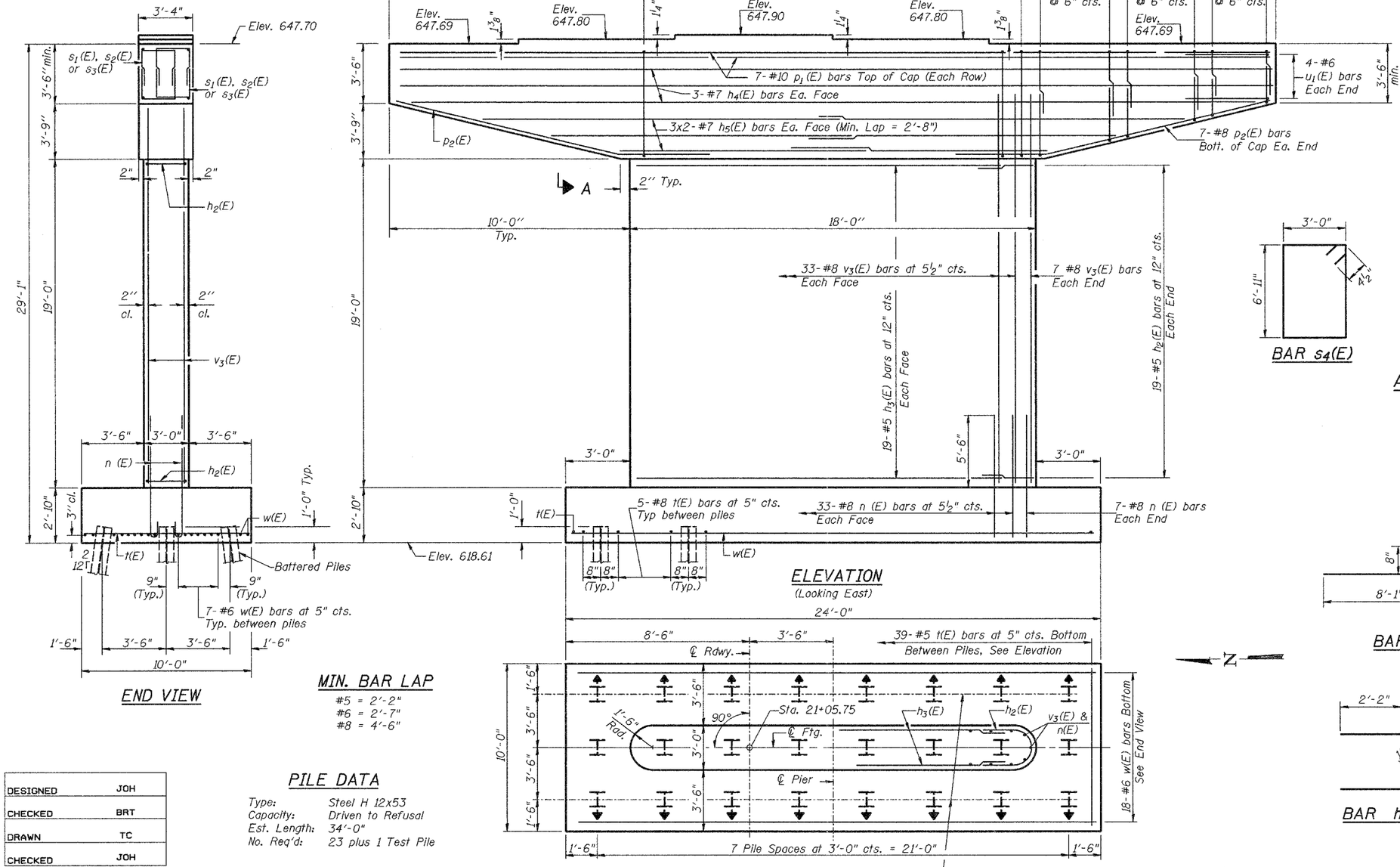

END VIEW

ELEVATION
(Looking East)

FOOTING PLAN

MIN. BAR LAP

#5 = 2'-2"
#6 = 2'-7"
#8 = 4'-6"

PILE DATA

Type: Steel H 12x53
Capacity: Driven to Refusal
Est. Length: 34'-0"
No. Req'd: 23 plus 1 Test Pile

DESIGNED	JOH
CHECKED	BRT
DRAWN	TC
CHECKED	JOH

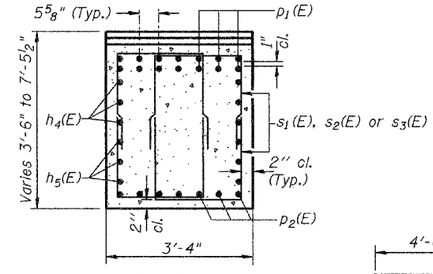

SECTION A-A

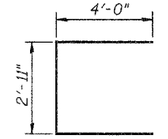

BAR u_1(E)

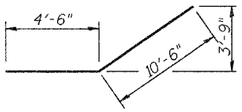

BAR p_2(E)

PIER 1
BILL OF MATERIAL

Bar	No.	Size	Length	Shape
h_2(E)	38	#5	8'-6"	
h_3(E)	38	#5	15'-0"	
h_4(E)	6	#7	37'-6"	
h_5(E)	12	#7	17'-0"	
n (E)	80	#8	9'-0"	
p_1(E)	14	#10	37'-6"	
p_2(E)	14	#8	15'-0"	
s_1(E)	40	#5	8'-3"	
s_2(E)	64	#5	9'-7"	
s_3(E)	64	#5	11'-1"	
s_4(E)	17	#4	20'-7"	
t (E)	39	#8	9'-8"	
u_1(E)	8	#6	10'-11"	
v_3(E)	80	#8	23'-6"	
w (E)	18	#6	23'-8"	
Structure Excavation		Cu. Yd.	65	
Concrete Structures		Cu. Yd.	91.6	
Reinforcement Bars, Epoxy Coated		Pound	15,310	
Furnishing Steel Piles HP 12x53		Foot	782	
Driving Steel Piles		Foot	782	
Test Pile Steel HP 12x53		Each	1	

Reinforcement Bars designated (E) shall be epoxy coated.

Bars indicated thus 2x2-#5 etc. indicates 2 lines of bars with 2 lengths per line.

BAR s_4(E)

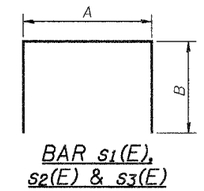

BAR s_1(E), s_2(E) & s_3(E)

A & B DIMENSIONS

Bar	A	B
s_1(E)	2'-1"	3'-1"
s_2(E)	2'-1"	3'-9"
s_3(E)	2'-1"	4'-6"

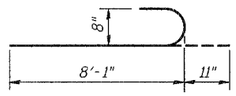

BAR n (E)

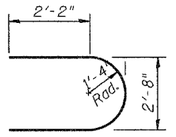

BAR h_2(E)

✱ 01-00590-00-BR (County)
CONTRACT NO. 87293

ROUTE NO.	SEC	COUNTY	TOTAL SHEETS	SHEET NO.
FAU 6145	✱	LASALLE	168	100
FED. ROAD DIST. NO. 3	ILLINOIS	PROJECT		

SHEET NO. 20
41 SHEETS

PIER 1
FAU ROUTE 6145 OVER BNSF RAILROAD
SECTION 01-00590-00-BR (COUNTY)
LASALLE COUNTY
STATION 21+75.75
STR. NO. 050-8023

HUTCHISON ENGINEERING, INC.
JACKSONVILLE & JOLIET, ILLINOIS
Date: 3 /10 /2006

2190b020

Notes: Space Reinforcement in cap to miss anchor bolts.
Pour steps monolithically with cap.

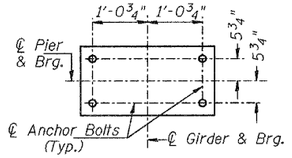

ANCHOR BOLT DETAIL

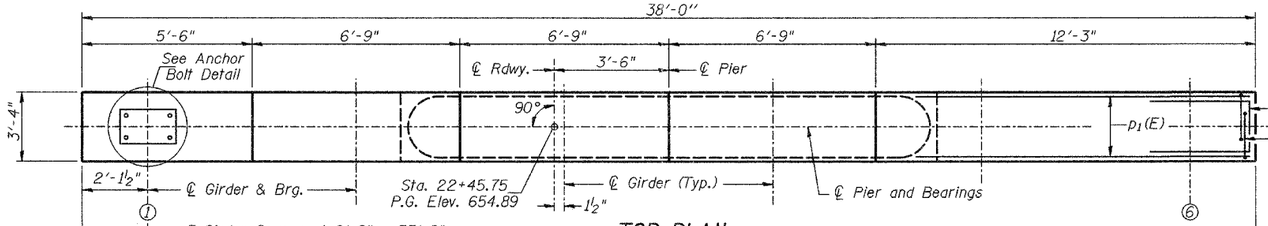

TOP PLAN

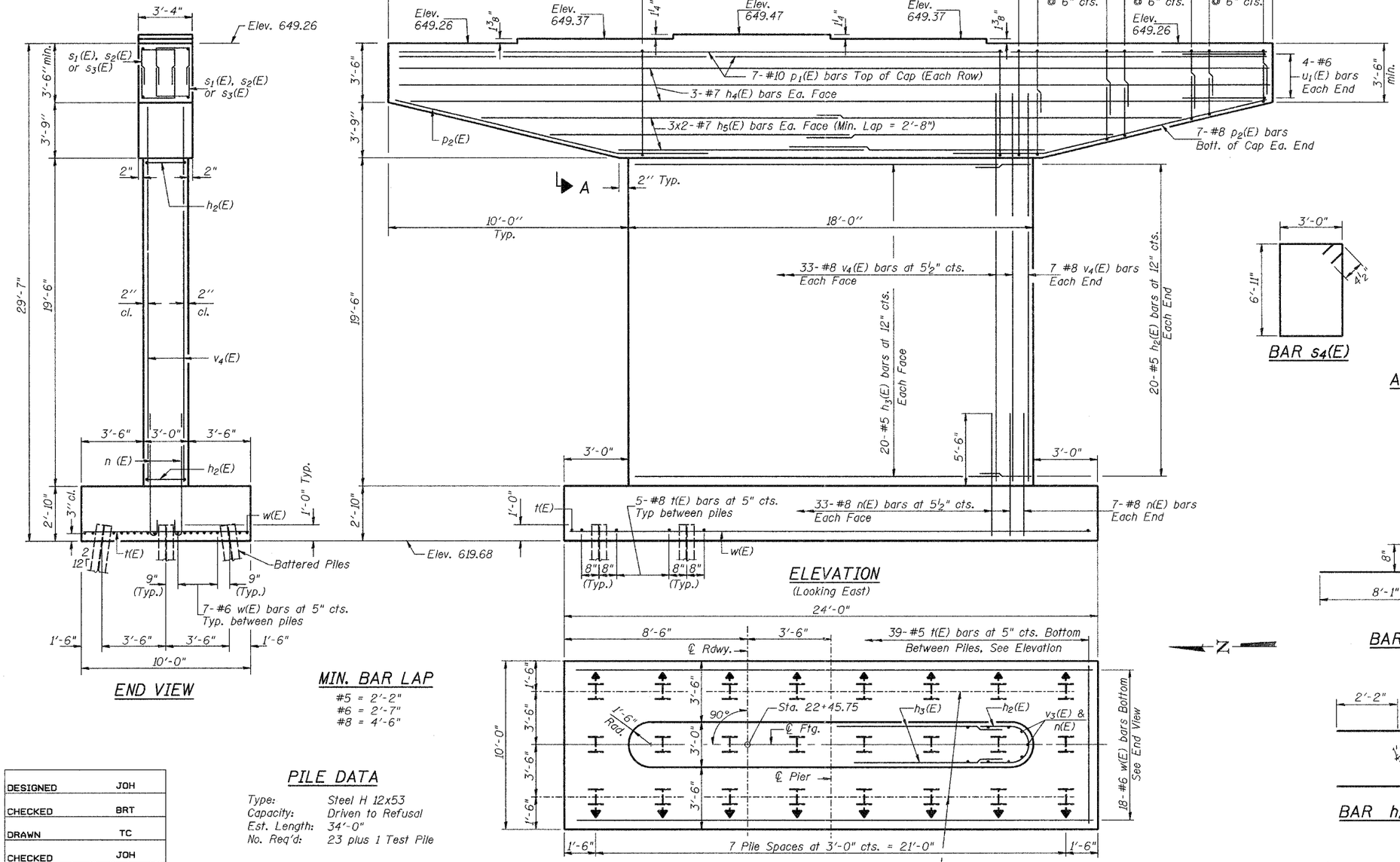

ELEVATION
(Looking East)

END VIEW

FOOTING PLAN

♥ Indicates Batter Pile - 2"/1'-0"

MIN. BAR LAP

#5 = 2'-2"
#6 = 2'-7"
#8 = 4'-6"

PILE DATA

Type: Steel H 12x53
Capacity: Driven to Refusal
Est. Length: 34'-0"
No. Req'd: 23 plus 1 Test Pile

DESIGNED	JOH
CHECKED	BRT
DRAWN	TC
CHECKED	JOH

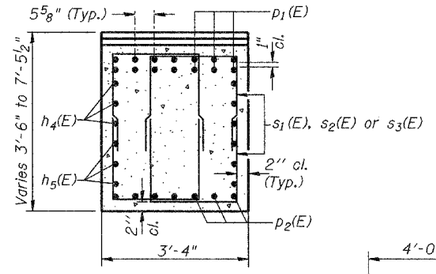

SECTION A-A

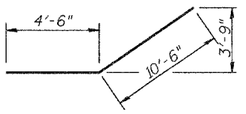

BAR p_2(E)

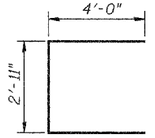

BAR u_1(E)

BAR s_4(E)

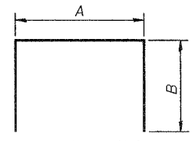

BAR s_1(E), s_2(E) & s_3(E)

A & B DIMENSIONS

Bar	A	B
s_1(E)	2'-1"	3'-1"
s_2(E)	2'-1"	3'-9"
s_3(E)	2'-1"	4'-6"

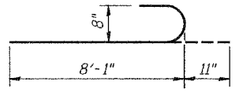

BAR n (E)

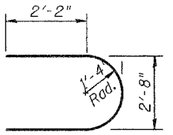

BAR h_2(E)

PIER 2
BILL OF MATERIAL

Bar	No.	Size	Length	Shape
h_2(E)	40	#5	8'-6"	
h_3(E)	40	#5	15'-0"	
h_4(E)	6	#7	37'-6"	
h_5(E)	12	#7	17'-0"	
n (E)	80	#8	9'-0"	
p_1(E)	14	#10	37'-6"	
p_2(E)	14	#8	15'-0"	
s_1(E)	40	#5	8'-3"	
s_2(E)	64	#5	9'-7"	
s_3(E)	64	#5	11'-1"	
s_4(E)	17	#4	20'-7"	
t (E)	39	#8	9'-8"	
u_1(E)	8	#6	10'-11"	
v_4(E)	80	#8	24'-0"	
w (E)	18	#6	23'-8"	
Structure Excavation		Cu. Yd.	60	
Concrete Structures		Cu. Yd.	92.5	
Reinforcement Bars, Epoxy Coated		Pound	15,460	
Furnishing Steel Piles HP 12x53		Foot	782	
Driving Steel Piles		Foot	782	
Test Pile Steel HP 12x53		Each	1	

Reinforcement Bars designated (E) shall be epoxy coated.

Bars indicated thus 2x2-#5 etc. indicates 2 lines of bars with 2 lengths per line.

* 01-00590-00-BR (County)
CONTRACT NO. 87293

ROUTE NO.	SEC	COUNTY	TOTAL SHEETS	SHEET NO.
FAU 6145	*	LASALLE	168	101
FED. ROAD DIST. NO. 3	ILLINOIS	PROJECT		

SHEET NO. 21
41 SHEETS

PIER 2
FAU ROUTE 6145 OVER
BNSF RAILROAD
SECTION 01-00590-00-BR (COUNTY)
LASALLE COUNTY
STATION 21+75.75
STR. NO. 050-8023

HUTCHISON ENGINEERING, INC.
JACKSONVILLE & JOLIET, ILLINOIS
Date: 3 /10 /2006

2190b021

ROUTE NO.	SEC	COUNTY	TOTAL SHEETS	SHEET NO.
FAU 6145	*	LASALLE	168	102
FED. ROAD DIST. NO. 3	ILLINOIS	PROJECT		

SHEET NO. 22
41 SHEETS

* 01-00590-00-BR (County)

CONTRACT NO. 87293

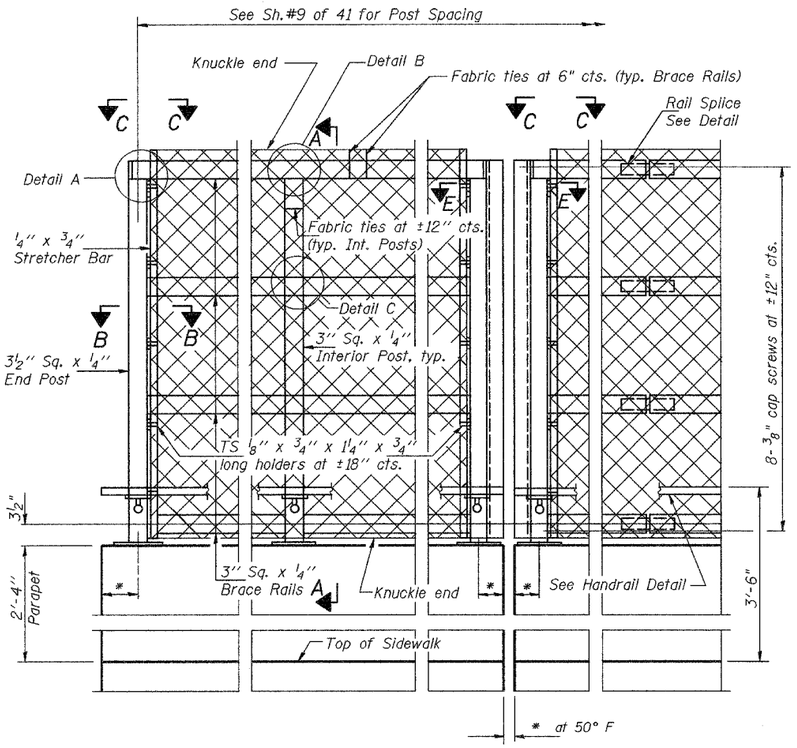

ELEVATION
(Inside Face)

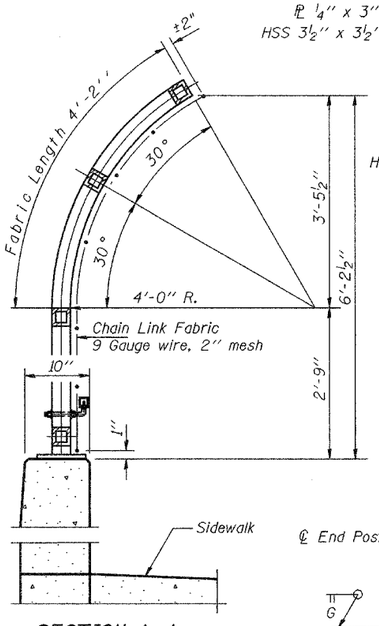

SECTION A-A

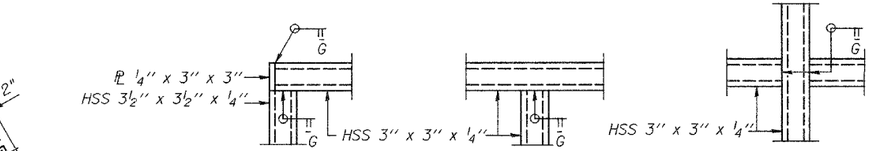

DETAIL A

DETAIL B

DETAIL C

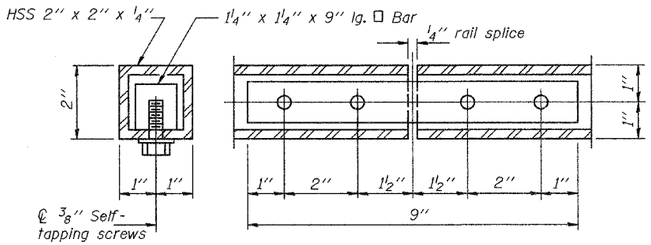

HANDRAIL SPLICE

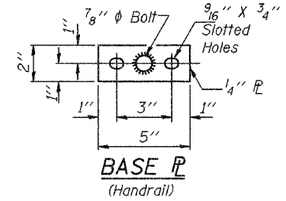

BASE ℄
(Handrail)

NOTES

Railing shall be according to Section 509 of the Standard Specifications, except as noted, and will be paid for at the Contract Unit Price per foot for Bridge Fence Railing.

The 9 gauge fabric ties shall be according to Article 1006.27(d) of the Standard Specifications.

Installation of the chain link fabric shall be according to Section 664 of the Standard Specifications.

Hollow structural sections shall conform to the requirements of ASTM designation A 500, Grade B, structural steel tubing.

All other steel shapes and plates shall conform to the requirements of AASHTO M 270 Grade 36.

The chain link fabric shall be placed along Pedestrian Side as shown on Section A-A.

Stretcher bars shall be used at each end of fabric.

A minimum of one complete turn is required at ends of all fabric ties.

If the option of drilling and epoxy grouting the anchor rods is chosen, the Contractor shall use the capsule or the adhesive cartridge type anchor rods that have been previously tested and given a prior approval by the Department. The Contractor shall install these anchor rods in pre-drilled holes according to the manufacturer's recommendations and procedures. The capsule or the adhesive cartridge shall be sealed with pre-measured amounts of the adhesive chemical.

Space reinforcement to miss anchor rods.

All posts, railing, splices, anchor devices, and plates shall be galvanized after shop fabrication according to AASHTO M 111 and ASTM A 385. All bolts, nuts, washers, and anchor rods shall be galvanized according to AASHTO M 232 except stainless steel bolts as noted.

Vent holes for galvanizing shall be placed in the posts and rails at locations that will not allow the accumulation of moisture in the members.

The chain link fabric shall conform to the requirements of Article 1006.27(a)(1)a, b or c of the Standard Specifications.

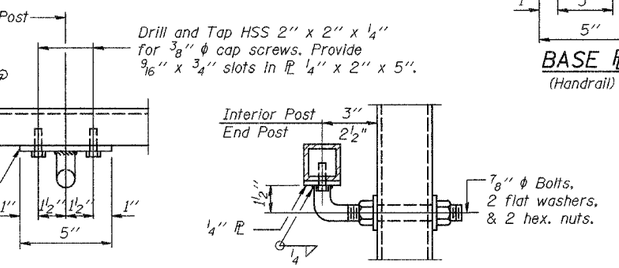

SECTION E-E
(At Expansion Joint)

HANDRAIL DETAIL

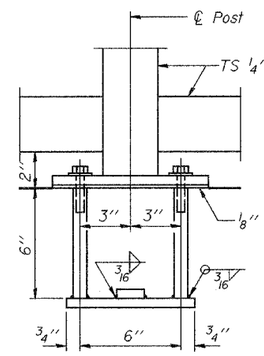

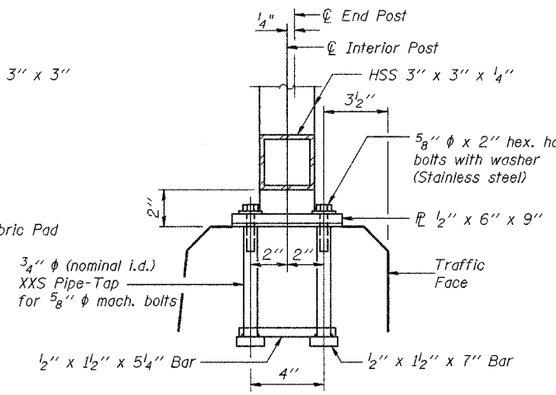

ANCHOR BOLT DETAILS

In lieu of the cast-in-place anchor device shown, the Contractor has the option of drilling and epoxy grouting 5/8" ϕ anchor rods. Embedment shall be according to the manufacturer's specifications.

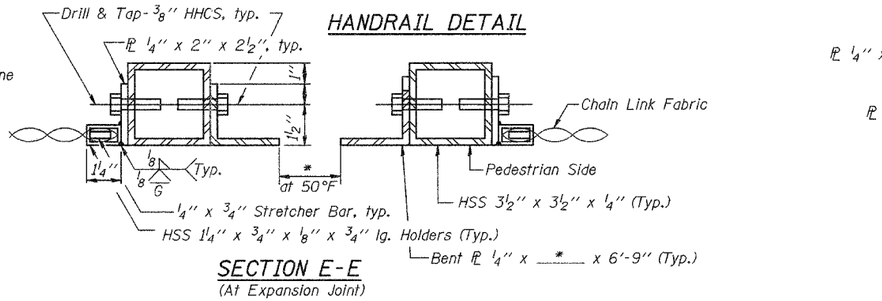

SECTION B-B

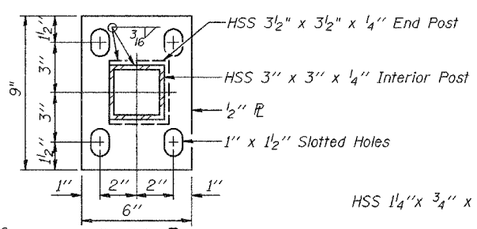

*Variable - See Plans
(10'-0" Maximum Post Spacing)

BASE ℙ

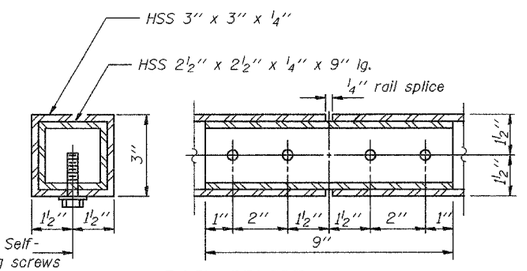

RAIL SPLICE

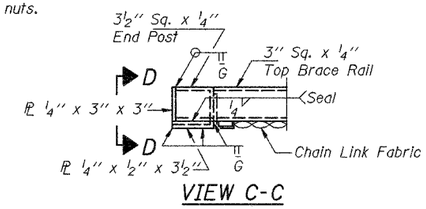

VIEW C-C

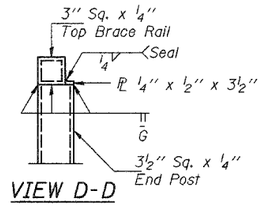

VIEW D-D

BILL OF MATERIAL

Item	Unit	Quantity
Bridge Fence Railing	Foot	380

DESIGNED	JOH
CHECKED	BRT
DRAWN	TC
CHECKED	JOH

R-32 10-31-02

2190b022

BRIDGE FENCE RAILING
PARAPET MOUNTED
FAU ROUTE 6145 OVER
BNSF RAILROAD
SECTION 01-00590-00-BR (COUNTY)
LASALLE COUNTY
STATION 21+75.75
STR. NO. 050-8023

HUTCHISON ENGINEERING, INC.
JACKSONVILLE & JOLIET, ILLINOIS
Date: 3 /10 /2006

ROUTE NO.	SEC	COUNTY	TOTAL SHEETS	SHEET NO.
FAU 6145	*	LASALLE	168	103
FED. ROAD DIST. NO. 3	ILLINOIS	PROJECT		

SHEET NO. 23
41 SHEETS

* 01-00590-00-BR (County)

CONTRACT NO. 87293

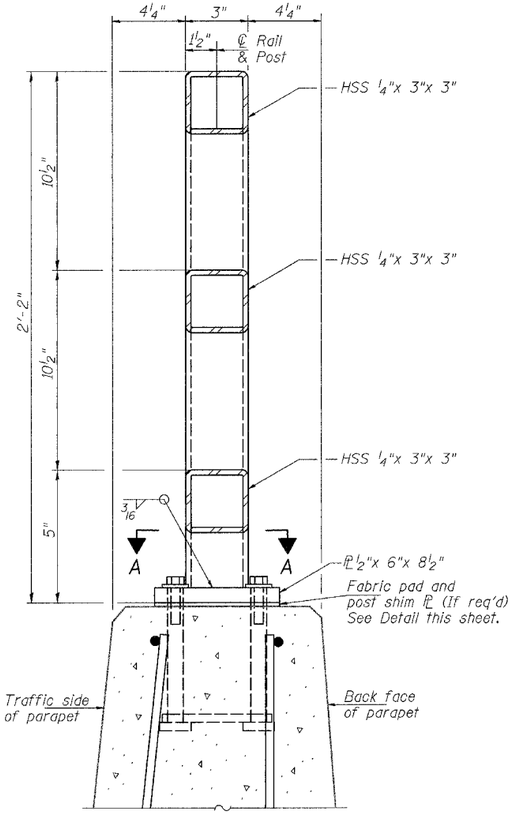

SECTION THRU RAILING

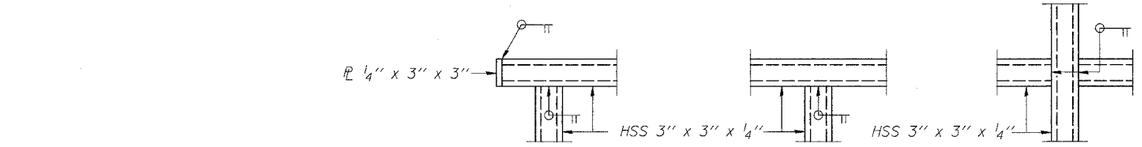

DETAIL A DETAIL B DETAIL C

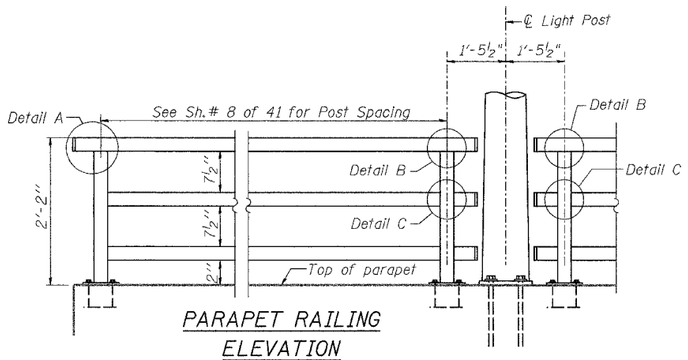

PARAPET RAILING ELEVATION
(Inside Face of Three Element Rail)

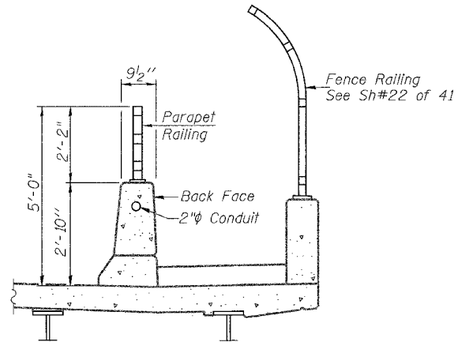

SECTION THRU DECK

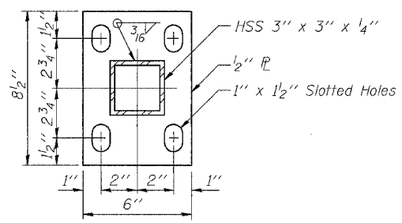

SECTION A-A

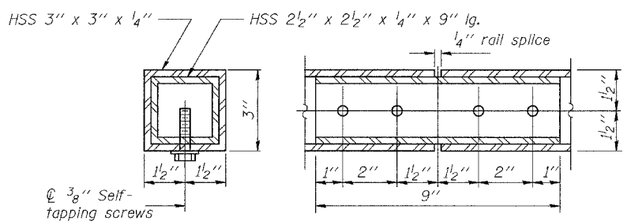

RAIL SPLICE

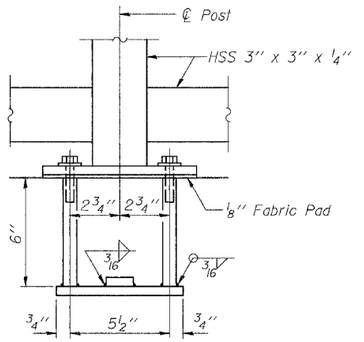

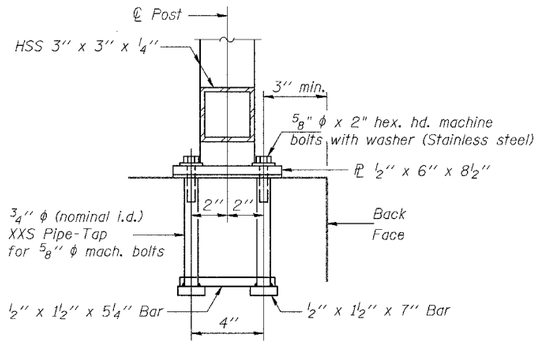

ANCHOR BOLT DETAILS

In lieu of the cast-in-place anchor device shown, the Contractor has the option of drilling and epoxy grouting ⅝" ϕ anchor rods. Embedment shall be according to the manufacturer's specifications.

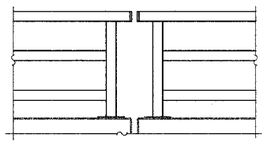

PARAPET RAILING
ELEVATION AT EXPANSION JOINT

NOTES

Railing shall be according to Section 509 of the Standard Specifications, except as noted, and will be paid for at the Contract Unit Price per foot for Bicycle Railing.

Hollow structural sections shall conform to the requirements of ASTM designation A 500, Grade B, structural steel tubing.

All other steel shapes and plates shall conform to the requirements of AASHTO M 270 Grade 36.

If the option of drilling and epoxy grouting the anchor rods is chosen, the Contractor shall use the capsule or the adhesive cartridge type anchor rods that have been previously tested and given a prior approval by the Department. The Contractor shall install these anchor rods in pre-drilled holes according to the manufacturer's recommendations and procedures. The capsule or the adhesive cartridge shall be sealed with pre-measured amounts of the adhesive chemical.

Space reinforcement to miss anchor rods.

All posts, railing, splices, anchor devices, and plates shall be galvanized after shop fabrication according to AASHTO M 111 and ASTM A 385. All bolts, nuts, washers, and anchor rods shall be galvanized according to AASHTO M 232 except stainless steel bolts as noted.

Vent holes for galvanizing shall be placed in the posts and rails at locations that will not allow the accumulation of moisture in the members.

BILL OF MATERIAL

Item	Unit	Quantity
Parapet Railing	Foot	380

DESIGNED	JOH
CHECKED	BRT
DRAWN	TC
CHECKED	JOH

PARAPET RAILING
FAU ROUTE 6145 OVER
BNSF RAILROAD
SECTION 01-00590-00-BR (COUNTY)
LASALLE COUNTY
STATION 21+75.75
STR. NO. 050-8023

HUTCHISON ENGINEERING, INC.
JACKSONVILLE & JOLIET, ILLINOIS

Date: 3 /10 /2006

2190b023

The Illinois Coil-Lock Anchor Bolt is a proprietary item which is the property of the Illinois Department of Transportation. Use, reproduction or disclosure without express written permission is prohibited and protected under Federal copyright laws. The production and the fabrication of this bolt for use on highway projects in the State of Illinois shall be permitted and there shall be no incurred charges or fees to the manufacturer or the fabricator for producing or fabricating this bolt.

ROUTE NO.	SEC	COUNTY	TOTAL SHEETS	SHEET NO.
FAU 6145	*	LASALLE	168	104
FED. ROAD DIST. NO. 3		ILLINOIS	PROJECT	

SHEET NO. 24
41 SHEETS

* 01-00590-00-BR (County)

CONTRACT NO. 87293

D	E	H	K	"d"
1"	$1\frac{1}{8}$"	$\frac{13}{16}$"	$1\frac{3}{4}$"	$\frac{1}{4}$"
$1\frac{1}{4}$"	$1\frac{3}{8}$"	$1\frac{1}{16}$"	2"	$\frac{3}{8}$"
$1\frac{1}{2}$"	$1\frac{5}{8}$"	$1\frac{5}{16}$"	$2\frac{1}{8}$"	$\frac{1}{2}$"
2"	$2\frac{1}{8}$"	$1\frac{13}{16}$"	$2\frac{7}{8}$"	$\frac{1}{2}$"
$2\frac{1}{2}$"	$2\frac{5}{8}$"	$2\frac{5}{16}$"	$3\frac{3}{8}$"	1"

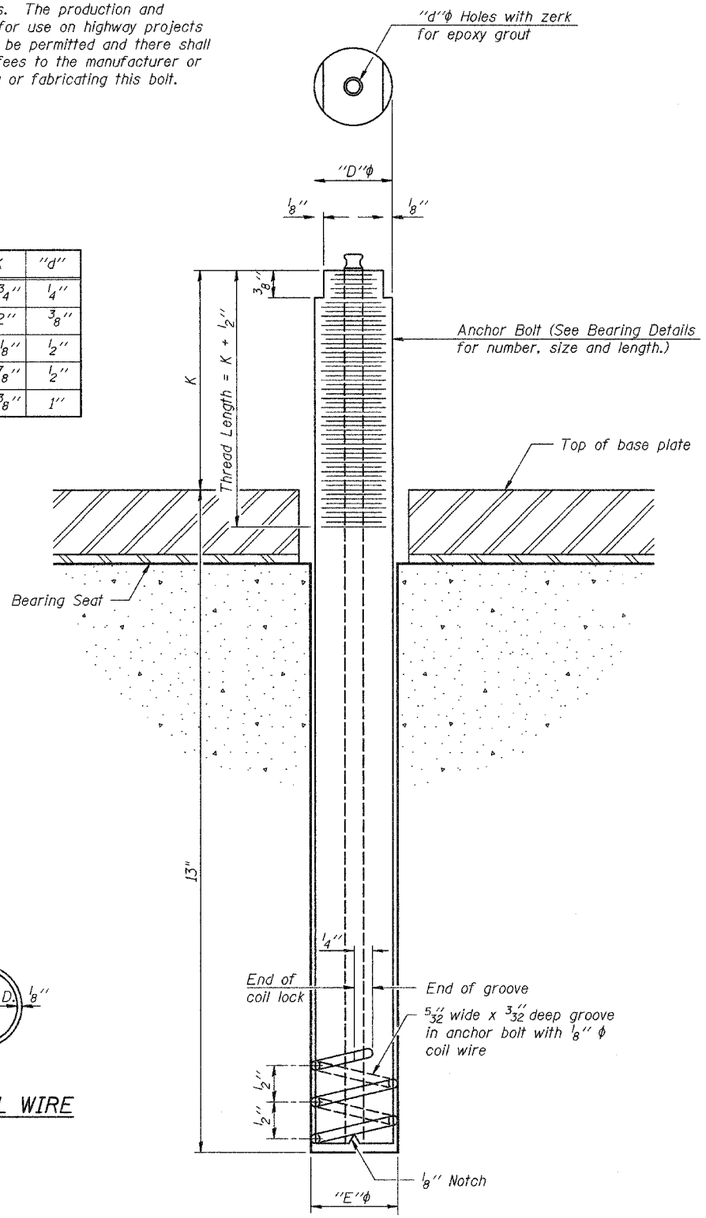

ILLINOIS COIL-LOCK ANCHOR BOLT

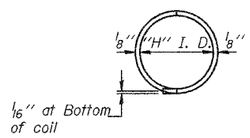

PLAN-COIL WIRE

MATERIALS FOR ILLINOIS COIL-LOCK ANCHOR BOLT

The anchor bolt shall be fabricated from cold drawn or hot finished seamless carbon steel mechanical tubing conforming to ASTM A 519, Grade 1026, CW and supplied with hexagonal nuts and cut washers.

The coil wire shall be made of any suitable soft steel wire.

The finished anchor bolt shall be cleaned of rust and other foreign materials and wrapped or packaged to prevent contamination until they are installed.

The epoxy grout shall be a two-component, epoxy resin bonding system conforming to ASTM C 881, Type I, Grade 1 and of a Class suitable for the temperature at installation.

INSTALLATION PROCEDURE for the ILLINOIS COIL-LOCK ANCHOR BOLT

1. With the coil wire in place, the bolt shall be inserted into the hole and turned clockwise to a snug fit in the hole. Nut and washer shall be placed on the bolt. The nut shall be tensioned until the steel base plates are held securely to the concrete bearing seat.
2. Epoxy grout shall be pumped through the zerk fitting with a pressure gun. Pumping shall continue until the epoxy overflows the hole around the bolt shank. After pumping is discontinued, excess epoxy shall be immediately wiped off.

ALTERNATE ANCHOR BOLTS

The Contractor may use, at his option, the capsule or the adhesive cartridge type anchor rods that have been previously tested and given a prior approval by the Department. The Contractor shall install these anchor rods in pre-drilled holes according to the manufacturer's recommendations and procedures.

The capsule or the adhesive cartridge type anchor rods shall be a two part system composed of:

1. A threaded rod stud with nut and washer of the type specified.
2. A sealed glass capsule or a sealed glass adhesive cartridge containing premeasured amounts of the adhesive chemical.

Location	Type
W. Abut.	A 307
Pier 1	A 307
Pier 2	A 307
E. Abut.	A 307

ASTM F 1554 Grade 105, ASTM A 449 and AASHTO M 314 Grade 105 anchor bolts may be substituted for the anchor bolts shown above.

GENERAL NOTES

Holes in the masonry for anchor bolts shall be drilled through the base plates to the diameter and depth shown or according to the manufacturer's recommendation after beams or girders have been erected and adjusted.

Prior to setting the bolts, the holes shall be dry and all dust and loose particles shall be removed by the use of compressed air or vacuuming.

The anchor bolts, furnished and installed and including the epoxy grout or capsules shall not be paid for separately but shall be included in the unit bid price for Furnishing and Erecting Structural Steel.

DESIGNED	JOH
CHECKED	BRT
DRAWN	TC
CHECKED	JOH

ABB-1 4-30-99

2190b024

ANCHOR BOLT DETAILS
FOR BEARINGS
FAU ROUTE 6145 OVER
BNSF RAILROAD
SECTION 01-00590-00-BR (COUNTY)
LASALLE COUNTY
STATION 21+75.75
STR. NO. 050-8023

HUTCHISON ENGINEERING, INC.
JACKSONVILLE & JOLIET, ILLINOIS
Date: 3 /10 /2006

ROUTE NO.	SEC	COUNTY	TOTAL SHEETS	SHEET NO.
FAU 6145	*	LASALLE	168	105
FED. ROAD DIST. NO. 2	ILLINOIS	PROJECT		

SHEET NO. 25
41 SHEETS

* 01-00590-00-BR (County)

CONTRACT NO. 87293

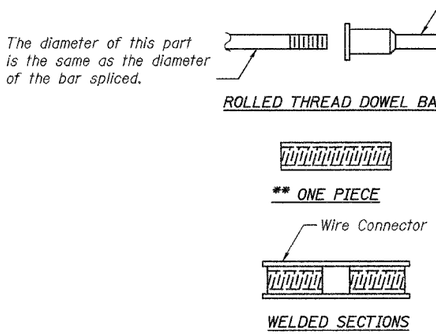

BAR SPLICER ASSEMBLY ALTERNATIVES

** Heavy Hex Nuts conforming to ASTM A 563, Grade C, D or DH may be used.

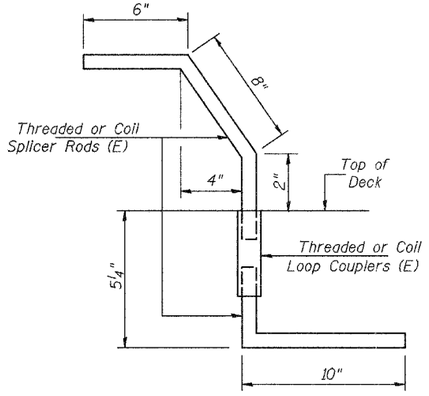

BAR SPLICER ASSEMBLY (A)

(416 required in parapet)

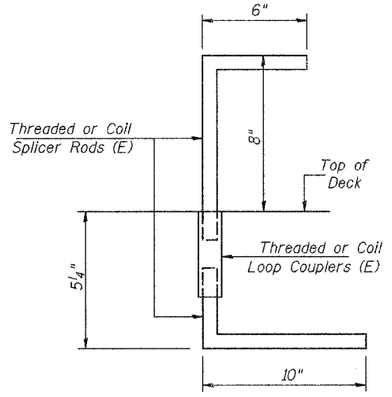

BAR SPLICER ASSEMBLY (B)

(416 required in parapet)

NOTES

Bar splicer assemblies shall be of an approved type and shall develop in tension at least 125 percent of the yield strength of the lapped reinforcement bars.

Splicer rods shall be of minimum 60 ksi yield strength, threaded or coiled full length.

All reinforcement bars shall be lapped and tied to the splicer rods or dowel bars.

Bar splicer assemblies shall be epoxy coated according to the requirements for reinforcement bars.

Other systems of similar design may be submitted to the Engineer for approval. Approval shall be based on certified test results from an approved testing laboratory that the proposed bar splicer assembly satisfies the following requirements:

① Minimum Capacity (Tension in kips) = $1.25 \times fy \times A_t$

② Minimum *Pull-out Strength (Tension in kips) = $1.25 \times fs_{allow} \times A_t$

Where fy = Yield strength of lapped reinforcement bars in ksi.

fs_{allow} = Allowable tensile stress in lapped reinforcement bars in ksi (Service Load)

A_t = Tensile stress area of lapped reinforcement bars.

* = 28 day concrete

BAR SPLICER ASSEMBLIES			
Bar Size to be Spliced	Splicer Rod or Dowel Bar Length	Strength Requirements	
		Min. Capacity kips - tension	Min. Pull-Out Strength kips - tension
#4	1'-8"	14.7	5.9
#5	2'-0"	23.0	9.2
#6	2'-7"	33.1	13.3
#7	3'-5"	45.1	18.0
#8	4'-6"	58.9	23.6
#9	5'-9"	75.0	30.0
#10	7'-3"	95.0	38.0
#11	9'-0"	117.4	46.8

Bar splicer assemblies shall be according to Section 508 of the Standard Specifications, except as noted. The furnishing and installation of bar splicer assemblies will be measured and paid for at the contract unit price each for "BAR SPLICERS."

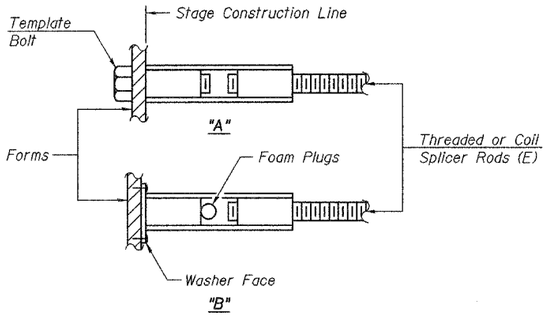

INSTALLATION AND SETTING METHODS

"A" : Set bar splicer assembly by means of a template bolt.

"B" : Set bar splicer assembly by nailing to wood forms or cementing to steel forms.

(E) : Indicates epoxy coating.

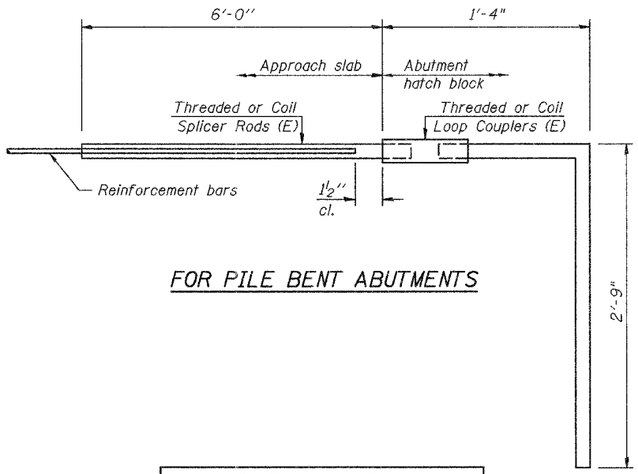

FOR PILE BENT ABUTMENTS

Bar Splicer for #5 bar
Min. Capacity = 23.0 kips - tension
Min. Pull-out Strength = 9.2 kips - tension
No. Required = 76

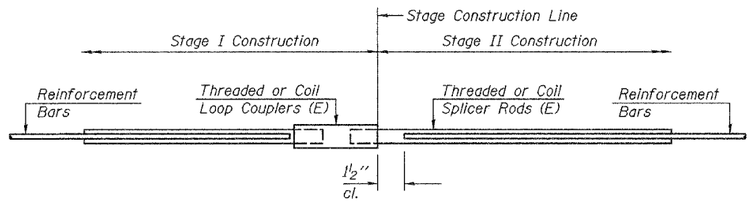

STANDARD

DESIGNED	JOH
CHECKED	BRT
DRAWN	TC
CHECKED	JOH

2190b025

BAR SPLICER ASSEMBLY DETAILS
FAU ROUTE 6145 OVER
BNSF RAILROAD
SECTION 01-00590-00-BR (COUNTY)
LASALLE COUNTY
STATION 21+75.75
STR. NO. 050-8023

HUTCHISON ENGINEERING, INC.
JACKSONVILLE & JOLIET, ILLINOIS

Date: 3 /10 /2006

ROUTE NO.	SEC	COUNTY	TOTAL SHEETS	SHEET NO.
FAU 6145	*	LASALLE	168	106
FED. ROAD DIST. NO. 3	ILLINOIS	PROJECT		

SHEET NO. 26
41 SHEETS

* 01-00590-00-BR (County)

CONTRACT NO. 87293

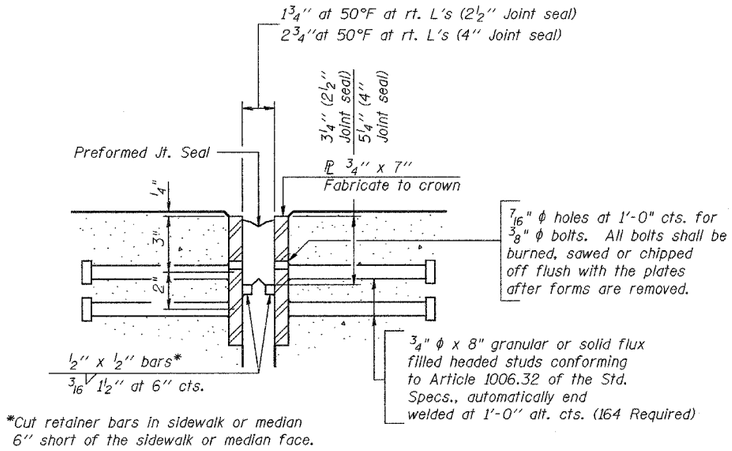

*Cut retainer bars in sidewalk or median 6" short of the sidewalk or median face.

SECTION THRU EXPANSION JOINT

(2 1/2" and 4" joint seals)

Bridge Joint System (Expansion)		
Design Movement	Required Preformed Joint Seal Size	Required Strip Seal Rated movement
1"	2 1/2"	1"
1 5/8"	4"	2"

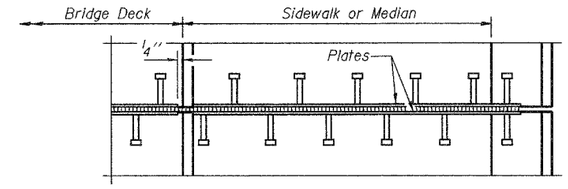

PLAN AT SIDEWALK OR MEDIAN

GENERAL NOTES

Furnish steel plates in segments of 20 feet maximum length. Maximum space between installed segments shall be 3/16". Seal space with silicone sealant suitable for structural steel.

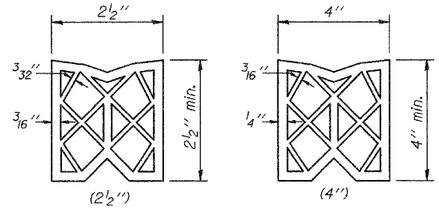

PREFORMED JOINT SEAL

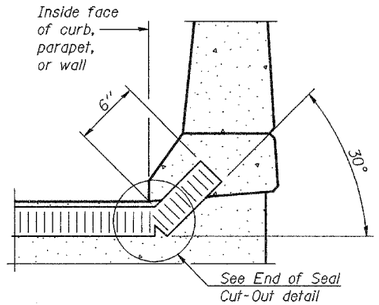

AT CURB, PARAPET, OR WALL

(Showing seal)

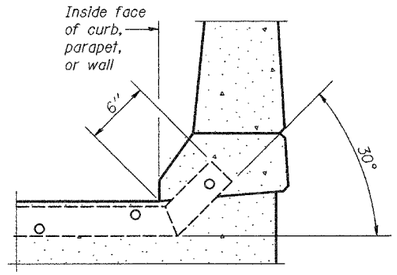

AT CURB, PARAPET, OR WALL

(Showing plate)

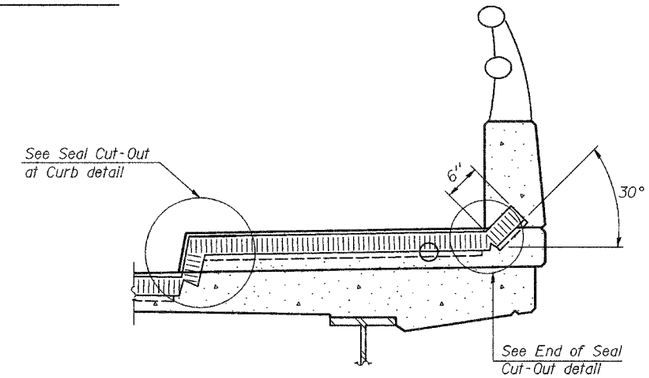

AT SIDEWALK OR MEDIAN*

(Showing plate and seal)

TYPICAL END TREATMENTS

* Shorter plates with a single row of studs at 12" centers may be necessary on medians which are shallower than 9". See manufacturer's recommendation.

BILL OF MATERIAL

Item	Unit	Total
Bridge Joint System (Expansion), 1 5/8"	FOOT	39

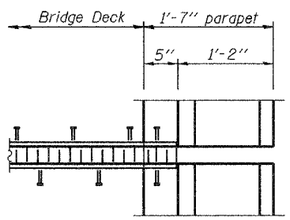

PLAN AT PARAPET

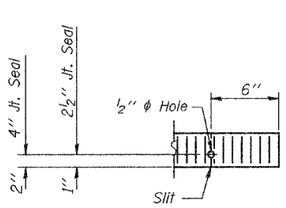

END OF SEAL CUT-OUT

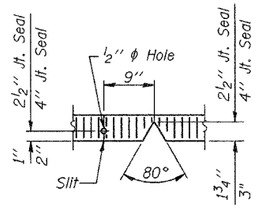

SEAL CUT-OUT AT CURB

DESIGNED	JOH
CHECKED	BRT
DRAWN	TC
CHECKED	JOH

EJ-BJS 9-01-03

2190b026

(Sheet 1 of 2)

BRIDGE JOINT SYSTEM - EXPANSION (PREFORMED JOINT SEAL)

FAU ROUTE 6145 OVER
BNSF RAILROAD
SECTION 01-00590-00-BR (COUNTY)
LASALLE COUNTY
STATION 21+75.75
STR. NO. 050-8023

HUTCHISON ENGINEERING, INC.
JACKSONVILLE & JOLIET, ILLINOIS
Date: 3 /10 /2006

ROUTE NO.	SEC	COUNTY	TOTAL SHEETS	SHEET NO.
FAU 6145	*	LASALLE	168	107
FED. ROAD DIST. NO. 3	ILLINOIS	PROJECT		

SHEET NO. 27
41 SHEETS

* 01-00590-00-BR (County)

CONTRACT NO. 87293

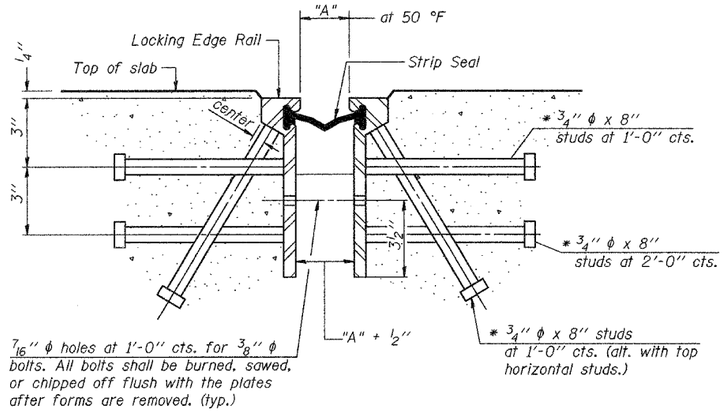

Required Strip Seal rated movement	"A"
1"	1 1/8"
2"	1 3/4"

SECTION THRU ROLLED RAIL EXP. JOINT

(202 Studs Required)

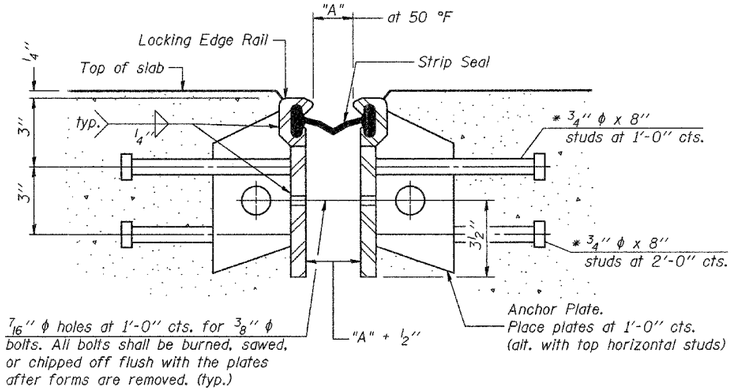

SECTION THRU WELDED RAIL EXP. JOINT

(122 Studs Required)
(80 Anchor Plates Required)

* Granular or solid flux filled headed studs conforming to Article 1006.32 of the Std. Specs., automatically end welded.

GENERAL NOTES

The strip seal shall be made continuous and shall have a minimum thickness of 1/4". The configuration of the strip seal shall match the configuration of the Locking Edge Rails.

The height and thickness of the Locking Edge Rails shown are minimum dimensions. The actual configuration of the Locking Edge Rails and matching strip seal may vary from manufacturer to manufacturer. Flanged edge rails will not be allowed.

Locking Edge Rails may be spliced at slope discontinuities and stage construction joints.

The manufacturer's recommended installation methods shall be followed.

The joint opening and deck dimensions detailed on the superstructure are based on a preformed joint seal. If the contractor elects to use the alternate strip seal joint, the opening and deck dimensions shall be modified according to the dimensions detailed on this sheet. Required modifications shall be made at no additional cost to the State.

ROLLED (EXTRUDED) RAIL

WELDED RAIL

ANCHOR PL
(for welded rail)

LOCKING EDGE RAILS

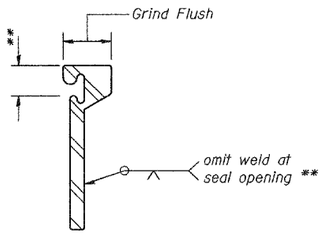

LOCKING EDGE RAIL SPLICE

The inside of the locking edge rail groove shall be free of weld residue.

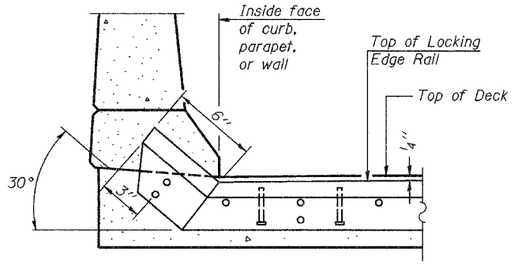

AT CURB, PARAPET, OR WALL

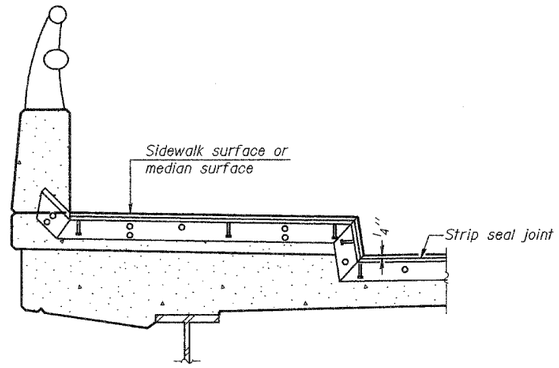

AT SIDEWALK OR MEDIAN*

* Shorter plates with a single row of studs at 12" centers may be necessary on medians which are shallower than 9". See manufacturer's recommendation.

TYPICAL END TREATMENTS

DESIGNED	JOH
CHECKED	BRT
DRAWN	TC
CHECKED	JOH

EJ-BJS 9-01-03

2190b027

(Sheet 2 of 2)

BRIDGE JOINT SYSTEM - EXPANSION (ALTERNATE-STRIP SEAL)
FAU ROUTE 6145 OVER
BNSF RAILROAD
SECTION 01-00590-00-BR (COUNTY)
LASALLE COUNTY
STATION 21+75.75
STR. NO. 050-8023

HUTCHISON ENGINEERING, INC.
JACKSONVILLE & JOLIET, ILLINOIS

Date: 3 /10 /2006

ROUTE NO.	SEC	COUNTY	TOTAL SHEETS	SHEET NO.
FAU 6145	*	LASALLE	168	108
FED. ROAD DIST. NO. 3	ILLINOIS	PROJECT		

SHEET NO. 28
41 SHEETS

* 01-00590-00-BR (County)

CONTRACT NO. 87293

Joint Size	"C" at 50°F	"D" at 50°F
2"	2"	$1\frac{1}{2}$" Min.
$2\frac{1}{2}$"	$2\frac{1}{2}$"	$1\frac{3}{4}$" Min.
4"	3"	$2\frac{1}{2}$" Min.

INSTALLATION NOTES

(1) Install continuous seal in roadway, parapet, curb, and sidewalk.

(2) Install anchor blocks as indicated.

NOTE A: Maximum spacing of anchor bolts shall be 12" centers.

SKEW LIMITATIONS

The details of the anchor blocks and the elastomeric membrane in the parapet, as shown, are for up to 50° skews.

For skews greater than 50°, the anchor blocks and the elastomeric membrane, installed according to dimension "D", might require modifications to ensure a minimum clearance of $1\frac{1}{2}$" from centerline of anchor studs to edge of parapet opening. The anchor blocks and the elastomeric membrane shall also be installed to the top of the parapet with the anchor studs spaced at ±12" cts.

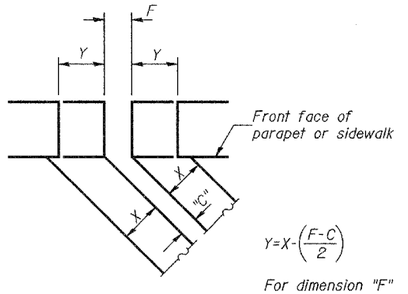

For dimension "F" see sheet # of 41

FORMING BLOCKOUT SKETCH

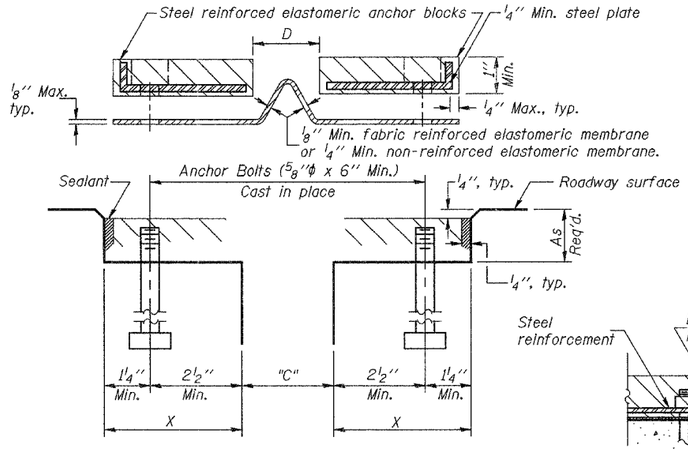

CROSS SECTION

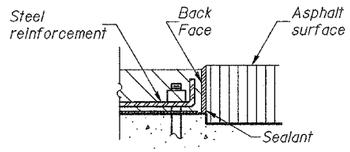

ANCHOR BLOCK WITH ASPHALT SURFACE

GENERAL NOTES

Continuous Seal Neoprene Expansion Joint shall consist of molded anchor blocks of elastomer and steel, field assembled over continuous lengths of elastomeric membrane.

The elastomeric membrane shall be premolded with a single or a double upward convolution that will have a "memory" to return to its molded position upon joint closure.

The convolution length shall be such that the extended length will not be greater than the manufactured length when the joint is fully expanded in its design range and will not protrude above the anchor blocks when the joint is fully compressed.

Joint openings shall be adjusted according to Article 503.10(c) of the Standard Specifications when the deck is poured at an ambient temperature other than 50° F.

The parapet and roadway membrane shall be made continuous by an approved vulcanizing process. Lapping will not be permitted.

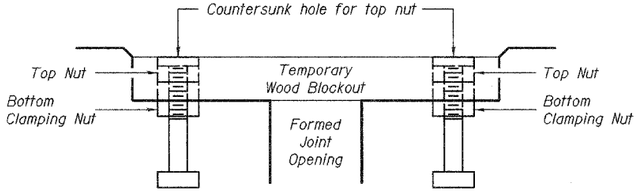

Note: Stud needs to be threaded lower to allow for use of clamping nut.

Anchor studs should be stainless

RECOMMENDED BLOCKOUT DETAIL

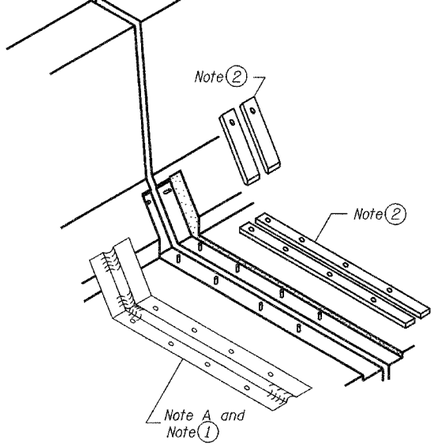

AT PARAPET

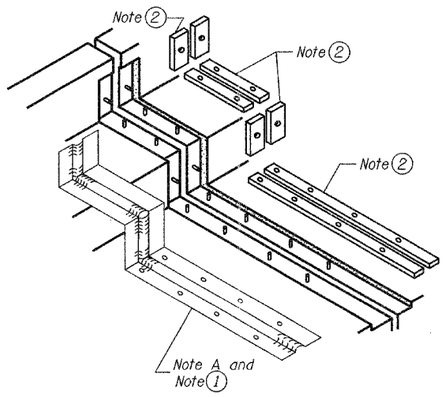

AT SIDEWALK OR MEDIAN

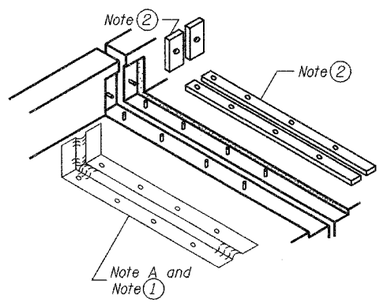

AT WALL

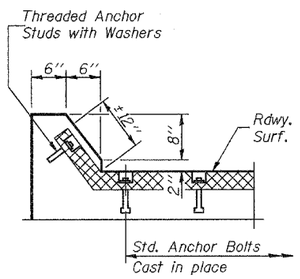

AT CURB

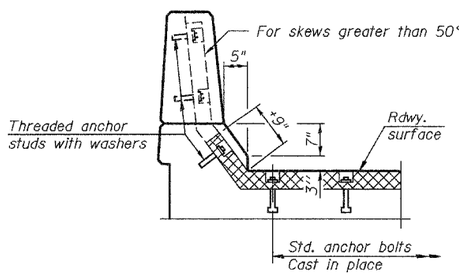

AT PARAPET

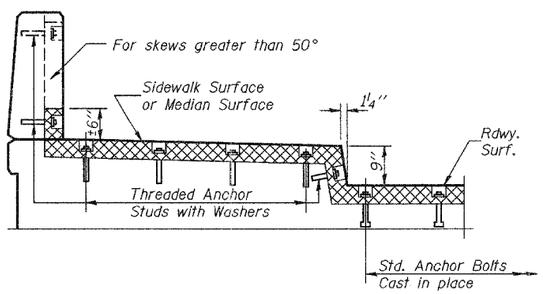

AT SIDEWALK OR MEDIAN

TYPICAL END TREATMENTS

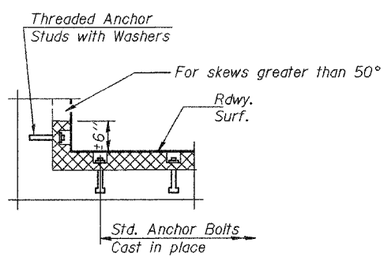

AT WALL

DESIGNED	JOH
CHECKED	BRT
DRAWN	TC
CHECKED	JOH

EJ-CS 9-01-03

2190b028

CONTINUOUS SEAL TYPE NEOPRENE EXPANSION JOINTS FAU ROUTE 6145 OVER BNSF RAILROAD SECTION 01-00590-00-BR (COUNTY) LASALLE COUNTY STATION 21+75.75 STR. NO. 050-8023

HUTCHISON ENGINEERING, INC.
JACKSONVILLE & JOLIET, ILLINOIS

Date: 3 /10 /2006

ROUTE NO.	SEC	COUNTY	TOTAL SHEETS	SHEET NO.
FAU 6145	*	LASALLE	168	109
FED. ROAD DIST. NO. 3	ILLINOIS	PROJECT		

SHEET NO. 29
41 SHEETS

* 01-00590-00-BR (County)

CONTRACT NO. 87293

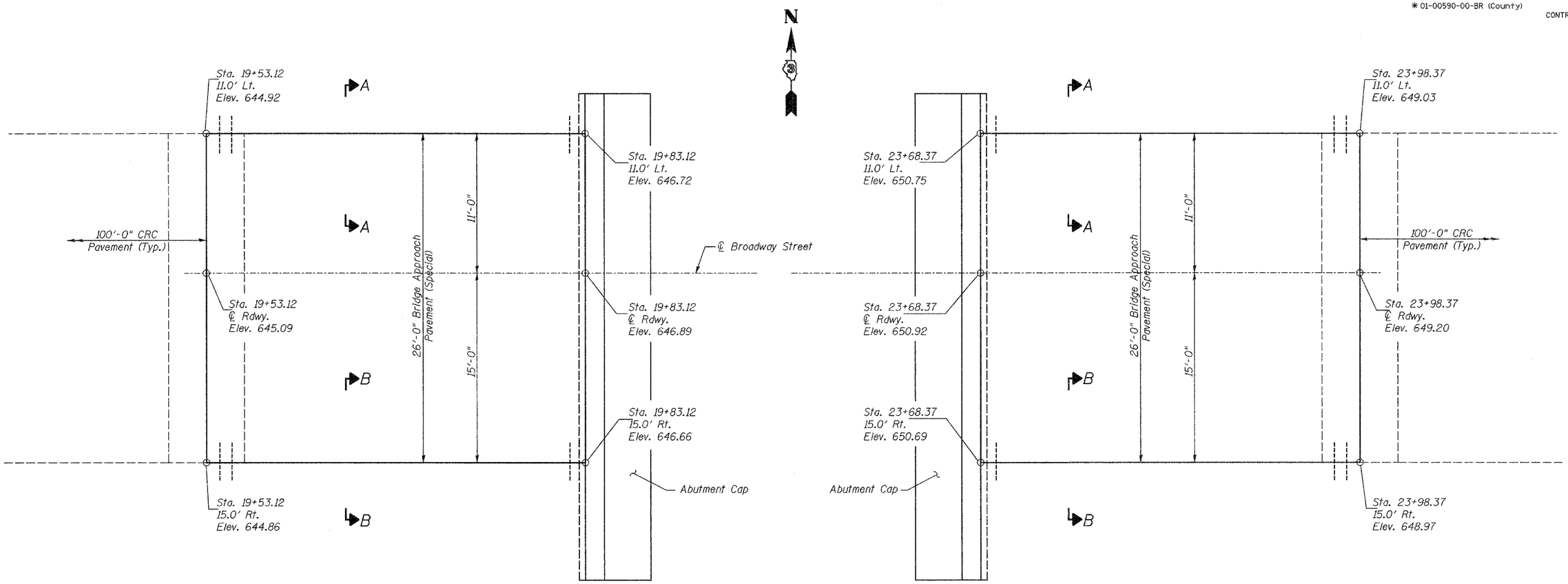

PLAN - BRIDGE APPROACH PAVEMENT

For additional details see Standard 420401.

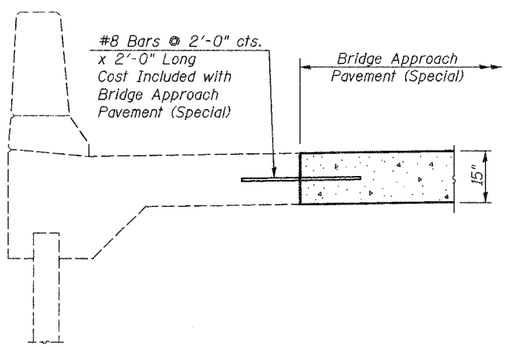

SECTION A-A

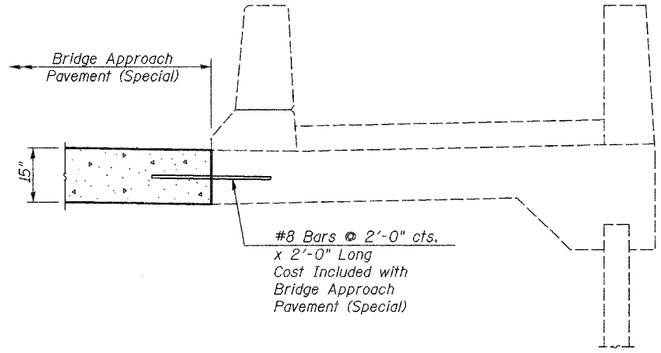

SECTION B-B

BILL OF MATERIAL

Item	Unit	Total
Bridge Approach Pavement (Special)	Sq. Yd.	173

FOR INFORMATION ONLY

BRIDGE APPROACH PAVEMENT (SPECIAL)
FAU ROUTE 6145
SECTION 01-00590-00-BR (COUNTY)
LASALLE COUNTY
STATION 21+75.75
STR. NO. 050-8023

DESIGNED	JOH
CHECKED	BRT
DRAWN	TC & TD
CHECKED	JOH

HUTCHISON ENGINEERING, INC.
JACKSONVILLE & JOLIET, ILLINOIS
Date: 3 /10 /2006

2190b029

ROUTE NO.	SEC	COUNTY	TOTAL SHEETS	SHEET NO.
FAU 6145	*	LASALLE	168	110
FED. ROAD DIST. NO. 3	ILLINOIS	PROJECT		

* 01-00590-00-BR (County)

SHEET NO. 30
41 SHEETS

CONTRACT NO. 87293

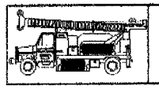

Midwest Testing Services, Inc.
3705 Progress Blvd.
Peru, IL 61354

Phone: 815-223-6696
Fax: 815-223-6659
E-Mail: Midwest @ TheRamp.net

BORING LOG

Sheet 1 of 3

Client: Hutchinson Engineering
Project Name: F.A.U. 6145 Section: 01-00590-00-BR
Project Site: Broadway Street Bridge Streator, IL
STATION 26+60, 20' LT.

Boring No. B-1
Surface Elev. 624.52
Auger Depth 46.00 Rotary Depth NA
Start Date 05/27/03 Finish Date 05/27/03

Location: See Location Map
East Abutment

DRILLED BY: Randy Safranski
Diedrich D-120

(DEPTH) *ELEV.	DESCRIPTION OF MATERIALS	Graphic Log	Depth in feet	Sample No.	Sample Type	Qu (TSF)	N Value (Blows)	Bulge / Shear	Moisture (%)	Dry Density (PCF)	REMARKS
624.52											
623.52			1								
622.52	Stiff Black gray silty clay fill		2								
621.52			3	1	SS	2.0	8	B/S	25		
620.52			4								
619.52			5	2	SS	2.3	9	B	24		
618.52			6								
617.52			7								
616.52	Very stiff Brown gray silty clay		8	3	SS	3.1	14	B	22		
615.52			9								
614.52			10								
613.52			11	4	SS	3.3	15	B/S	19		
612.52	Stiff Gray silty clay till		12								
611.52			13	5	SS	1.6	8	B	23		
610.52	Very stiff Gray silty clay till w/ silt lenses		14								
609.52			15								
608.52			16	6	SS	5.2	19	B	18		
607.52	Loose-medium dense Brown sand		17								
606.52			18	7	SS	---	10	---	19		
605.52	Loose-medium dense Gray silt		19								
604.52			20	8	SS	---	10	---	22		

Water Table

Groundwater Data: Water after auger removal 16' below top of ground.
Comments:

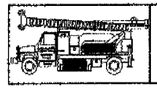

Midwest Testing Services, Inc.
3705 Progress Blvd.
Peru, IL 61354

Phone: 815-223-6696
Fax: 815-223-6659
E-Mail: Midwest @ TheRamp.net

BORING LOG

Sheet 2 of 3

Client: Hutchinson Engineering
Project Name: F.A.U. 6145 Section: 01-00590-00-BR
Project Site: Broadway Street Bridge Streator, IL
STATION 26+60, 20' LT.

Boring No. B-1
Surface Elev. 624.52
Auger Depth 46.00 Rotary Depth NA
Start Date 05/27/03 Finish Date 05/27/03

Location: See Location Map
East Abutment

DRILLED BY: Randy Safranski
Diedrich D-120

(DEPTH) ELEV.	DESCRIPTION OF MATERIALS	Graphic Log	Depth in feet	Sample No.	Sample Type	Qu (TSF)	N Value (Blows)	Bulge / Shear	Moisture (%)	Dry Density (PCF)	REMARKS
603.52											
602.52	Loose-medium dense Gray silt & fine sand		22								
601.52			23	9	SS	---	10	---	23		
600.52	Loose-medium dense Gray fine sand		24								
599.52			25	10	SS	---	10	---	19		
598.52			26								
597.52			27								
596.52			28	11	SS	---	11	---	21		
595.52	Medium dense Gray silt & fine sand		29								
594.52			30	12	SS	---	14	---	19		
593.52			31								
592.52			32								
591.52			33	13	SS	---	17	---	19		
590.52			34								
589.52	Medium dense Gray silt		35	14	SS	---	11	---	21		
588.52			36								
587.52			37								
586.52	Medium dense Gray sand		38	15	SS	---	12	---	18		
585.52			39								
584.52			40								
583.52			41	16	SS	---	17	---	17		
	Hard gray shale										

Groundwater Data: Water after auger removal 16' below top of ground.
Comments:

DESIGNED	JOH
CHECKED	BRT
DRAWN	TC
CHECKED	JOH

/structure/2190b030

BORINGS
FAU ROUTE 6145 OVER
BNSF RAILROAD
SECTION 01-00590-00-BR (COUNTY)
LASALLE COUNTY
STATION 21+75.75
STR. NO. 050-8023

HUTCHISON ENGINEERING, INC.
JACKSONVILLE & JOLIET, ILLINOIS
Date: 3 /10 /2006

...\structure\2190b030.dgn 03/10/2006 02:32:30 PM

ROUTE NO.	SEC	COUNTY	TOTAL SHEETS	SHEET NO.
FAU 6145	*	LASALLE	168	111
FED. ROAD DIST. NO. 3	ILLINOIS	PROJECT		

* 01-00590-00-BR (County)

SHEET NO. 31
41 SHEETS

CONTRACT NO. 87293

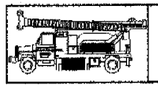

Midwest Testing Services, Inc.
3705 Progress Blvd.
Peru, IL 61354

Phone: 815-223-6696
Fax: 815-223-6659
E-Mail: Midwest @ TheRamp.net

BORING LOG

Sheet 3 of 3

Client: Hutchinson Engineering
Project Name: F.A.U. 6145 Section: 01-00590-00-BR
Project Site: Broadway Street Bridge Streator, IL
STATION 26+60, 20' LT.

Location: See Location Map
East Abutment

Boring No. B-1
Surface Elev. 624.52
Auger Depth 46.00 Rotary Depth NA
Start Date 05/27/03 Finish Date 05/27/03

DRILLED BY: Randy Safranski
Diedrich D-120

(DEPTH) ELEV.	DESCRIPTION OF MATERIALS	Graphic Log	Depth in feet	Sample No.	Sample Type	Qu (TSF)	N Value (Blows)	Bulge / Shear	Moisture (%)	Dry Density (PCF)	REMARKS
582.52											
581.52	Hard Gray shale		43	17	SS	---	110 6"	---	13		
580.52			44								
579.52			45	18	SS	---	148 6"	---	13		
578.52	Bottom of boring		46								
577.52			47								
576.52			48								
575.52			49								
574.52			50								
573.52			51								
572.52			52								
571.52			53								
570.52			54								
569.52			55								
568.52			56								
567.52			57								
566.52			58								
565.52			59								
564.52			60								
563.52			61								
562.52			62								

Groundwater Data: Water after auger removal 16' below top of ground.
Comments:

Midwest Testing Services, Inc.
3705 Progress Blvd.
Peru, IL 61354

Phone: 815-223-6696
Fax: 815-223-6659
E-Mail: Midwest @ TheRamp.net

BORING LOG

Sheet 1 of 2

Client: Hutchinson Engineering
Project Name: F.A.U. 6145 Section: 01-00590-00-BR
Project Site: Broadway Street Bridge Streator, IL
STATION 25+40, 22' LT.

Location: See Location Map
Pier #9

Boring No. B-2
Surface Elev. 623.44
Auger Depth 41.00 Rotary Depth NA
Start Date 05/27/03 Finish Date 05/27/03

DRILLED BY: Randy Safranski
Diedrich D-120

(DEPTH) *ELEV.	DESCRIPTION OF MATERIALS	Graphic Log	Depth in feet	Sample No.	Sample Type	Qu (TSF)	N Value (Blows)	Bulge / Shear	Moisture (%)	Dry Density (PCF)	REMARKS
623.44											
622.44	Medium stiff Black-brown cindery fill		1								
621.44			2								
620.44			3	1	SS	0.8	6	B	24		
619.44	Medium stiff Brown silty clay		4								
618.44			5	2	SS	0.8	5	B	26		
617.44			6								
616.44	Hard Gray brown silty clay		7	3	SS	4.9	13	B	22		
615.44			8								
614.44			9								
613.44	Very stiff-hard Gray silty clay till		10	4	SS	2.3	8	B	17		
612.44			11								
611.44			12								
610.44			13	5	SS	4.8	16	B	19		
609.44	Medium dense Gray silt		14								
608.44			15								
607.44	Medium dense Brown fine sand		16	6	SS	---	12	---	12		Water Table
606.44			17								
605.44	Loose Gray sand & silt		18	7	SS	---	7	---	17		
604.44			19								
603.44	Loose Gray silt		20	8	SS	---	6	---	25		

Groundwater Data: Water after auger removal 15' below top of ground.
Comments:

DESIGNED	JOH
CHECKED	BRT
DRAWN	TC
CHECKED	JOH

/structure/2190b030

BORINGS
FAU ROUTE 6145 OVER
BNSF RAILROAD
SECTION 01-00590-00-BR (COUNTY)
LASALLE COUNTY
STATION 21+75.75
STR. NO. 050-8023

HUTCHISON ENGINEERING, INC.
JACKSONVILLE & JOLIET, ILLINOIS
Date: 3 /10 /2006

...\structure\2190b030.dgn 03/10/2006 02:35:02 PM

ROUTE NO.	SEC	COUNTY	TOTAL SHEETS	SHEET NO.
FAU 6145	*	LASALLE	168	112
FED. ROAD DIST. NO. 3	ILLINOIS	PROJECT		

* 01-00590-00-BR (County)

SHEET NO. 32
41 SHEETS

CONTRACT NO. 87293

Midwest Testing Services, Inc.
3705 Progress Blvd.
Peru, IL 61354
Phone: 815-223-6696
Fax: 815-223-6659
E-Mail: Midwest @ TheRamp.net

BORING LOG

Sheet 2 of 2

Client: Hutchinson Engineering
Project Name F.A.U. 6145 Section: 01-00590-00-BR
Project Site: Broadway Street Bridge Streator, IL
STATION 25+40, 22' LT.

Boring No. B-2
Surface Elev. 623.44
Auger Depth 41.00 Rotary Depth NA
Start Date 05/27/03 Finish Date 05/27/03

Location: See Location Map
Pier #9

DRILLED BY: Randy Safranski
Diedrich D-120

(DEPTH) ELEV.	DESCRIPTION OF MATERIALS	Graphic Log	Depth in feet	Sample No.	Sample Type	Qu (TSF)	N Value (Blows)	Bulge / Shear	Moisture (%)	Dry Density (PCF)	REMARKS
602.44			22								
601.44			23	9	SS	---	6	---	23		
600.44			24								
599.44	Loose Gray silt		25								
598.44			26	10	SS	---	5	---	24		
597.44			27								
596.44			28	11	SS	---	10	---	22		
595.44			29								
594.44			30								
593.44			31	12	SS	---	18	---	20		
592.44			32								
591.44			33								
590.44	Medium dense Gray fine-medium sand		34	13	SS	---	22	---	18		
589.44			35								
588.44			36								
587.44			37	14	SS	---	29	---	17		
586.44			38								
585.44			39	15	SS	---	95/6"	---	16		
584.44	Hard Gray sandy shale		40								
583.44			41	16	SS		110/6"		14		
582.44	Bottom of boring										

Groundwater Data: Water after auger removal 15' below top of ground.
Comments:

Midwest Testing Services, Inc.
3705 Progress Blvd.
Peru, IL 61354
Phone: 815-223-6696
Fax: 815-223-6659
E-Mail: Midwest @ TheRamp.net

BORING LOG

Sheet 1 of 2

Client: Hutchinson Engineering
Project Name F.A.U. 6145 Section: 01-00590-00-BR
Project Site: Broadway Street Bridge Streator, IL
STATION 25+40, 25' RT.

Boring No. B-3
Surface Elev. 622.92
Auger Depth 41.00 Rotary Depth NA
Start Date 05/31/03 Finish Date 05/31/03

Location: See Location Map
Between Pier #7 & #8

DRILLED BY: Randy Safranski
Diedrich D-120

(DEPTH) *ELEV.	DESCRIPTION OF MATERIALS	Graphic Log	Depth in feet	Sample No.	Sample Type	Qu (TSF)	N Value (Blows)	Bulge / Shear	Moisture (%)	Dry Density (PCF)	REMARKS
622.92			1								
621.92	Stiff Black silty clay		2								
620.92			3	1	SS	1.9	6	B/S	26		
619.92			4								
618.92	Very stiff-hard Brown-gray silty clay		5	2	SS	2.3	11	B	19		
617.92			6								
616.92			7								
615.92			8	3	SS	5.8	18	B	19		
614.92			9								
613.92	Very stiff-hard Gray silty clay		10								
612.92			11	4	SS	5.0	12	B	21		
611.92	Medium dense Brown sand		12								
610.92	Very stiff-hard Gray silty clay till		13	5	SS	5.6	24	B	14		
609.92			14								
608.92			15	6	SS	---	25	---	18		
607.92			16								
606.92			17								
605.92	Medium dense Brown fine-medium sand		18	7	SS	---	19	---	18		
604.92			19								
603.92			20								
602.92				8	SS	---	14	---	21		

Water Table

Groundwater Data: Water after auger removal 19' below top of ground.
Comments:

DESIGNED	JOH
CHECKED	BRT
DRAWN	TC
CHECKED	JOH

/structure/2190b030

...\structure\2190b030.dgn 03/10/2006 02:35:21 PM

BORINGS
FAU ROUTE 6145 OVER
BNSF RAILROAD
SECTION 01-00590-00-BR (COUNTY)
LASALLE COUNTY
STATION 21+75.75
STR. NO. 050-8023

HUTCHISON ENGINEERING, INC.
JACKSONVILLE & JOLIET, ILLINOIS
Date: 3 /10 /2006

ROUTE NO.	SEC	COUNTY	TOTAL SHEETS	SHEET NO.
FAU 6145	*	LASALLE	168	113
FED. ROAD DIST. NO. 3	ILLINOIS	PROJECT		

* 01-00590-00-BR (County)

SHEET NO. 33
41 SHEETS

CONTRACT NO. 87293

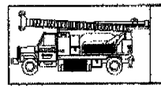

Midwest Testing Services, Inc.
3705 Progress Blvd.
Peru, IL 61354

BORING LOG

Sheet 2 of 2

Phone: 815-223-6696
Fax: 815-223-6659
E-Mail: Midwest @ TheRamp.net

Client: Hutchinson Engineering
Project Name: F.A.U. 6145 Section: 01-00590-00-BR
Project Site: Broadway Street Bridge Streator, IL
STATION 25+40, 25' RT.

Boring No. B-3
Surface Elev. 622.92
Auger Depth 41.00 Rotary Depth NA
Start Date 05/31/03 Finish Date 05/31/03

Location: See Location Map
Between Pier #7 & #8

DRILLED BY: Randy Safranski
Diedrich D-120

(DEPTH) ELEV.	DESCRIPTION OF MATERIALS	Graphic Log	Depth in feet	Sample No.	Sample Type	Qu (TSF)	N Value (Blows)	Bulge / Shear	Moisture (%)	Dry Density (PCF)	REMARKS
601.92											
600.92	Medium dense Brown fine-medium sand		22								
599.92			23	9	SS	---	16	---	19		
598.92			24								
597.92			25	10	SS	---	25	---	10		
596.92			26								
595.92			27								
594.92			28	11	SS	---	34	---	10		
593.92			29								
592.92			30	12	SS	---	34	---	9		
591.92	Dense Brown coarse gravel		31								
590.92			32								
589.92			33	13	SS	---	35	---	9		
588.92			34								
587.92			35								
586.92			36	14	SS	---	37	---	11		
585.92			37								
584.92			38	15	SS	---	45	---	10		
583.92			39								
582.92	Hard Gray shale		40	16	SS	---	100 6"	---	15		
581.92	Bottom of boring		41								

Groundwater Data: Water after auger removal 19' below top of ground.
Comments:

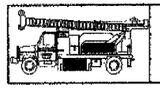

Midwest Testing Services, Inc.
3705 Progress Blvd.
Peru, IL 61354

BORING LOG

Sheet 1 of 3

Phone: 815-223-6696
Fax: 815-223-6659
E-Mail: Midwest @ TheRamp.net

Client: Hutchinson Engineering
Project Name: F.A.U. 6145 Section: 01-00590-00-BR
Project Site: Broadway Street Bridge Streator, IL
STATION 23+60, 20' LT.

Boring No. B-4
Surface Elev. 624.00
Auger Depth 46.00 Rotary Depth NA
Start Date 05/27/03 Finish Date 05/27/03

Location: See Location Map
Pier #6

DRILLED BY: Randy Safranski
Diedrich D-120

(DEPTH) *ELEV.	DESCRIPTION OF MATERIALS	Graphic Log	Depth in feet	Sample No.	Sample Type	Qu (TSF)	N Value (Blows)	Bulge / Shear	Moisture (%)	Dry Density (PCF)	REMARKS
624.00											
623.00	Loose-medium stiff Black cinders & brown silty clay fill		1								
622.00			2								
621.00			3	1	SS	---	7	---	19		
620.00			4								
619.00			5	2	SS	1.7	6	B	22		
618.00	Medium stiff-hard Brown gray silty clay		6								
617.00			7								
616.00			8	3	SS	4.8	21	B	18		
615.00			9								
614.00			10	4	SS	5.0	26	B	16		
613.00	Medium dense Gray fine sand		11								
612.00			12								
611.00	Medium stiff Gray silty clay till with sand seams		13	5	SS	4.2	19	B	17		
610.00			14								
609.00			15	6	SS	3.9	24	B/S	18		
608.00			16								
607.00			17								
606.00	Medium dense Brown gray fine-medium sand		18	7	SS	---	31	---	12		
605.00			19								
604.00			20	8	SS	---	23	---	14		

Water Table

Groundwater Data: Water after auger removal 10' below top of ground.
Comments:

DESIGNED	JOH
CHECKED	BRT
DRAWN	TC
CHECKED	JOH

/structure/2190b030

...\structure\2190b030.dgn 03/10/2006 02:35:31 PM

BORINGS
FAU ROUTE 6145 OVER
BNSF RAILROAD
SECTION 01-00590-00-BR (COUNTY)
LASALLE COUNTY
STATION 21+75.75
STR. NO. 050-8023

HUTCHISON ENGINEERING, INC.
JACKSONVILLE & JOLIET, ILLINOIS
Date: 3 /10 /2006

ROUTE NO.	SEC	COUNTY	TOTAL SHEETS	SHEET NO.
FAU 6145	*	LASALLE	168	114
FED. ROAD DIST. NO. 3	ILLINOIS	PROJECT		

SHEET NO. 34
41 SHEETS

* 01-00590-00-BR (County)

CONTRACT NO. 87293

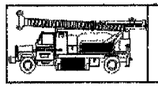

Midwest Testing Services, Inc.
3705 Progress Blvd.
Peru, IL 61354

BORING LOG
Sheet 2 of 3

Phone: 815-223-6696
Fax: 815-223-6659
E-Mail: Midwest @ TheRamp.net

Client: Hutchinson Engineering
Project Name: F.A.U. 6145 Section: 01-00590-00-BR
Project Site: Broadway Street Bridge Streator, IL
STATION 23+60, 20' LT.

Boring No. B-4
Surface Elev. 624.00
Auger Depth 46.00 Rotary Depth NA
Start Date 05/27/03 Finish Date 05/27/03

Location: See Location Map
Pier #6

DRILLED BY: Randy Safranski, Diedrich D-120

(DEPTH) ELEV.	DESCRIPTION OF MATERIALS	Graphic Log	Depth in feet	Sample No.	Sample Type	Qu (TSF)	N Value (Blows)	Bulge / Shear	Moisture (%)	Dry Density (PCF)	REMARKS
603.00											
602.00	Medium dense Brown gray fine-medium sand		22								
601.00			23	9	SS	---	22	---	16		
600.00			24								
599.00			25								
598.00			26	10	SS	---	22	---	20		
597.00			27								
596.00			28	11	SS	---	26	---	18		
595.00			29								
594.00			30								
593.00			31	12	SS	---	38	---	15		
592.00	Medium dense-dense Gray coarse sand & gravel		32								
591.00			33	13	SS	---	37	---	10		
590.00			34								
589.00			35								
588.00			36	14	SS	---	36	---	9		
587.00			37								
586.00			38	15	SS	---	38	---	11		
585.00			39								
584.00	Hard Gray sandy shale		40								
583.00			41	16	SS	---	55	---	16		

Groundwater Data: Water after auger removal 10' below top of ground.
Comments:

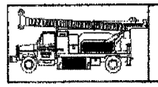

Midwest Testing Services, Inc.
3705 Progress Blvd.
Peru, IL 61354

BORING LOG
Sheet 3 of 3

Phone: 815-223-6696
Fax: 815-223-6659
E-Mail: Midwest @ TheRamp.net

Client: Hutchinson Engineering
Project Name: F.A.U. 6145 Section: 01-00590-00-BR
Project Site: Broadway Street Bridge Streator, IL
STATION 23+60, 20' LT.

Boring No. B-4
Surface Elev. 624.00
Auger Depth 46.00 Rotary Depth NA
Start Date 05/27/03 Finish Date 05/27/03

Location: See Location Map
Pier #6

DRILLED BY: Randy Safranski, Diedrich D-120

(DEPTH) ELEV.	DESCRIPTION OF MATERIALS	Graphic Log	Depth in feet	Sample No.	Sample Type	Qu (TSF)	N Value (Blows)	Bulge / Shear	Moisture (%)	Dry Density (PCF)	REMARKS
582.00											
581.00	Hard Gray sandy shale		43	17	SS	---	100/6"	---	12		
580.00			44								
579.00			45	18	SS	---	110/6"	---	10		
578.00	Bottom of boring		46								
577.00			47								
576.00			48								
575.00			49								
574.00			50								
573.00			51								
572.00			52								
571.00			53								
570.00			54								
569.00			55								
568.00			56								
567.00			57								
566.00			58								
565.00			59								
564.00			60								
563.00			61								
562.00			62								

Groundwater Data: Water after auger removal 10' below top of ground.
Comments:

DESIGNED	JOH
CHECKED	BRT
DRAWN	TC
CHECKED	JOH

/structure/2190b030

...\structure\2190b030.dgn 03/10/2006 02:39:36 PM

BORINGS
FAU ROUTE 6145 OVER
BNSF RAILROAD
SECTION 01-00590-00-BR (COUNTY)
LASALLE COUNTY
STATION 21+75.75
STR. NO. 050-8023

HUTCHISON ENGINEERING, INC.
JACKSONVILLE & JOLIET, ILLINOIS
Date: 3 /10 /2006

ROUTE NO.	SEC	COUNTY	TOTAL SHEETS	SHEET NO.
FAU 6145	*	LASALLE	168	115
FED. ROAD DIST. NO. 3	ILLINOIS	PROJECT		

* 01-00590-00-BR (County)

SHEET NO. 35
41 SHEETS

CONTRACT NO. 87293

Midwest Testing Services, Inc.
3705 Progress Blvd.
Peru, IL 61354
Phone: 815-223-6696
Fax: 815-223-6659
E-Mail: Midwest @ TheRamp.net

BORING LOG

Sheet 1 of 3

Client: Hutchinson Engineering
Project Name: F.A.U. 6145 Section: 01-00590-00-BR
Project Site: Broadway Street Bridge Streator, IL
STATION 22+45, 25' LT.

Location: See Location Map
Center Pier

Boring No. B-5
Surface Elev. 623.72
Auger Depth 51.00 Rotary Depth NA
Start Date 06/10/03 Finish Date 06/10/03

DRILLED BY: Randy Safranski, Diedrich D-120

(DEPTH) *ELEV.	DESCRIPTION OF MATERIALS	Graphic Log	Depth in feet	Sample No.	Sample Type	Qu (TSF)	N Value (Blows)	Bulge / Shear	Moisture (%)	Dry Density (PCF)	REMARKS
623.72											
622.72	Loose Black cinder fill		1								
621.72			2								
620.72			3	1	SS	---	9	---	12		
619.72	Stiff-very stiff Brown gray silty clay		4								
618.72			5	2	SS	3.1	11	B/S	17		
617.72			6								
616.72	Stiff-very stiff Brown gray silty clay		7								
615.72			8	3	SS	2.9	11	B	18		
614.72			9								
613.72			10								
612.72			11	4	SS	2.3	11	B/S	19		
611.72			12								
610.72	Stiff Gray silty clay till		13	5	SS	1.9	11	B	20		
609.72			14								
608.72			15	6	SS	2.1	14	B	20		
607.72			16								
606.72			17								
605.72			18	7	SS	---	13	---	17		
604.72	Medium dense Brown fine-medium sand		19								
603.72			20	8	SS	---	14	---	16		

Water Table

Groundwater Data: Water after auger removal 14' below top of ground.
Comments:

Midwest Testing Services, Inc.
3705 Progress Blvd.
Peru, IL 61354
Phone: 815-223-6696
Fax: 815-223-6659
E-Mail: Midwest @ TheRamp.net

BORING LOG

Sheet 2 of 3

Client: Hutchinson Engineering
Project Name: F.A.U. 6145 Section: 01-00590-00-BR
Project Site: Broadway Street Bridge Streator, IL
STATION 22+45, 25' LT.

Location: See Location Map
Center Pier

Boring No. B-5
Surface Elev. 623.72
Auger Depth 51.00 Rotary Depth NA
Start Date 06/10/03 Finish Date 06/10/03

DRILLED BY: Randy Safranski, Diedrich D-120

(DEPTH) ELEV.	DESCRIPTION OF MATERIALS	Graphic Log	Depth in feet	Sample No.	Sample Type	Qu (TSF)	N Value (Blows)	Bulge / Shear	Moisture (%)	Dry Density (PCF)	REMARKS
602.72											
601.72			22								
600.72	Medium dense Brown fine-medium sand		23	9	SS	---	15	---	15		
599.72			24								
598.72			25								
597.72			26	10	SS	---	16	---	16		
596.72			27								
595.72	Medium dense Gray fine-medium sand		28	11	SS	---	18	---	14		
594.72			29								
593.72			30								
592.72			31	12	SS	---	20	---	12		
591.72			32								
590.72	Medium dense Gray coarse sand and gravel		33	13	SS	---	29	---	9		
589.72			34								
588.72			35								
587.72			36	14	SS	---	27	---	11		
586.72			37								
585.72	Hard Gray sandy shale		38	15	SS	---	85/6"	---	13		
584.72			39								
583.72			40								
582.72			41	16	SS	---	95/6"	---	11		

Groundwater Data: Water after auger removal 14' below top of ground.
Comments:

DESIGNED	JOH
CHECKED	BRT
DRAWN	TC
CHECKED	JOH

/structure/2190b030

...\structure\2190b030.dgn 03/10/2006 02:35:45 PM

BORINGS
FAU ROUTE 6145 OVER
BNSF RAILROAD
SECTION 01-00590-00-BR (COUNTY)
LASALLE COUNTY
STATION 21+75.75
STR. NO. 050-8023

HUTCHISON ENGINEERING, INC.
JACKSONVILLE & JOLIET, ILLINOIS
Date: 3 /10 /2006

ROUTE NO.	SEC	COUNTY	TOTAL SHEETS	SHEET NO.
FAU 6145	*	LASALLE	168	116
FED. ROAD DIST. NO. 3	ILLINOIS	PROJECT		

* 01-00590-00-BR (County)

SHEET NO. 36
41 SHEETS

CONTRACT NO. 87293

Midwest Testing Services, Inc.
3705 Progress Blvd.
Peru, IL 61354
Phone: 815-223-6696
Fax: 815-223-6659
E-Mail: Midwest @ TheRamp.net

BORING LOG

Sheet 3 of 3

Client: Hutchinson Engineering
Project Name: F.A.U. 6145 Section: 01-00590-00-BR
Project Site: Broadway Street Bridge Streator, IL
STATION 22+45, 25' LT.

Boring No. B-5
Surface Elev. 623.72
Auger Depth 51.00 Rotary Depth NA
Start Date 06/10/03 Finish Date 06/10/03

Location: See Location Map
Center Pier

DRILLED BY: Randy Safranski
Diedrich D-120

(DEPTH) ELEV.	DESCRIPTION OF MATERIALS	Graphic Log	Depth in feet	Sample No.	Sample Type	Qu (TSF)	N Value (Blows)	Bulge / Shear	Moisture (%)	Dry Density (PCF)	REMARKS
581.72											
580.72	Hard Gray sandy shale		43	17	SS	---	100/6"	---	10		
579.72			44								
578.72			45	18	SS	---	100/6"	---	10		
577.72			46								
576.72			47								
575.72			48	19	SS	---	105/6"	---	10		
574.72			49								
573.72			50								
572.72	Bottom of boring		51	20	SS	---	105/6"	---	9		
571.72			52								
570.72			53								
569.72			54								
568.72			55								
567.72			56								
566.72			57								
565.72			58								
564.72			59								
563.72			60								
562.72			61								
561.72			62								

Groundwater Data: Water after auger removal 14' below top of ground.
Comments:

Midwest Testing Services, Inc.
3705 Progress Blvd.
Peru, IL 61354
Phone: 815-223-6696
Fax: 815-223-6659
E-Mail: Midwest @ TheRamp.net

BORING LOG

Sheet 1 of 2

Client: Hutchinson Engineering
Project Name: F.A.U. 6145 Section: 01-00590-00-BR
Project Site: Broadway Street Bridge Streator, IL
STATION 20+95, 30' RT.

Boring No. B-6
Surface Elev. 622.95
Auger Depth 41.00 Rotary Depth NA
Start Date 06/10/03 Finish Date 06/10/03

Location: See Location Map
Pier #4

DRILLED BY: Randy Safranski
Diedrich D-120

(DEPTH) *ELEV.	DESCRIPTION OF MATERIALS	Graphic Log	Depth in feet	Sample No.	Sample Type	Qu (TSF)	N Value (Blows)	Bulge / Shear	Moisture (%)	Dry Density (PCF)	REMARKS
622.95											
621.95	Loose Black cinder and rubble fill		1								
620.95			2								
619.95			3	1	SS	---	9	---	14		
618.95	Stiff Brown gray silty clay		4								
617.95			5	2	SS	1.6	12	B	19		
616.95			6								
615.95			7								
614.95			8	3	SS	---	10	---	10		
613.95	Medium dense Brown fine sand		9								
612.95			10	4	SS	---	11	---	9		
611.95			11								
610.95			12								
609.95			13	5	SS	---	13	---	8		
608.95			14								
607.95	Medium dense Brown medium sand		15								
606.95			16	6	SS	---	22	---	8		
605.95			17								
604.95			18	7	SS	---	12	---	14		Water Table
603.95	Medium dense Brown fine sand		19								
602.95			20	8	SS	---	11	---	16		

Groundwater Data: Water after auger removal 18' below top of ground.
Comments:

DESIGNED	JOH
CHECKED	BRT
DRAWN	TC
CHECKED	JOH

/structure/2190b030

BORINGS
FAU ROUTE 6145 OVER
BNSF RAILROAD
SECTION 01-00590-00-BR (COUNTY)
LASALLE COUNTY
STATION 21+75.75
STR. NO. 050-8023

HUTCHISON ENGINEERING, INC.
JACKSONVILLE & JOLIET, ILLINOIS
Date: 3 /10 /2006

...\structure\2190b030.dgn 03/10/2006 02:35:52 PM

ROUTE NO.	SEC.	COUNTY	TOTAL SHEETS	SHEET NO.
FAU 6145	*	LASALLE	168	117
FED. ROAD DIST. NO. 3	ILLINOIS	PROJECT		

* 01-00590-00-BR (County)

SHEET NO. 37
41 SHEETS

CONTRACT NO. 87293

Midwest Testing Services, Inc.
3705 Progress Blvd.
Peru, IL 61354

Phone: 815-223-6696
Fax: 815-223-6659
E-Mail: Midwest @ TheRamp.net

BORING LOG

Sheet 2 of 2

Client: Hutchinson Engineering
Project Name: F.A.U. 6145 Section: 01-00590-00-BR
Project Site: Broadway Street Bridge Streator, IL
STATION 20+95, 30' RT.

Boring No. B-6
Surface Elev. 622.95
Auger Depth 41.00 Rotary Depth NA
Start Date 06/10/03 Finish Date 06/10/03

Location: See Location Map
Pier #4

DRILLED BY: Randy Safranski, Diedrich D-120

(DEPTH) ELEV. 601.95	DESCRIPTION OF MATERIALS	Graphic Log	Depth in feet	Sample No.	Sample Type	Qu (TSF)	N Value (Blows)	Bulge / Shear	Moisture (%)	Dry Density (PCF)	REMARKS
600.95	Loose-medium dense Brown fine sand		22								
599.95			23	9	SS	---	10	---	16		
598.95	Loose Gray silt		24								
597.95			25								
596.95			26	10	SS	---	9	---	24		
595.95			27								
594.95			28	11	SS	1.6	9	B/S	26		
593.95	Stiff Gray silty loam till		29								
592.95			30	12	SS	1.4	8	B/S	24		
591.95			31								
590.95			32								
589.95			33	13	SS	1.4	10	B/S	24		
588.95			34								
587.95	Hard Gray sandy weathered shale		35	14	SS	---	100	---	17		
586.95			36								
585.95			37								
584.95			38	15	SS	---	100/6"	---	14		
583.95	Hard Gray blue shale		39								
582.95			40								
581.95	Bottom of boring		41	16	SS	---	100/6"	---	12		

Groundwater Data: Water after auger removal 18' below top of ground.
Comments:

Midwest Testing Services, Inc.
3705 Progress Blvd.
Peru, IL 61354

Phone: 815-223-6696
Fax: 815-223-6659
E-Mail: Midwest @ TheRamp.net

BORING LOG

Sheet 1 of 2

Client: Hutchinson Engineering
Project Name: F.A.U. 6145 Section: 01-00590-00-BR
Project Site: Broadway Street Bridge Streator, IL
STATION 19+80, 20' LT.

Boring No. B-7
Surface Elev. 622.63
Auger Depth 41.00 Rotary Depth NA
Start Date 05/31/03 Finish Date 05/31/03

Location: See Location Map
Pier #3

DRILLED BY: Randy Safranski, Diedrich D-120

(DEPTH) *ELEV. 622.63	DESCRIPTION OF MATERIALS	Graphic Log	Depth in feet	Sample No.	Sample Type	Qu (TSF)	N Value (Blows)	Bulge / Shear	Moisture (%)	Dry Density (PCF)	REMARKS
621.63	Stiff Black silty clay		1								
620.63			2								
619.63			3	1	SS	1.9	6	B/S	25		
618.63	Stiff-very stiff Gray brown silty clay		4								
617.63			5								
616.63			6	2	SS	2.3	7	B	19		
615.63			7								
614.63			8	3	SS	---	10	---	9		
613.63	Loose Brown fine sand		9								
612.63			10	4	SS	---	7	---	10		
611.63			11								
610.63			12								
609.63			13	5	SS	---	10	---	10		
608.63			14								
607.63			15	6	SS	---	19	---	12		
606.63	Medium dense Brown medium sand		16								
605.63			17								
604.63			18	7	SS	---	18	---	14		
603.63	Medium dense Brown-gray gravel & coal fragments		19								
602.63			20	8	SS	---	24	---	11		

Water Table

Groundwater Data: Water after auger removal 15' below top of ground.
Comments:

DESIGNED	JOH
CHECKED	BRT
DRAWN	TC
CHECKED	JOH

/structure/2190b030

...\structure\2190b030.dgn 03/10/2006 02:36:00 PM

BORINGS
FAU ROUTE 6145 OVER
BNSF RAILROAD
SECTION 01-00590-00-BR (COUNTY)
LASALLE COUNTY
STATION 21+75.75
STR. NO. 050-8023

HUTCHISON ENGINEERING, INC.
JACKSONVILLE & JOLIET, ILLINOIS
Date: 3 /10 /2006

ROUTE NO.	SEC	COUNTY	TOTAL SHEETS	SHEET NO.
FAU 6145	*	LASALLE	168	118
FED. ROAD DIST. NO. 3	ILLINOIS	PROJECT		

* 01-00590-00-BR (County)

SHEET NO. 38
41 SHEETS

CONTRACT NO. 87293

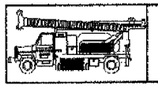

Midwest Testing Services, Inc.
3705 Progress Blvd.
Peru, IL 61354

Phone: 815-223-6696
Fax: 815-223-6659
E-Mail: Midwest @ TheRamp.net

BORING LOG

Sheet 2 of 2

Client: Hutchinson Engineering
Project Name: F.A.U. 6145 Section: 01-00590-00-BR
Project Site: Broadway Street Bridge Streator, IL
STATION 19+80, 20' LT.

Boring No. B-7
Surface Elev. 622.63
Auger Depth 41.00 Rotary Depth NA
Start Date 05/31/03 Finish Date 05/31/03

Location: See Location Map
Pier #3

DRILLED BY: Randy Saftanski, Diedrich D-120

(DEPTH) ELEV.	DESCRIPTION OF MATERIALS	Graphic Log	Depth in feet	Sample No.	Sample Type	Qu (TSF)	N Value (Blows)	Bulge / Shear	Moisture (%)	Dry Density (PCF)	REMARKS
601.63			22								
600.63			23	9	SS	6.0	28	B/S	14		
599.63	Stiff-very stiff Gray silty clay till		24								
598.63			25	10	SS	4.5	18	B	16		
597.63			26								
596.63			27								
595.63			28	11	SS	2.1	12	B	19		
594.63			29								
593.63			30								
592.63			31	12	SS	2.3	15	B	17		
591.63			32								
590.63			33	13	SS	---	64	---	10		
589.63	Very dense gray gravel		34								
588.63			35	14	SS	---	75/6"	---	16		
587.63			36								
586.63			37								
585.63			38	15	SS	---	80/6"	---	15		
584.63	Hard Gray sandy shale		39								
583.63			40								
582.63			41	16	SS	---	91/6"	---	14		
581.63	Bottom of boring										

Groundwater Data: Water after auger removal 15' below top of ground.
Comments:

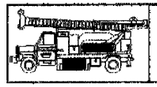

Midwest Testing Services, Inc.
3705 Progress Blvd.
Peru, IL 61354

Phone: 815-223-6696
Fax: 815-223-6659
E-Mail: Midwest @ TheRamp.net

BORING LOG

Sheet 1 of 3

Client: Hutchinson Engineering
Project Name: F.A.U. 6145 Section: 01-00590-00-BR
Project Site: Broadway Street Bridge Streator, IL
STATION 19+25, 20' RT.

Boring No. B-8
Surface Elev. 623.09
Auger Depth 46.00 Rotary Depth NA
Start Date 05/31/03 Finish Date 05/31/03

Location: See Location Map
Pier #2

DRILLED BY: Randy Saftanski, Diedrich D-120

(DEPTH) *ELEV.	DESCRIPTION OF MATERIALS	Graphic Log	Depth in feet	Sample No.	Sample Type	Qu (TSF)	N Value (Blows)	Bulge / Shear	Moisture (%)	Dry Density (PCF)	REMARKS
623.09			1								
622.09	Medium stiff Black silty clay		2								
621.09			3	1	SS	---	5	---	23		
620.09			4								
619.09	Stiff Brown-gray silt & silty clay loam		5	2	SS	---	9	---	18		
618.09			6								
617.09			7								
616.09	Medium stiff Brown-gray silt & brown clayey sand		8	3	SS	---	6	---	20		
615.09			9								
614.09	Loose-medium stiff Brown fine sand & brown sandy clay loam till		10	4	SS	---	6	---	19		
613.09			11								
612.09			12								
611.09	Medium dense Gray fine-coarse gravel		13	5	SS	---	21	---	9		
610.09			14								
609.09			15								
608.09			16	6	SS	---	23	---	8		
607.09			17								
606.09	Medium dense Brown fine sand		18	7	SS	---	24	---	8		
605.09			19								
604.09			20								
603.09	Stiff-very stiff Gray silty clay till			8	SS	2.7	13	B	17		

Groundwater Data: Water after auger removal 23' below top of ground.
Comments:

DESIGNED	JOH
CHECKED	BRT
DRAWN	TC
CHECKED	JOH

/structure/2190b030

...\structure\2190b030.dgn 03/10/2006 02:30:05 PM

BORINGS
FAU ROUTE 6145 OVER
BNSF RAILROAD
SECTION 01-00590-00-BR (COUNTY)
LASALLE COUNTY
STATION 21+75.75
STR. NO. 050-8023

HUTCHISON ENGINEERING, INC.
JACKSONVILLE & JOLIET, ILLINOIS
Date: 3 /10 /2006

ROUTE NO.	SEC	COUNTY	TOTAL SHEETS	SHEET NO.
FAU 6145	*	LASALLE	168	119
FED. ROAD DIST. NO. 3	ILLINOIS	PROJECT		

* 01-00590-00-BR (County)

SHEET NO. 39
41 SHEETS

CONTRACT NO. 87293

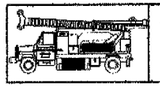

Midwest Testing Services, Inc.
3705 Progress Blvd.
Peru, IL 61354

Phone: 815-223-6696
Fax: 815-223-6659
E-Mail: Midwest @ TheRamp.net

BORING LOG

Sheet 2 of 3

Client: Hutchinson Engineering
Project Name: F.A.U. 6145 Section: 01-00590-00-BR
Project Site: Broadway Street Bridge Streator, IL
STATION 19+25, 20' RT.

Location: See Location Map
Pier #2

Boring No. B-8
Surface Elev. 623.09
Auger Depth 46.00 Rotary Depth NA
Start Date 05/31/03 Finish Date 05/31/03

DRILLED BY: Randy Safranski
Diedrich D-120

(DEPTH) ELEV.	DESCRIPTION OF MATERIALS	Graphic Log	Depth in feet	Sample No.	Sample Type	Qu (TSF)	N Value (Blows)	Bulge / Shear	Moisture (%)	Dry Density (PCF)	REMARKS
602.09											
601.09			22								
600.09			23	9	SS	2.7	13	B	18		Water Table
599.09	Stiff-very stiff Gray Silty clay loam till		24								
598.09			25	10	SS	2.8	14	B	19		
597.09			26								
596.09			27								
595.09			28	11	SS	3.4	17	B	17		
594.09			29								
593.09			30	12	SS	2.6	14	B	25		
592.09	Medium dense Gray silt		31								
591.09			32								
590.09			33	13	SS	---	18	---	24		
589.09			34								
588.09			35	14	SS	---	122	---	17		
587.09			36								
586.09			37								
585.09	Hard Gray sandy shale		38	15	SS	---	115/6"	---	14		
584.09			39								
583.09			40								
582.09			41	16	SS	---	125/6"	---	10		

Groundwater Data: Water after auger removal 23' below top of ground.
Comments:

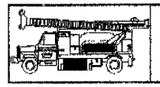

Midwest Testing Services, Inc.
3705 Progress Blvd.
Peru, IL 61354

Phone: 815-223-6696
Fax: 815-223-6659
E-Mail: Midwest @ TheRamp.net

BORING LOG

Sheet 3 of 3

Client: Hutchinson Engineering
Project Name: F.A.U. 6145 Section: 01-00590-00-BR
Project Site: Broadway Street Bridge Streator, IL
STATION 19+25, 20' RT.

Location: See Location Map
Pier #2

Boring No. B-8
Surface Elev. 623.09
Auger Depth 46.00 Rotary Depth NA
Start Date 05/31/03 Finish Date 05/31/03

DRILLED BY: Randy Safranski
Diedrich D-120

(DEPTH) ELEV.	DESCRIPTION OF MATERIALS	Graphic Log	Depth in feet	Sample No.	Sample Type	Qu (TSF)	N Value (Blows)	Bulge / Shear	Moisture (%)	Dry Density (PCF)	REMARKS
581.09											
580.09	Hard Gray sandy shale		43	17	SS	---	110/6"	---	9		
579.09			44								
578.09			45								
577.09	Bottom of boring		46	18	SS	---	120/6"	---	9		
576.09			47								
575.09			48								
574.09			49								
573.09			50								
572.09			51								
571.09			52								
570.09			53								
569.09			54								
568.09			55								
567.09			56								
566.09			57								
565.09			58								
564.09			59								
563.09			60								
562.09			61								
561.09			62								

Groundwater Data: Water after auger removal 23' below top of ground.
Comments:

DESIGNED	JOH
CHECKED	BRT
DRAWN	TC
CHECKED	JOH

/structure/2130b030

BORINGS
FAU ROUTE 6145 OVER
BNSF RAILROAD
SECTION 01-00590-00-BR (COUNTY)
LASALLE COUNTY
STATION 21+75.75
STR. NO. 050-8023

HUTCHISON ENGINEERING, INC.
JACKSONVILLE & JOLIET, ILLINOIS
Date: 3 /10 /2006

...\structure\2130b030.dgn 03/10/2006 02:36:12 PM

ROUTE NO.	SEC	COUNTY	TOTAL SHEETS	SHEET NO.
FAU 6145	*	LASALLE	168	120
FED. ROAD DIST. NO. 3	ILLINOIS	PROJECT		

* 01-00590-00-BR (County)

SHEET NO. 40
41 SHEETS

CONTRACT NO. 87293

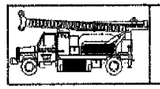

Midwest Testing Services, Inc.
3705 Progress Blvd.
Peru, IL 61354

Phone: 815-223-6696
Fax: 815-223-6659
E-Mail: Midwest @ TheRamp.net

BORING LOG

Sheet 1 of 2

Client: Hutchinson Engineering
Project Name: F.A.U. 6145 Section: 01-00590-00-BR
Project Site: Broadway Street Bridge Streator, IL
STATION 18+35, 20' LT.

Boring No. B-9
Surface Elev. 624.05
Auger Depth 41.00 Rotary Depth NA
Start Date 05/31/03 Finish Date 05/31/03

Location: See Location Map
Between Pier #1 & West Abutment

DRILLED BY: Randy Safranski
Diedrich D-120

(DEPTH) *ELEV.	DESCRIPTION OF MATERIALS	Graphic Log	Depth in feet	Sample No.	Sample Type	Qu (TSF)	N Value (Blows)	Bulge / Shear	Moisture (%)	Dry Density (PCF)	REMARKS
624.05											
623.05	Stiff-medium stiff Black silty clay		1								
622.05			2								
621.05			3	1	SS	1.0	4	B	26		
620.05	Stiff Brown-gray silty clay		4								
619.05			5	2	SS	1.6	8	B	22		
618.05			6								
617.05			7								
616.05	Very stiff-hard Brown-gray silty clay till with sand layers		8	3	SS	3.9	8	S	17		
615.05			9								
614.05			10								
613.05			11	4	SS	4.3	17	B/S	15		
612.05	Medium dense Brown-gray coarse-medium sand		12								
611.05			13	5	SS	---	20	---	9		
610.05			14								
609.05	Medium dense Brown fine sand		15								
608.05			16	6	SS	---	21	---	8		
607.05			17								
606.05			18	7	SS	---	15	---	12		Water Table
605.05	Medium dense Gray silt		19								
604.05			20								
	Stiff gray silty clay till			8	SS	1.6	9	B	18		

Groundwater Data: Water after auger removal 17' below top of ground.
Comments:

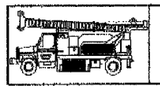

Midwest Testing Services, Inc.
3705 Progress Blvd.
Peru, IL 61354

Phone: 815-223-6696
Fax: 815-223-6659
E-Mail: Midwest @ TheRamp.net

BORING LOG

Sheet 2 of 2

Client: Hutchinson Engineering
Project Name: F.A.U. 6145 Section: 01-00590-00-BR
Project Site: Broadway Street Bridge Streator, IL
STATION 18+35, 20' LT.

Boring No. B-9
Surface Elev. 624.05
Auger Depth 41.00 Rotary Depth NA
Start Date 05/31/03 Finish Date 05/31/03

Location: See Location Map
Between Pier #1 & West Abutment

DRILLED BY: Randy Safranski
Diedrich D-120

(DEPTH) ELEV.	DESCRIPTION OF MATERIALS	Graphic Log	Depth in feet	Sample No.	Sample Type	Qu (TSF)	N Value (Blows)	Bulge / Shear	Moisture (%)	Dry Density (PCF)	REMARKS
603.05											
602.05			22								
601.05			23	9	SS	2.7	13	B/S	18		
600.05			24								
599.05			25	10	SS	3.3	30	S	14		
598.05			26								
597.05			27								
596.05	Very stiff Gray silty clay till		28	11	SS	3.3	20	S	15		
595.05			29								
594.05			30								
593.05			31	12	SS	3.3	15	S	14		
592.05			32								
591.05			33	13	SS	3.3	17	S	15		
590.05			34								
589.05			35								
588.05			36	14	SS	3.5	18	B	17		
587.05			37								
586.05	Hard Gray sandy shale		38	15	SS	---	80/6"	---	16		
585.05			39								
584.05			40								
583.05			41	16	SS	---	89/6"	---	14		
	Bottom of boring										

Groundwater Data: Water after auger removal 17' below top of ground.
Comments:

DESIGNED	JOH
CHECKED	BRT
DRAWN	TC
CHECKED	JOH

/structure/2190b030

...\structure\2190b030.dgn 03/10/2006 02:36:20 PM

BORINGS
FAU ROUTE 6145 OVER
BNSF RAILROAD
SECTION 01-00590-00-BR (COUNTY)
LASALLE COUNTY
STATION 21+75.75
STR. NO. 050-8023

HUTCHISON ENGINEERING, INC.
JACKSONVILLE & JOLIET, ILLINOIS
Date: 3 /10 /2006

ROUTE NO.	SEC	COUNTY	TOTAL SHEETS	SHEET NO.
FAU 6145	*	LASALLE	168	121
FED. ROAD DIST. NO. 3	ILLINOIS	PROJECT		

* 01-00590-00-BR (County)

SHEET NO. 41
41 SHEETS

CONTRACT NO. 87293

Midwest Testing Services, Inc.
3705 Progress Blvd.
Peru, IL 61354
Phone: 815-223-6696
Fax: 815-223-6659
E-Mail: Midwest @ TheRamp.net

BORING LOG

Sheet 1 of 2

Client: Hutchinson Engineering
Project Name: F.A.U. 6145 Section: 01-00590-00-BR
Project Site: Broadway Street Bridge Streator, IL
STATION 17+45, 20' RT.

Boring No. B-10
Surface Elev. 625.91
Auger Depth 26.00 Rotary Depth NA
Start Date 05/31/03 Finish Date 05/31/03

Location: See Location Map
West Abutment

DRILLED BY: Randy Safranski
Diedrich D-120

(DEPTH) *ELEV.	DESCRIPTION OF MATERIALS	Graphic Log	Depth in feet	Sample No.	Sample Type	Qu (TSF)	N Value (Blows)	Bulge / Shear	Moisture (%)	Dry Density (PCF)	REMARKS
625.91											
624.91	Medium stiff Black silty clay		1								
623.91			2								
622.91			3	1	SS	1.6	4	B/S	20		
621.91	Medium stiff Brown silty clay		4								
620.91			5	2	SS	---	4	---	12		
619.91	Very loose brown fine sand		6								
618.91			7	3	SS	---	6	---	14		
617.91			8								
616.91			9								
615.91			10	4	SS	---	11	---	10		
614.91	Loose-medium dense Brown fine sand & gravel		11								
613.91			12								
612.91			13	5	SS	---	11	---	12		
611.91			14								
610.91			15								
609.91			16	6	SS	---	17	---	11		
608.91			17								
607.91			18	7	SS	---	20	---	10		Water Table
606.91	Medium dense Gray silt		19								
605.91			20	8	SS	---	16	---	21		

Groundwater Data: Water after auger removal 18' below top of ground.
Comments:

Midwest Testing Services, Inc.
3705 Progress Blvd.
Peru, IL 61354
Phone: 815-223-6696
Fax: 815-223-6659
E-Mail: Midwest @ TheRamp.net

BORING LOG

Sheet 2 of 2

Client: Hutchinson Engineering
Project Name: F.A.U. 6145 Section: 01-00590-00-BR
Project Site: Broadway Street Bridge Streator, IL
STATION 17+45, 20' RT.

Boring No. B-10
Surface Elev. 625.91
Auger Depth 26.00 Rotary Depth NA
Start Date 05/31/03 Finish Date 05/31/03

Location: See Location Map
West Abutment

DRILLED BY: Randy Safranski
Diedrich D-120

(DEPTH) ELEV.	DESCRIPTION OF MATERIALS	Graphic Log	Depth in feet	Sample No.	Sample Type	Qu (TSF)	N Value (Blows)	Bulge / Shear	Moisture (%)	Dry Density (PCF)	REMARKS
604.91											
603.91	Stiff-very stiff Gray silty clay till		22								
602.91			23	9	SS	2.1	12	B	15		
601.91			24								
600.91			25	10	SS	2.2	12	B	14		
599.91	Bottom of boring		26								
598.91			27								
597.91			28								
596.91			29								
595.91			30								
594.91			31								
593.91			32								
592.91			33								
591.91			34								
590.91			35								
589.91			36								
588.91			37								
587.91			38								
586.91			39								
585.91			40								
584.91			41								

Groundwater Data: Water after auger removal 18' below top of ground.
Comments:

DESIGNED	JOH
CHECKED	BRT
DRAWN	TC
CHECKED	JOH

/structure/2190b030

...\structure\2190b030.dgn 03/10/2006 02:36:25 PM

BORINGS
FAU ROUTE 6145 OVER
BNSF RAILROAD
SECTION 01-00590-00-BR (COUNTY)
LASALLE COUNTY
STATION 21+75.75
STR. NO. 050-8023

HUTCHISON ENGINEERING, INC.
JACKSONVILLE & JOLIET, ILLINOIS
Date: 3 /10 /2006

B.M. #115: Railroad Spike in Power Pole at Northwest Quadrant of Shabbona St. and Broadway St.
Elevation Taken From Streator BM's 3/1989, 23.41' Lt., Sta. 16+01.55, Elev. 628.51

B.M. #116: Railroad Spike in Power Pole at Northwest Quadrant of Iowa St. and Broadway St.
Elevation Taken From Streator BM's 3/1989, 39.84' Lt., Sta. 27+53.58, Elev. 627.48

F.A.U. RTE.	SECTION	COUNTY	TOTAL SHEETS	SHEET NO.
6145	*	LASALLE	168	122
FED. ROAD DIST. NO. 3	ILLINOIS	FED. AID PROJECT		

SHEET NO. 1
23 SHEETS

* 01-00590-00-BR (County)

CONTRACT NO. 87293

EXISTING STRUCTURE:

SN 050-8016, The existing bridge was built in 1930 and reconstructed in 1976. The structure consists of 20 spans, 843' back to back abutments with 22'-6' min. roadway width and one 5'-9' sidewalk. Approaches to the bridge consist of concrete retaining walls 119' long on the West and 112' on the East.

Existing Bridge and retaining wall to be Removed. Traffic will be Detoured.

No Salvage.

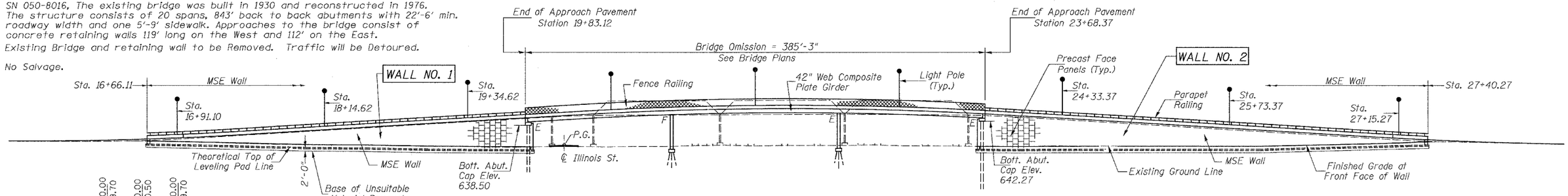

ELEVATION

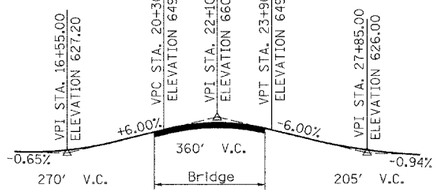

PROPOSED PROFILE GRADE BROADWAY ST.

CURVE DATA ILLINOIS ST.

P.I. Sta. = 90+00.00
Δ = 4° 47' 31" (Lt)
D = 2° 53' 27"
R = 1,981.98'
T = 82.93'
L = 165.76'
E = 1.73'
P.C. Sta. = 89+17.07
P.T. Sta. = 90+82.83
S.E. = Normal Crown

For General Notes and Total Bill of Material, See Sheet No. 2 of 23

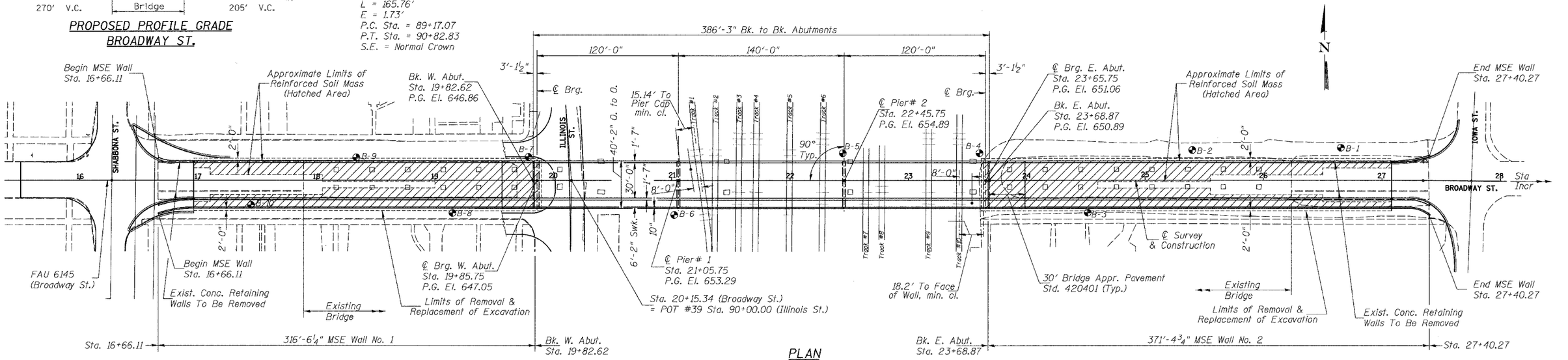

PLAN

Mile Post 89.41

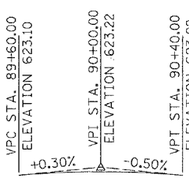

PROPOSED PROFILE GRADE ILLINOIS ST.

DESIGNED	JOH
CHECKED	BRT
DRAWN	TC & TD
CHECKED	JOH

DESIGN STRESSES

(FIELD UNITS)

f'c = 3,500 p.s.i.
fy = 60,000 p.s.i. (Reinforcement)
f'c = 4,500 p.s.i. (Precast Panels)

DESIGN SPECIFICATIONS

2002 AASHTO

LOADING HS20-44

Allow 50#/sq. ft. future wearing surface.
Equivalent Fluid Lateral Soil Pressure = 40 pcf
Live Load Traffic Surcharge = 0.240 ksf

JAMES O. HAMILTON
081-003668
LICENSED STRUCTURAL ENGINEER
OF
JACKSONVILLE
ILLINOIS
James O. Hamilton
3/10/2006
License Expires 11/30/2006

I certify that to the best of my knowledge, information and belief, this retaining wall design is structurally adequate for the design loading shown on the plans. The design is an economical one for the style of structure and complies with requirements of the current AASHTO Standard Specification for Highway Bridges.
This design complies with all requirements of the current AASHTO Guide Specifications for Seismic Design of highway bridges.

James O. Hamilton
Illinois Structural No. 3668
Expires 11/30/2006

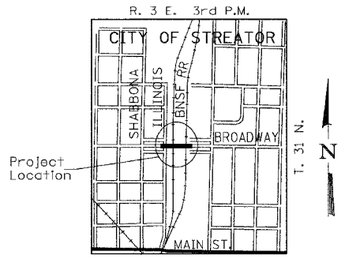

LOCATION SKETCH

GENERAL PLAN
MSE WALL NO. 1 & 2
FAU ROUTE 6145
SECTION 01-00590-00-BR (COUNTY)
LASALLE COUNTY
STATION 16+66.11 TO 27+40.27

HUTCHISON ENGINEERING, INC.
JACKSONVILLE & JOLIET, ILLINOIS

Date: 3 /10 /2006

2190b001F

ROUTE NO.	SEC	COUNTY	TOTAL SHEETS	SHEET NO.
FAU 6145	*	LASALLE	168	123
FED. ROAD DIST. NO. 3	ILLINOIS	PROJECT		

SHEET NO. 2
23 SHEETS

* 01-00590-00-BR (County)

CONTRACT NO. 87293

GENERAL NOTES

See Special Provisions for Mechanically Stabilized Earth Retaining Wall design and construction requirements.

Reinforcement bars shall conform to the requirements of AASHTO M31 or M322, Grade 60.

The limits and quantities of removal and replacement shown are based on the boring data and may be modified by the Engineer for variable subsurface conditions encountered in the field.

The gradations and capping of the Porous Granular Material used to replace the unsuitable material shall be approved by the Engineer.

The cost of the cast-in-place concrete coping, reinforcement bars and dowel bars will be included with the bid pay item "Mechanically Stabilized Earth Wall." The Contractor may substitute a precast coping, the details of which must be included in the shop plans and approved by the Engineer.

Conduits and electrical details shown in the Retaining Wall Plans are for location and installation purposes only. Refer to Electrical and Lighting Plan for details, pay items and quantities.

For borings, See Sheet No. 30 thru 41 of 41 of the bridge plans.

MECHANICALLY STABILIZED EARTH WALL BILL OF MATERIAL

	ITEM	UNIT	TOTAL WALL NO. 1	TOTAL WALL NO. 2	TOTALS
*	Mechanically Stabilized Earth Retaining Wall	Sq. Ft.	10,560	14,120	24,680
	Structure Excavation	Cu. Yd.	972	1,309	2,281
	Removal and Disposal of Unsuitable Material	Cu. Yd.	590	799	1,389
**	Concrete Structures	Cu. Yd.	243.2	288.2	531.4
	Reinforcement Bars Epoxy Coated	Pound	48,900	62,990	111,890
***	Concrete Superstructure	Cu. Yd.	142.1	170.8	312.9
	Protective Coat	Sq. Yd.	821	963	1,784
	Parapet Railing	Ft.	629	738	1,367
	French Drains	Cu. Yd.	23.5	27.5	51.0

All select granular material and porous granular embankment between the walls are included with the cost of Mechanically Stabilized Earth Retaining Wall. The estimated total quantity is 14,035 CY.

* This pay item shall include the cost of Rustication Finish.

** Includes shoulder concrete.

*** Includes all parapet and sidewalk concrete.

INDEX OF SHEETS
RETAINING WALLS NO. 1 & NO. 2

Sheet No.	Description
1	General Plan and Elevation
2	General Notes, Bill of Material, Index
3-4	Wall Layout and Elevation View
5	Abutment and Wall Details
6	Typical Section, Elevation
7	Shoulder and Pavement Plan
8	Joint Details
9	Wall 1 Shoulder
10	Wall 2 Shoulder
11	End of Wall Layout
12	Parapet and Shoulder Details
13	Bar List and Bar Details
14	Sidewalk Profiles
15-20	Parapet and Rail Elevations
21	Parapet Railing Spacing
22	Light Pole Mount Details
23	Shoulder Slab & Parapet Details

FOR INFORMATION ONLY (ESTIMATED QUANTITIES)

ITEM	UNIT	WALL NO. 1	WALL NO. 2	TOTALS
Reinforced Soil Mass (Select Fill)	Cu. Yd.	3,835	6,183	10,018
Porous Granular Embankment	Cu. Yd.	1,883	2,135	4,018
Porous Granular Embankment (Replace Unsuitable Material)	Cu. Yd.	590	799	1,389
			TOTAL	15,425 CU. YD.

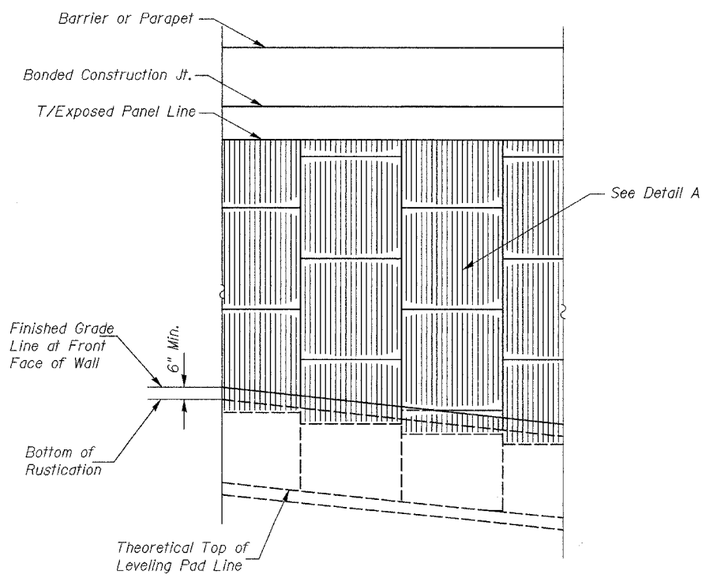

ELEVATION
TYPICAL ARCHITECTURAL FINISH

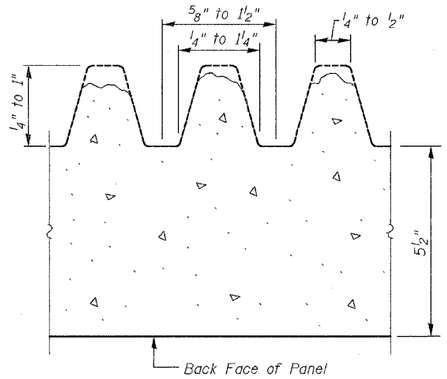

DETAIL A
PRECAST MSE PANEL
FRACTURED FIN DETAIL

NOTE: Fractured Fin Rustications shall be placed on Precast Mechanically Stabilized Earth Retaining Wall panels as shown in Detail A. Fractured Fin Rustication is included in the cost of Mechanically Stabilized Earth Retaining Wall. The Contractor shall submit 1.5 Sq. Ft. sample for Engineer's approval.

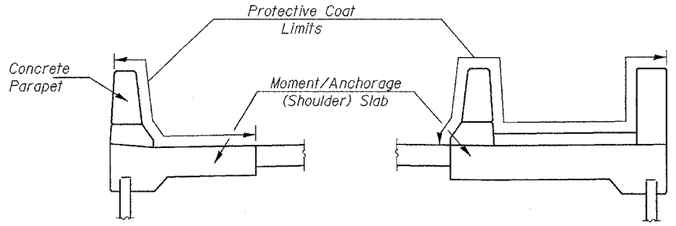

PROTECTIVE COAT LIMITS

DESIGNED	JOH
CHECKED	BRT
DRAWN	TD
CHECKED	JOH

GENERAL NOTES, BILL OF MATERIAL AND INDEX OF SHEETS
MSE WALL NO. 1 & 2
FAU ROUTE 6145
SECTION 01-00590-00-BR (COUNTY)
LASALLE COUNTY
STATION 16+66.11 TO 27+40.27

HUTCHISON ENGINEERING, INC.
JACKSONVILLE & JOLIET, ILLINOIS
Date: 3 /10 /2006

2190b002r

ROUTE NO.	SEC	COUNTY	TOTAL SHEETS	SHEET NO.
FAU 6145	*	LASALLE	168	124
FED. ROAD DIST. NO. 3	ILLINOIS	PROJECT		

SHEET NO. 3
23 SHEETS

* 01-00590-00-BR (County)

CONTRACT NO. 87293

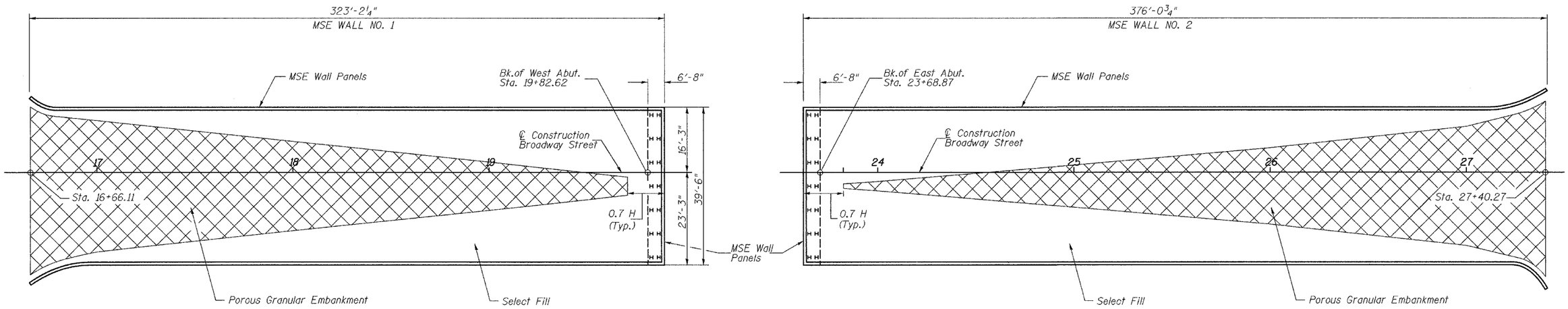

WALL NO. 1

WALL NO. 2

PLAN - MSE WALLS

(Not to Scale)

N

DESIGNED	JOH
CHECKED	BRT
DRAWN	TD
CHECKED	JOH

2190b03r

MECHANICALLY STABILIZED EARTH
RETAINING WALLS
GENERAL LAYOUT
FAU ROUTE 6145
SECTION 01-00590-00-BR (COUNTY)
LASALLE COUNTY
STATION 16+66.11 TO 27+40.27

HUTCHISON ENGINEERING, INC.
JACKSONVILLE & JOLIET, ILLINOIS
Date: 3 /10 /2006

F.A.U. RTE.	SECTION	COUNTY	TOTAL SHEETS	SHEET NO.
6145	*	LASALLE	168	125
FED. ROAD DIST. NO. 3	ILLINOIS	FED. AID PROJECT		

SHEET NO. 4
23 SHEETS

* 01-00590-00-BR (County)

CONTRACT NO. 87293

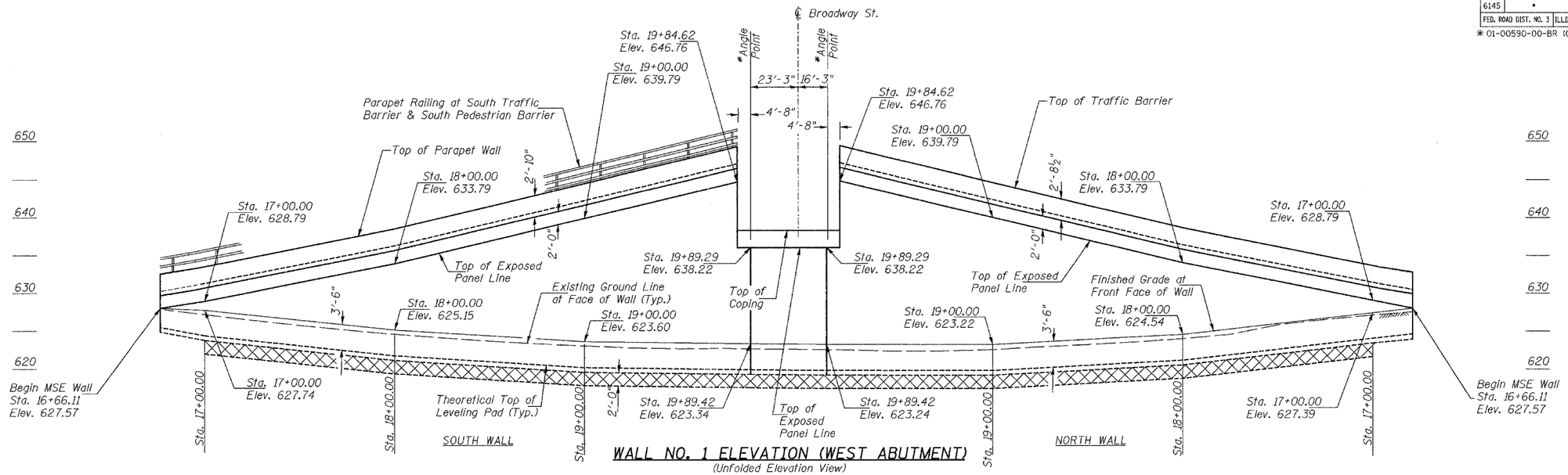

WALL NO. 1 ELEVATION (WEST ABUTMENT)

(Unfolded Elevation View)

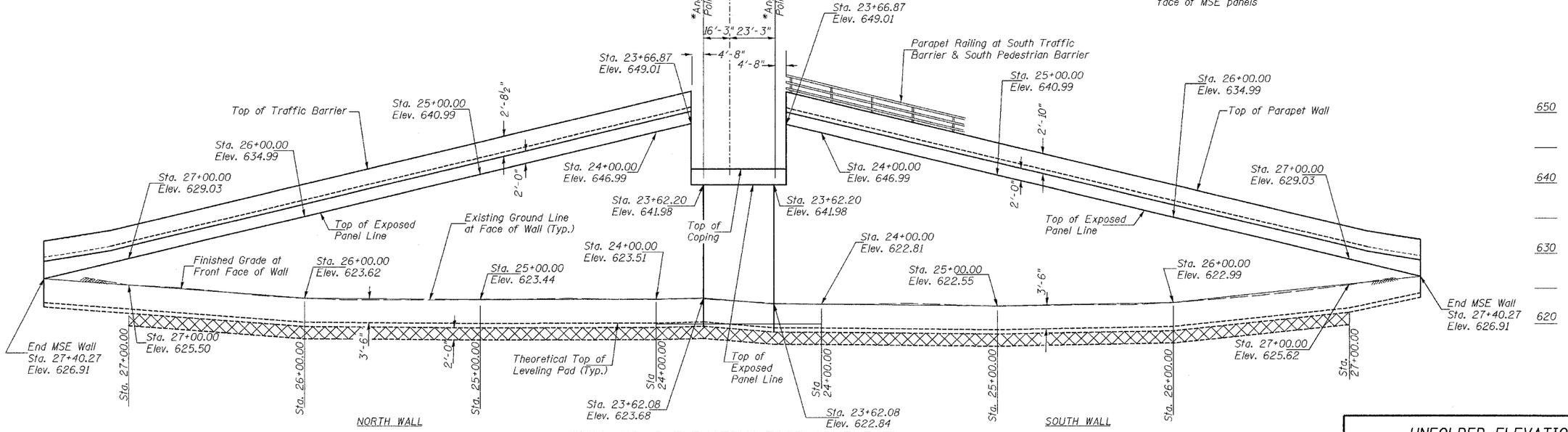

WALL NO. 2 ELEVATION EAST ABUTMENT)

(Unfolded Elevation View)

* Angle point taken at front face of MSE panels

Limits of removal below existing grade. Final limits of Removed and Disposed of Unsuitable Materials shall be as determined by the Engineer.

DESIGNED	JOH
CHECKED	BRT
DRAWN	TC & TD
CHECKED	JOH

UNFOLDED ELEVATION
MSE WALL NO. 1 & 2
FAU ROUTE 6145
SECTION 01-00590-00-BR (COUNTY)
LASALLE COUNTY
STATION 16+66.11 TO 27+40.27

HUTCHISON ENGINEERING, INC.
JACKSONVILLE & JOLIET, ILLINOIS

Date: 3 /10 /2006

2130b004r

F.A.U. RTE.	SECTION	COUNTY	TOTAL SHEETS	SHEET NO.
6145	*	LASALLE	168	126
FED. ROAD DIST. NO. 3	ILLINOIS	FED. AID PROJECT		

SHEET NO. 5
23 SHEETS

* 01-00590-00-BR (County)

CONTRACT NO. 87293

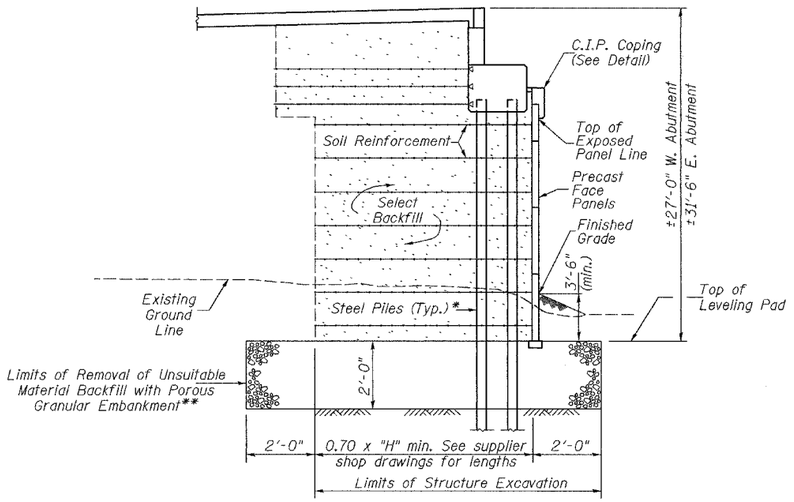

* Piles shall be driven prior to placement of the Reinforcement Select Fill and coated with Coal Tar Epoxy from the bottom of the select fill to 1" above the base of the abutment. The cost of the Coal Tar Epoxy Coating shall be included with the cost of the Mechanically Stabilized Earth Retaining Wall.

** The Porous Granular Embankment shall have a minimum Friction angle of 30 degrees. The contractor shall either drive the piles after excavation and prior to Porous Granular placement or limit the maximum aggregate size placed near the proposed piles to 0.5 inch to allow the pile penetration without damage.

SECTION AT ABUTMENT

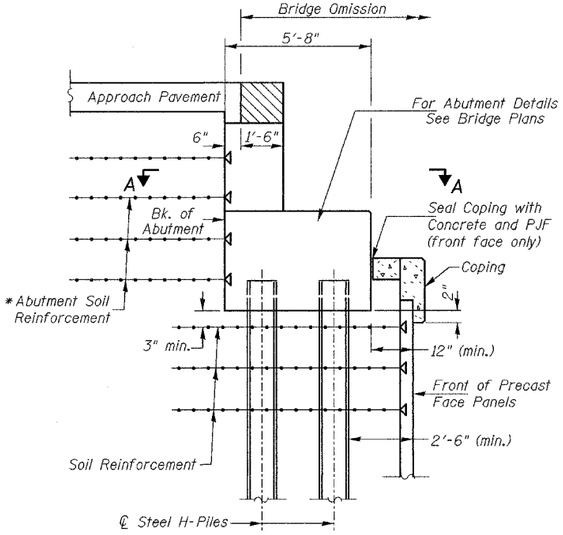

ABUTMENT CAP SECTION

* The M.S.E. wall supplier is to design the abutment soil reinforcement to resist a horizontal force of 1.3 kips/ft. of abutment.

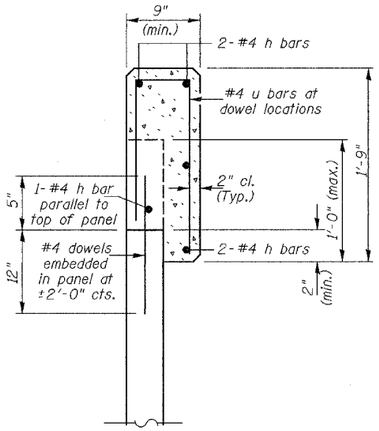

SECTION CAST-IN-PLACE COPING

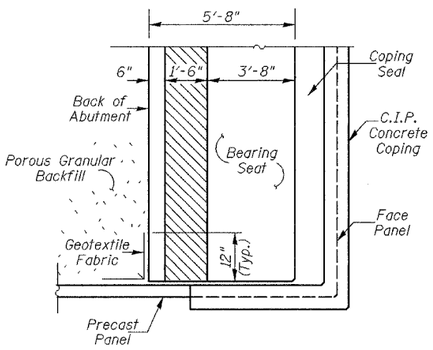

SECTION A-A

DESIGNED	JOH
CHECKED	BRT
DRAWN	TC & TD
CHECKED	JOH

21906005r

ABUTMENT & WALL DETAILS
MSE WALL NO. 1 & 2
FAU ROUTE 6145
SECTION 01-00590-00-BR (COUNTY)
LASALLE COUNTY
STATION 16+66.11 TO 27+40.27

HUTCHISON ENGINEERING, INC.
JACKSONVILLE & JOLIET, ILLINOIS
Date: 3 /10 /2006

F.A.U. RTE.	SECTION	COUNTY	TOTAL SHEETS	SHEET NO.
6145	*	LASALLE	168	127
FED. ROAD DIST. NO. 3	ILLINOIS	FED. AID PROJECT		

SHEET NO. 6
23 SHEETS

* 01-00590-00-BR (County)

CONTRACT NO. 87293

LEGEND

Concrete Superstructure Quantity

Limits of Unsuitable Material Removal & Replacement

Concrete Structures Quantity

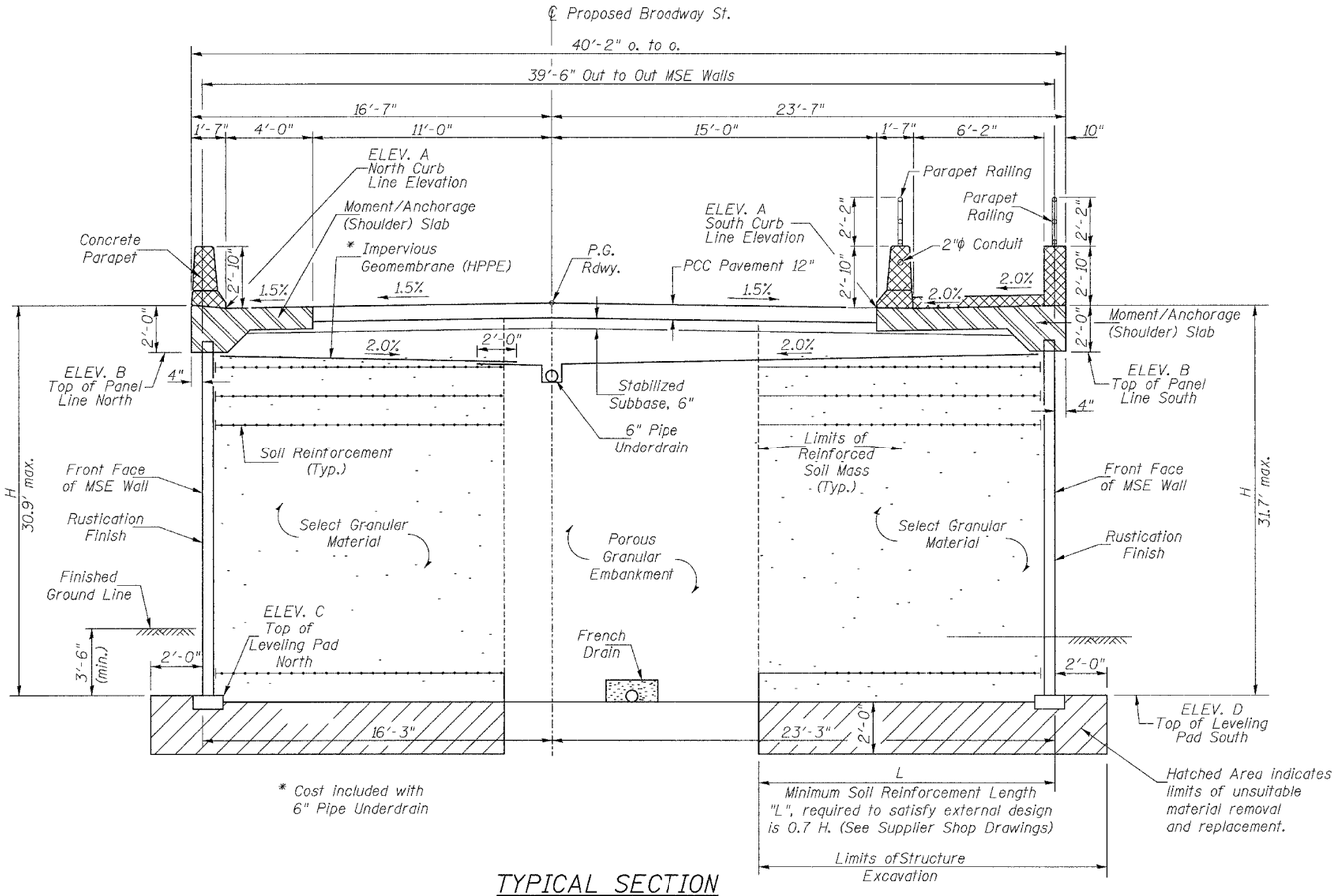

* Cost included with 6" Pipe Underdrain

TYPICAL SECTION

(Looking East)

ELEVATIONS

	STATION	℄ RDWY. ELEV. P.G.	ELEV. A NORTH & SOUTH CURB LINE	ELEV. B TOP OF PANELS (NORTH & SOUTH)	ELEV. C TOP LEVELING PAD (NORTH)	ELEV. D TOP LEVELING PAD (SOUTH)	H (FT.) North	H (FT.) South
WALL NO. 1	16+66.11	629.76	629.45	627.66	623.89	624.24	5.8	5.4
	17+00.00	630.90	630.67	628.80	623.89	624.24	6.9	6.6
	17+25.00	631.92	631.69	629.82	623.18	623.59	8.6	8.2
	17+50.00	633.10	632.87	631.00	622.47	622.94	10.5	10.1
	17+75.00	634.43	634.20	632.33	621.76	622.29	12.6	12.0
	18+00.00	635.90	635.67	633.80	621.04	621.65	14.8	14.2
	18+25.00	637.40	637.17	635.30	620.71	621.26	16.6	16.1
	18+50.00	638.90	638.67	636.80	620.38	620.87	18.4	17.9
	18+75.00	640.40	640.17	638.30	620.05	620.48	20.2	19.8
	19+00.00	641.90	641.67	639.80	619.72	620.10	22.1	21.7
	19+25.00	643.40	643.17	641.30	619.72	620.02	23.6	23.3
	19+50.00	644.90	644.67	642.80	619.72	619.84	25.1	25.0
	19+75.00	646.40	646.17	644.30	619.72	619.84	26.6	26.5
	19+83.12	646.89	646.67	644.79	619.72	619.84	27.1	27.0
WALL NO. 2	23+68.37	650.92	650.69	648.82	619.94	619.12	30.9	31.7
	23+75.00	650.56	650.33	648.46	619.94	619.12	30.5	31.3
	24+00.00	649.10	648.87	647.00	619.94	619.12	29.1	29.9
	24+25.00	647.60	647.37	645.50	619.94	619.12	27.6	28.4
	24+50.00	646.10	645.87	644.00	619.94	619.12	26.1	26.9
	24+75.00	644.60	644.37	642.50	619.94	619.12	24.6	25.4
	25+00.00	643.10	642.87	641.00	619.94	619.05	23.1	24.0
	25+25.00	641.60	641.37	639.50	619.98	619.16	21.5	22.3
	25+50.00	640.10	639.87	638.00	620.03	619.27	20.0	20.7
	25+75.00	638.60	638.37	636.50	620.07	619.38	18.4	19.1
	26+00.00	637.10	636.87	635.00	620.12	619.49	16.9	17.5
	26+25.00	635.60	635.37	633.50	620.59	620.15	14.9	15.4
	26+50.00	634.10	633.87	632.00	621.06	620.81	12.9	13.2
	26+75.00	632.60	632.37	630.50	621.53	621.47	11.0	11.0
	27+00.00	631.14	630.91	629.04	622.00	622.12	9.0	8.9
	27+40.27	629.10	628.79	626.91	622.00	622.40	6.9	6.5

NOTE:
The limits of Porous Granular Embankment based on the select fill limits extends 0.7 x height of wall behind wall face. The PGE quantities may be adjusted in the field according to actual wall design and select granular material quantities.
The Contractor may substitute select granular fill for PGE at no additional cost.

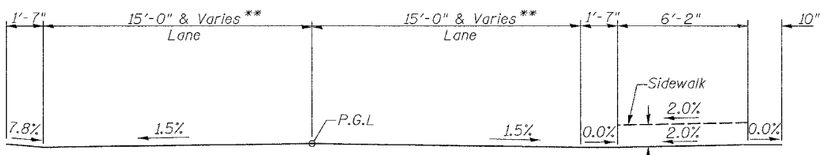

PROPOSED ROADWAY CROSS SLOPES

(Looking East)

** See Sheet #11 of 23 for end of wall dimensions.

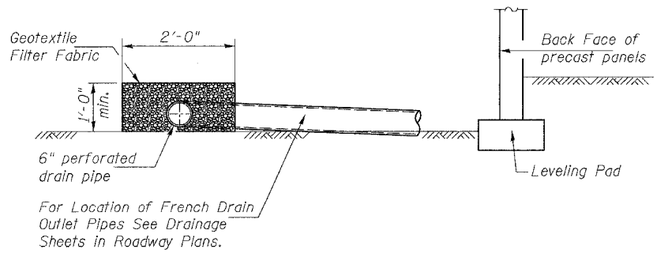

FRENCH DRAIN DETAIL AT MSE WALLS

The French Drain installation shall follow Article 601 of the Standard Specifications except that the drain will be filled with CA-5 or CA-7 coarse aggregate. The trench shall be lined with Geotechnical Fabric for French Drains and have a 6" diameter drain pipe located near the base of the excavation. The cost of Geotechnical Fabric and Drain Pipe is included with pay item French Drain.

DESIGNED	JOH
CHECKED	BRT
DRAWN	TD
CHECKED	JOH

TYPICAL SECTION
MSE WALL NO. 1 & 2
FAU ROUTE 6145
SECTION 01-00590-00-BR (COUNTY)
LASALLE COUNTY
STATION 16+66.11 TO 27+40.27

HUTCHISON ENGINEERING, INC.
JACKSONVILLE & JOLIET, ILLINOIS
Date: 3 /10 /2006

2190b006r

ROUTE NO.	SEC	COUNTY	TOTAL SHEETS	SHEET NO.
FAU 6145	*	LASALLE	168	128
FED. ROAD DIST. NO. 3	ILLINOIS	PROJECT		

SHEET NO. 7
23 SHEETS

* 01-00590-00-BR (County)

CONTRACT NO. 87293

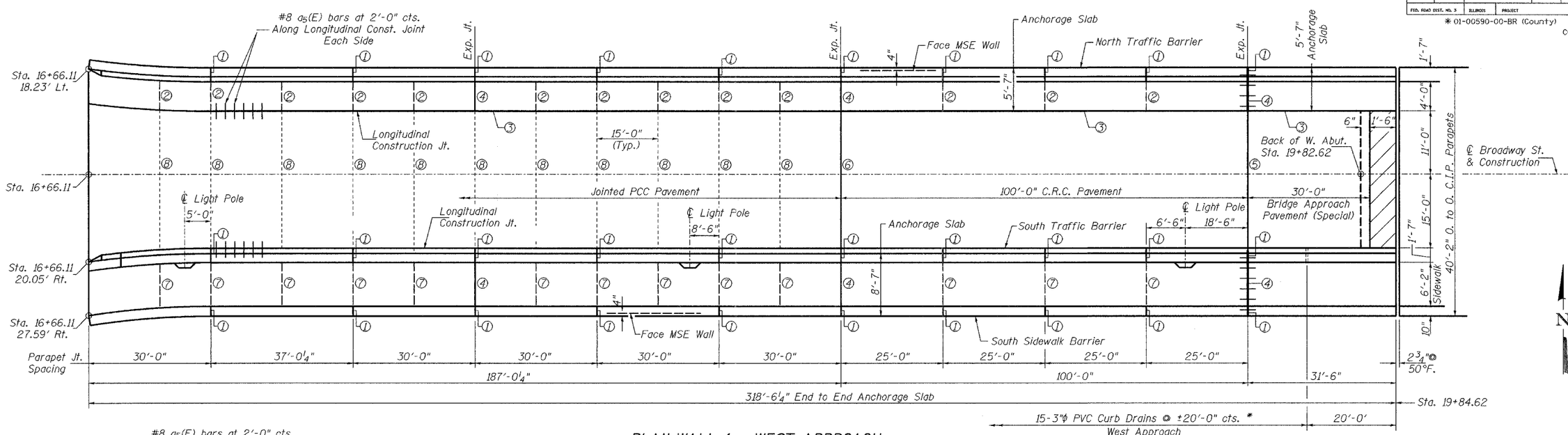

PLAN WALL 1 - WEST APPROACH

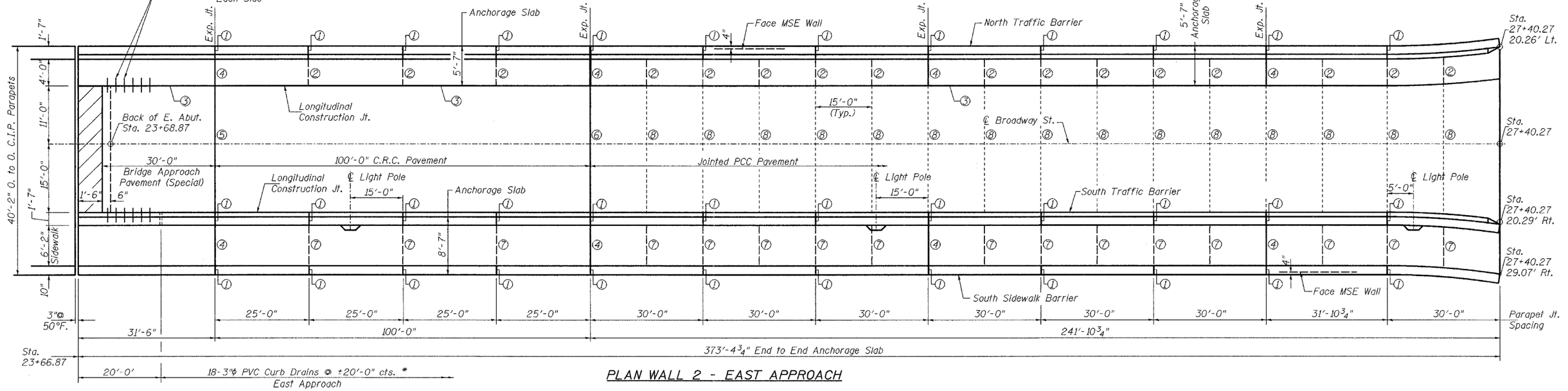

PLAN WALL 2 - EAST APPROACH

DESIGNED	JOH
CHECKED	BRT
DRAWN	TD
CHECKED	JOH

* Cost included with Concrete Superstructure.

LEGEND

① Pavement Joint
② Transverse Sawed Joint in Anchorage Slab
③ Longitudinal Pavement Joint
④ Transverse Expansion Joint in Anchorage Slab
⑤ Transverse Pavement Joint
⑥ Transverse Pavement Joint
⑦ Sawed Joint in Anchorage Slab and Sidewalk
⑧ Transverse Sawed Joint in PCC Pavement

SHOULDER SLAB & PAVEMENT PLAN
FAU ROUTE 6145
SECTION 01-00590-00-BR (COUNTY)
LASALLE COUNTY
STATION 16+66.11 TO 27+40.27

HUTCHISON ENGINEERING, INC.
JACKSONVILLE & JOLIET, ILLINOIS

Date: 3 /10 /2006

2190b007r

ROUTE NO.	SEC	COUNTY	TOTAL SHEETS	SHEET NO.
FAU 6145	*	LASALLE	168	129
FED. ROAD DIST. NO. 3	ILLINOIS	PROJECT		

SHEET NO. 8
23 SHEETS

* 01-00590-00-BR (County)

CONTRACT NO. 87293

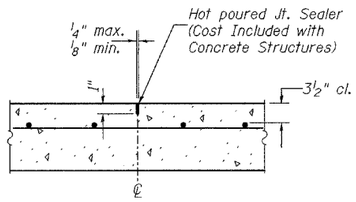

TRANSVERSE SAWED CONSTRUCTION JOINT DETAIL

(In Anchorage Slab)

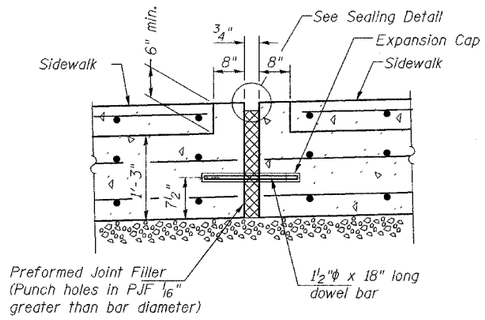

SECTION C-C

(Transverse Expansion Joint)

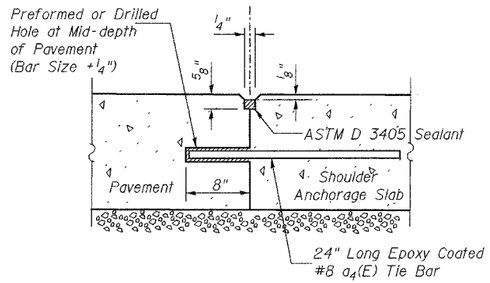

LONGITUDINAL CONSTRUCTION JOINT GROUTED-IN-PLACE TIE BAR

(See Art. 420.10(d) of Standard Specifications)

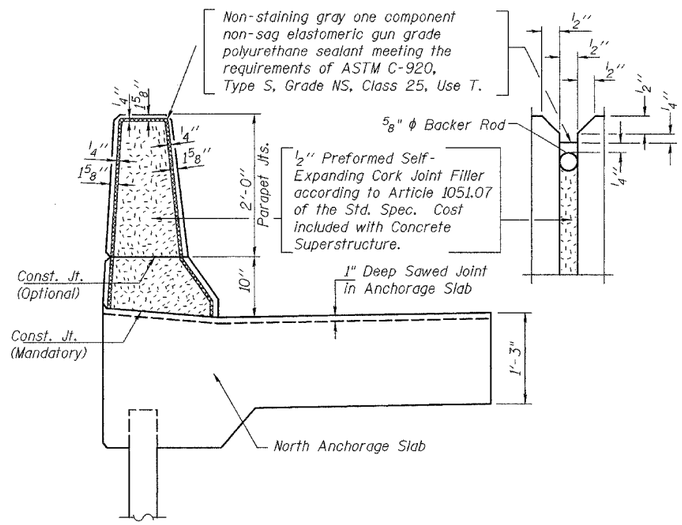

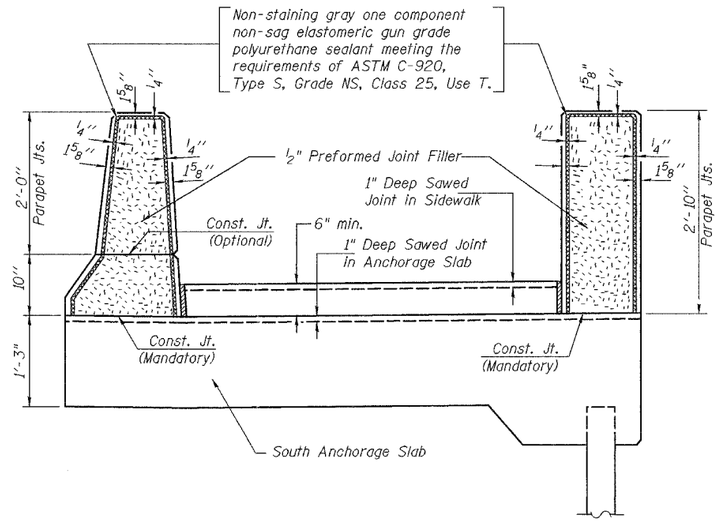

PARAPET JOINT, SLAB & SIDEWALK CONTRACTION JOINT DETAIL

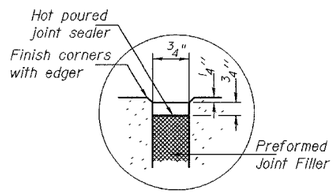

SEALING DETAIL

DESIGNED	JOH
CHECKED	BRT
DRAWN	TD
CHECKED	JOH

2190b008r

NOTES

Reinforcement bars designated (E) shall be epoxy coated.

All edges shall have a 3/4" chamfer unless noted otherwise.

Sawed Construction Joints and Construction Joints in Shoulders, and grooved joints and expansion joints in Parapets, shall align with sawed contractions joints in PCC Pavement (Jointed)

PARAPET, SHOULDER & PAVEMENT JOINT DETAILS
FAU ROUTE 6145
SECTION 01-00590-00-BR (COUNTY)
LASALLE COUNTY
STATION 16+66.11 TO 27+40.27

HUTCHISON ENGINEERING, INC.
JACKSONVILLE & JOLIET, ILLINOIS

Date: 3 /10 /2006

ROUTE NO.	SEC	COUNTY	TOTAL SHEETS	SHEET NO.
FAU 6145	*	LASALLE	168	130
FED. ROAD DIST. NO. 3	ILLINOIS	PROJECT		

SHEET NO. 9
23 SHEETS

* 01-00590-00-BR (County)

CONTRACT NO. 87293

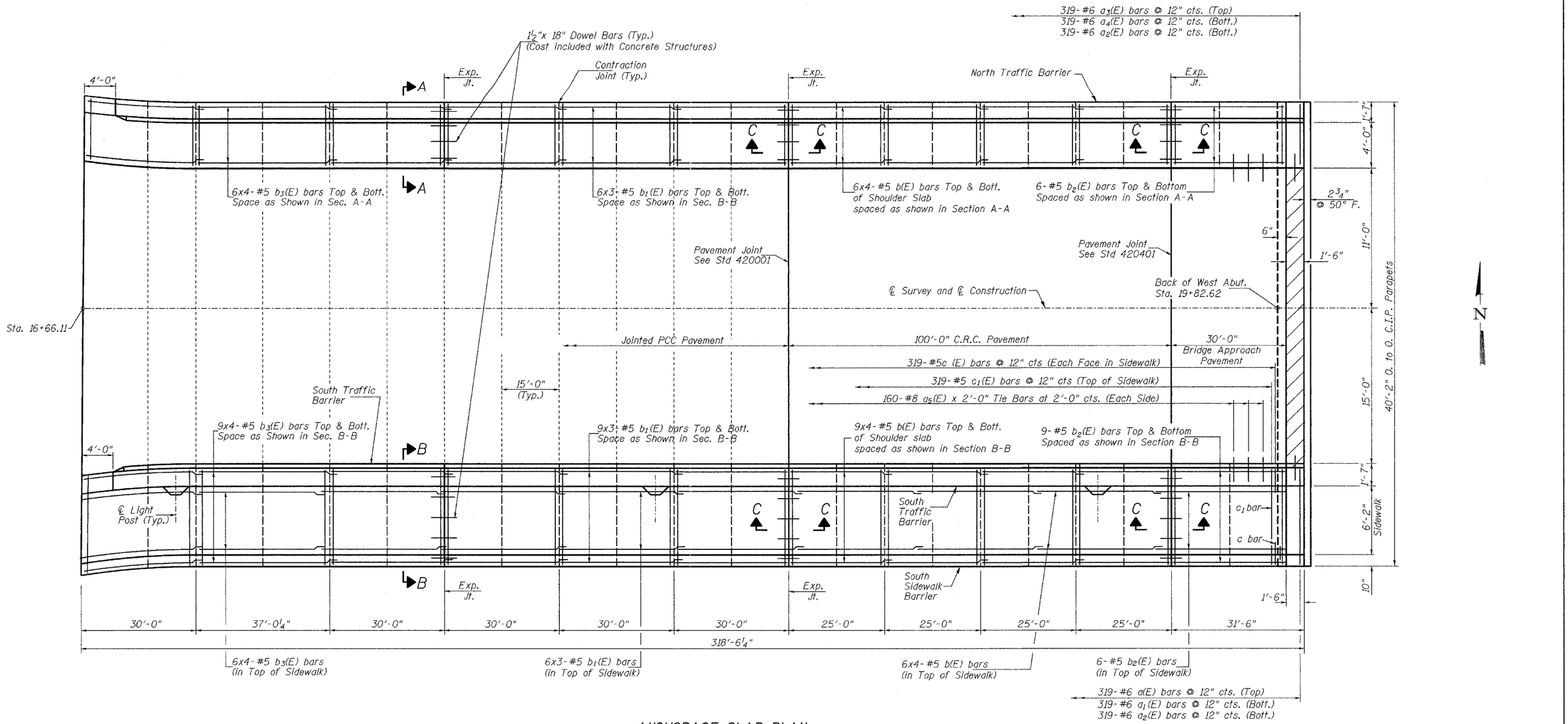

ANCHORAGE SLAB PLAN
WALL 1
(West Approach)

MIN. BAR LAP
#5 bars = 2'-2"

NOTES

1. Saw cuts for crack control and joint sealing shall be made in two steps. A ⅜" saw cut shall be provided as a joint sealant reservoir to the depth recommended by the sealant manufacturer and approved by the Engineer.
2. Contractor shall match location of sawed joints in pavement, shoulder slab and sidewalk.
3. For Section A-A & B-B See Sh.# 12 of 23. For Section C-C See Sh.# 8 of 23.

DESIGNED	JOH
CHECKED	BRT
DRAWN	TD
CHECKED	JOH

2190b009r

SHOULDER SLAB - WALL 1
WEST APPROACH
FAU ROUTE 6145
SECTION 01-00590-00-BR (COUNTY)
LASALLE COUNTY
STATION 16+66.11 TO 19+84.63

HUTCHISON ENGINEERING, INC.
JACKSONVILLE & JOLIET, ILLINOIS

Date: 3 /10 /2006

ROUTE NO.	SEC	COUNTY	TOTAL SHEETS	SHEET NO.
FAU 6145	*	LASALLE	168	131
FED. ROAD DIST. NO. 3	ILLINOIS	PROJECT		

SHEET NO. 10
23 SHEETS

* 01-00590-00-BR (County)

CONTRACT NO. 87293

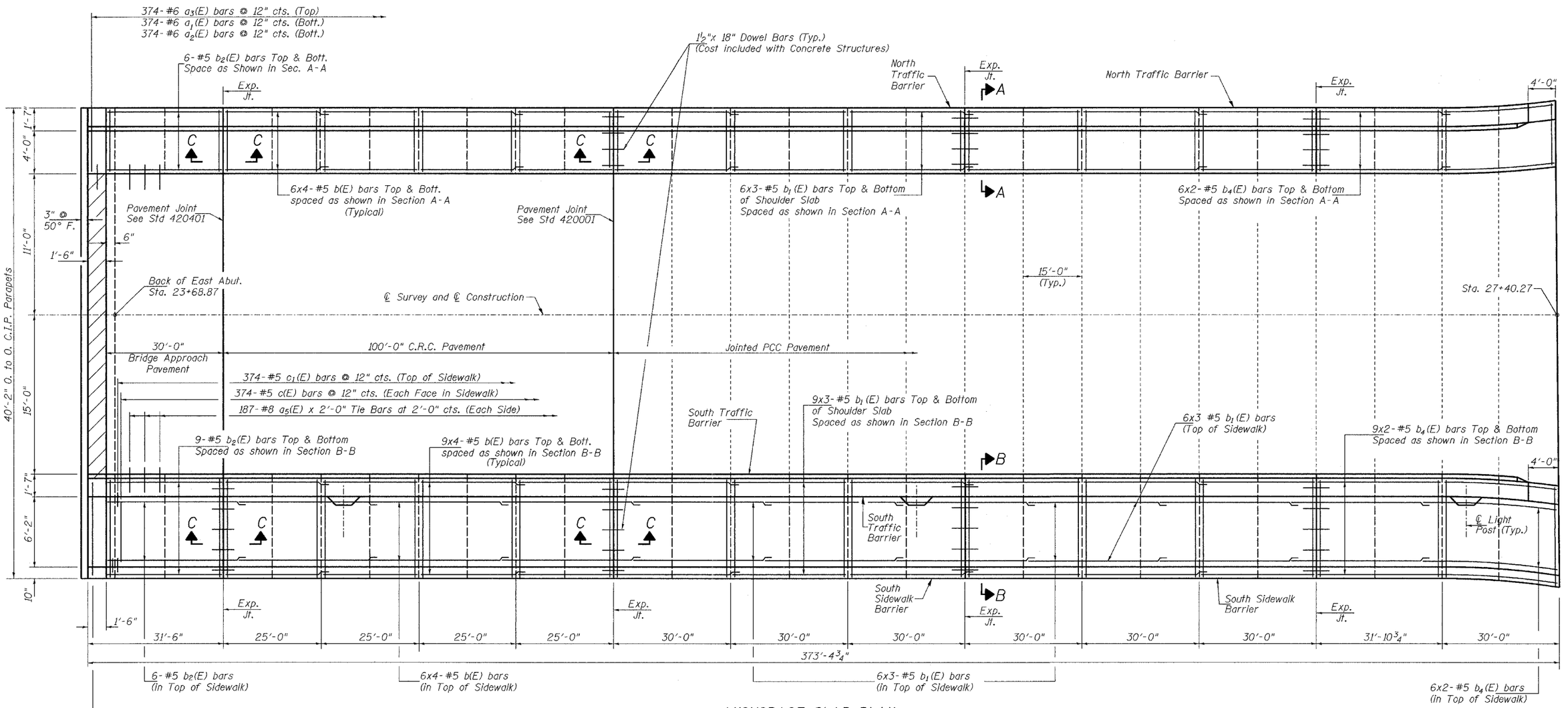

ANCHORAGE SLAB PLAN
WALL 2
(East Approach)

MIN. BAR LAP
#5 bars = 2'-2"

NOTES
1. Saw cuts for crack control and joint sealing shall be made in two steps. A $\frac{3}{8}$" saw cut shall be provided as a joint sealant reservoir to the depth recommended by the sealant manufacturer and approved by the Engineer.
2. Contractor shall match location of sawed joints in pavement, shoulder slab and sidewalk.
3. For Section A-A & B-B See Sh.# 12 of 23. For Section C-C See Sh.# 8 of 23.

DESIGNED	JOH
CHECKED	BRT
DRAWN	TD
CHECKED	JOH

SHOULDER SLAB - WALL 2
EAST APPROACH
FAU ROUTE 6145
SECTION 01-00590-00-BR (COUNTY)
LASALLE COUNTY
STATION 23+66.87 TO 27+40.27

HUTCHISON ENGINEERING, INC.
JACKSONVILLE & JOLIET, ILLINOIS

Date: 3 /10 /2006

2190b010r

ROUTE NO.	SEC	COUNTY	TOTAL SHEETS	SHEET NO.
FAU 6145	*	LASALLE	168	132
FED. ROAD DIST. NO. 3	ILLINOIS	PROJECT		

SHEET NO. 11
23 SHEETS

* 01-00590-00-BR (County)

CONTRACT NO. 87293

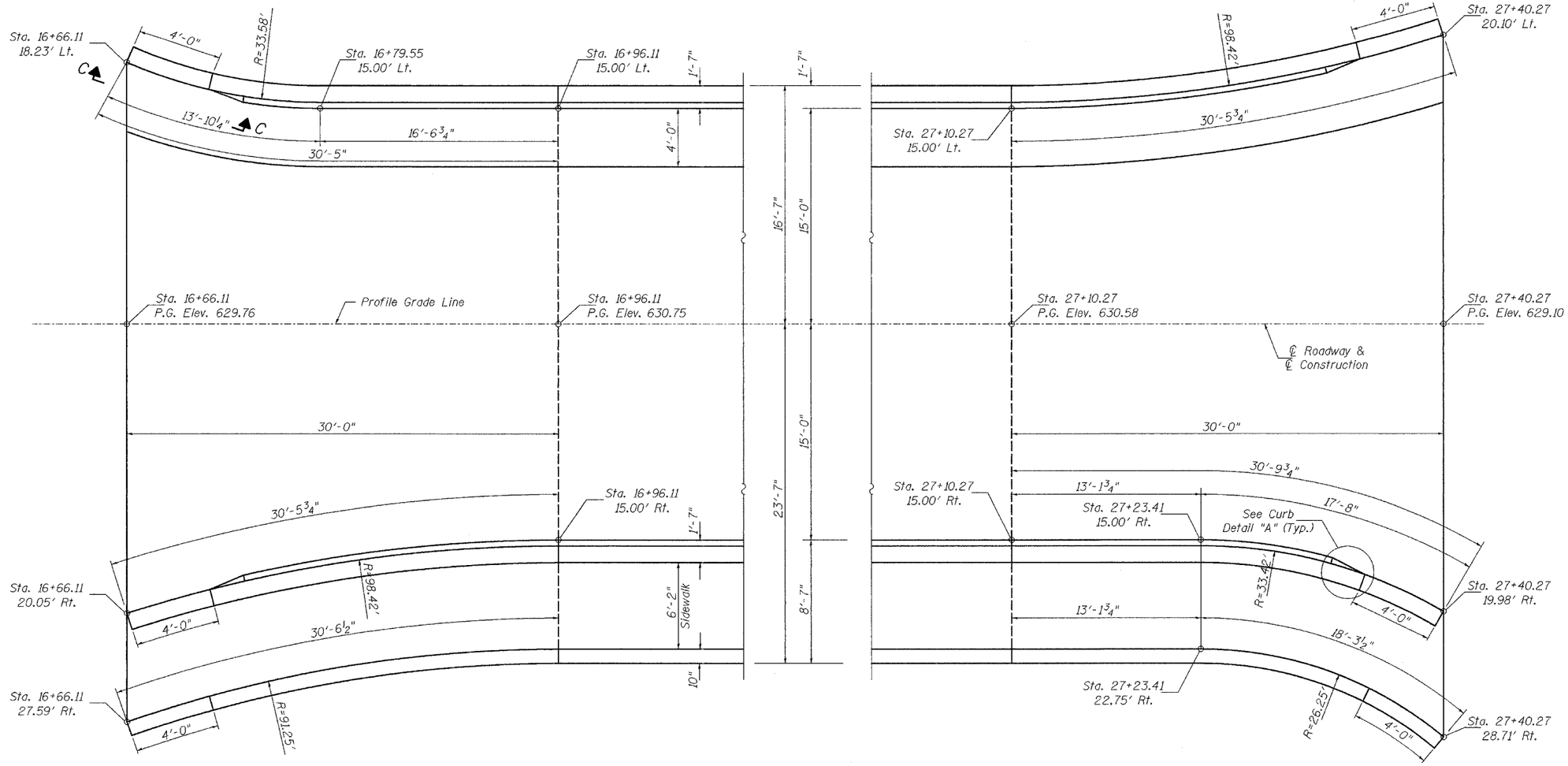

PARTIAL PLAN WALL NO. 1

PARTIAL PLAN WALL NO. 2

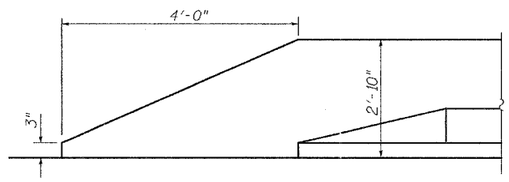

VIEW A-A

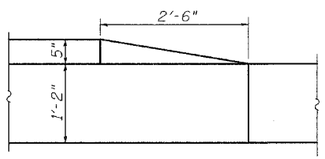

CURB DETAIL "A"

DESIGNED	JOH
CHECKED	BRT
DRAWN	TD
CHECKED	JOH

END OF WALL LAYOUT & DETAILS
MSE WALL NO. 1 & 2
FAU ROUTE 6145
SECTION 01-00590-00-BR (COUNTY)
LASALLE COUNTY
STATION 16+66.11 TO 27+40.27

HUTCHISON ENGINEERING, INC.
JACKSONVILLE & JOLIET, ILLINOIS

Date: 3 /10 /2006

2190b011r

F.A.U. RTE.	SECTION	COUNTY	TOTAL SHEETS	SHEET NO.
6145	*	LASALLE	168	133
FED. ROAD DIST. NO. 3	ILLINOIS	FED. AID PROJECT		

SHEET NO. 12
23 SHEETS

* 01-00590-00-BR (County)

CONTRACT NO. 87293

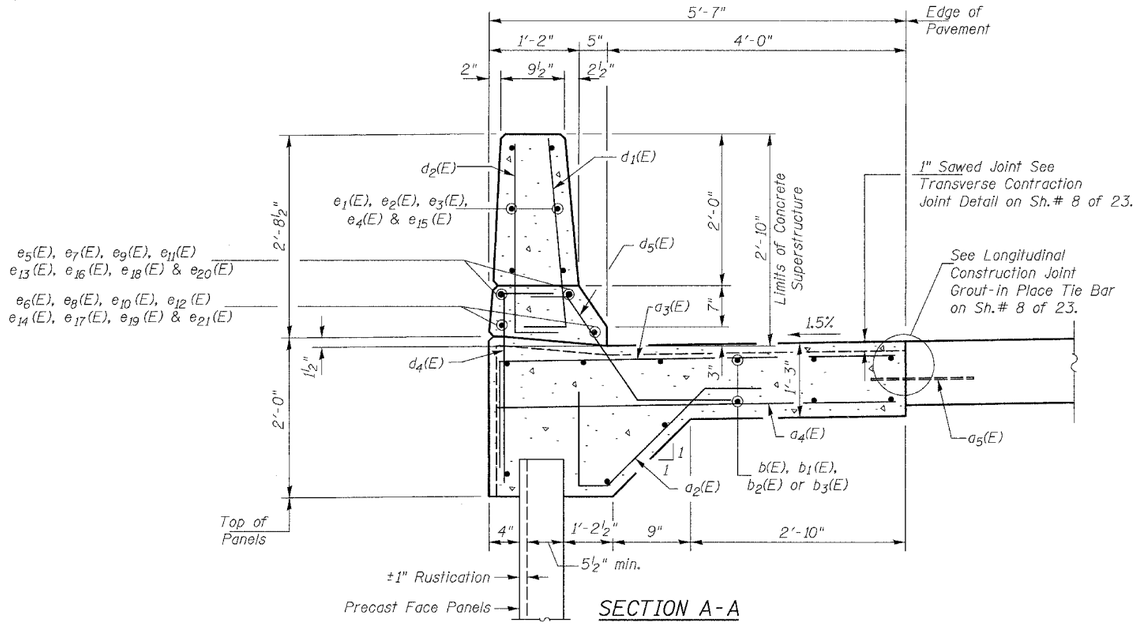

SECTION A-A

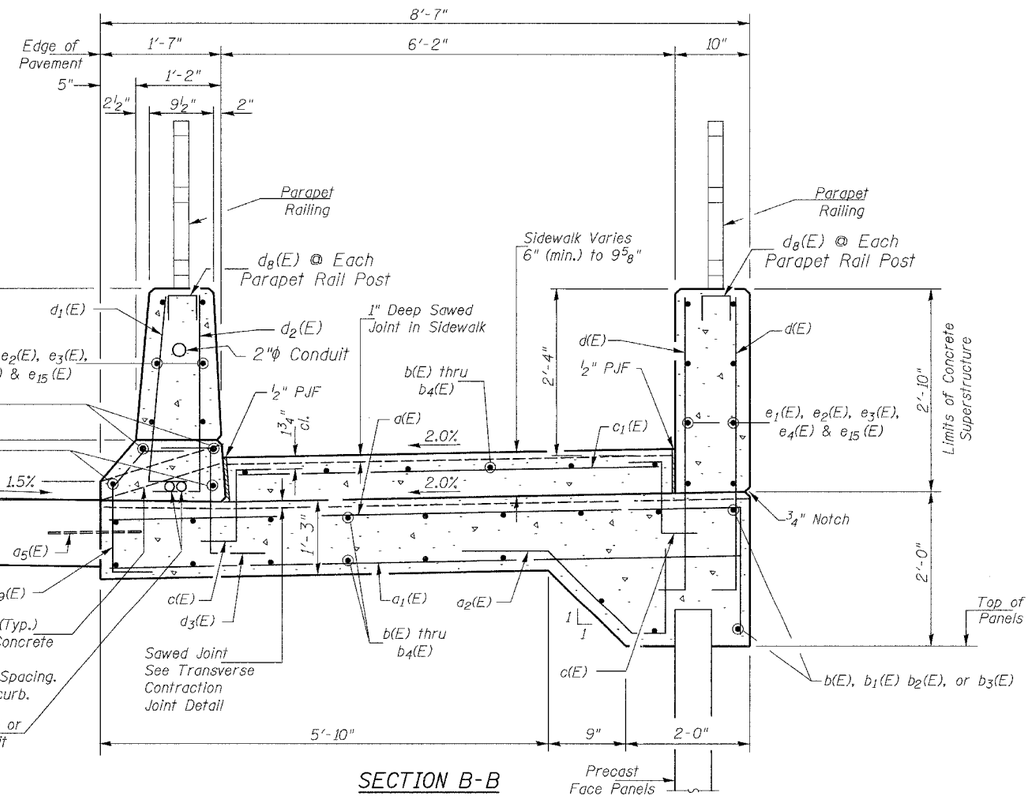

SECTION B-B

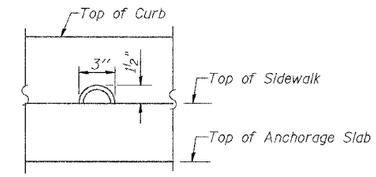

CURB DRAIN ELEVATION

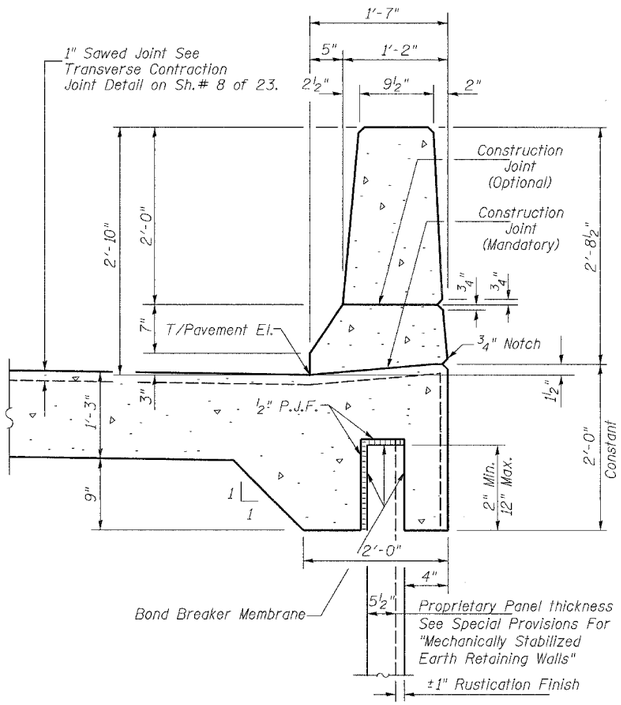

TYPICAL SECTION THRU PARAPET

(North Parapet shown, South Parapet Similar)

DESIGNED	JOH
CHECKED	BRT
DRAWN	TC & TD
CHECKED	JOH

2190b012r

PARAPET AND SHOULDER DETAILS
MSE WALL NO. 1 & 2
FAU ROUTE 6145
SECTION 01-00590-00-BR (COUNTY)
LASALLE COUNTY
STATION 16+66.11 TO 27+40.27

HUTCHISON ENGINEERING, INC.
JACKSONVILLE & JOLIET, ILLINOIS
Date: 3 /10 /2006

CONTRACT NO. 87293

ROUTE NO.	SEC	COUNTY	TOTAL SHEETS	SHEET NO.
FAU 6145	*	LASALLE	168	134
FED. ROAD DIST. NO. 3	ILLINOIS	PROJECT		

* 01-00590-00-BR (County)

SHEET NO. 13
23 SHEETS

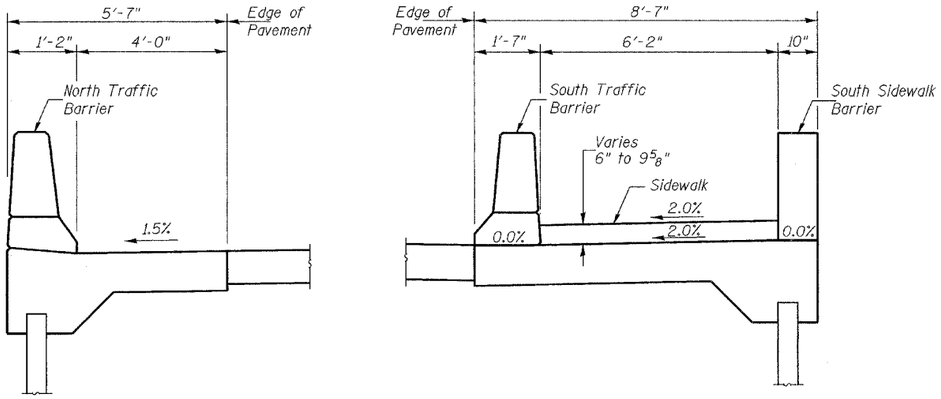

ANCHORAGE SLAB PAVEMENT CROSS SECTION

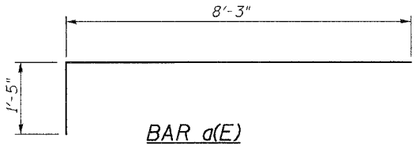

BAR d(E)

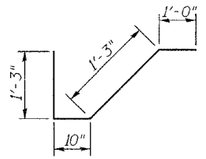

BAR a_2(E)

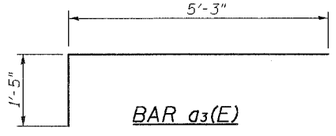

BAR a_3(E)

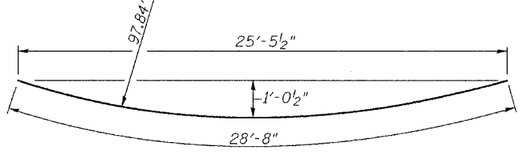

BARS e_5(E)

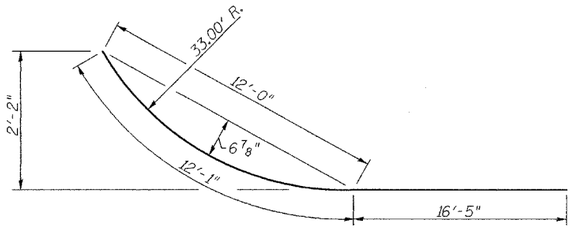

BARS e_{18}(E)

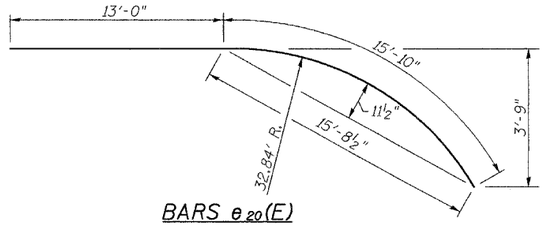

BARS e_{20}(E)

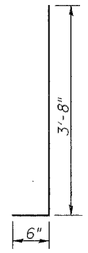

BAR d(E)

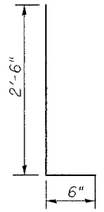

BAR d_1(E) & d_2(E)

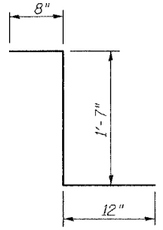

BAR d_3(E)

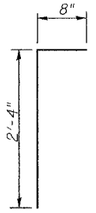

BAR d_4(E)

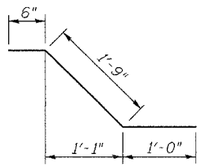

BAR d_5(E)

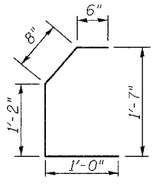

BAR d_9(E)

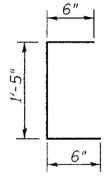

BAR d_{10}(E)

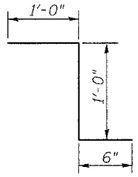

BAR c(E)

WALL NO. 1 & NO. 2
BAR LIST & BILL OF MATERIAL

Bar	Wall 1 No.	Wall 2 No.	Size	Length	Shape
d(E)	319	374	#6	9'-8"	
a_1(E)	319	374	#6	8'-3"	
a_2(E)	319	374	#6	4'-4"	
a_3(E)	319	374	#6	6'-8"	
a_4(E)	319	374	#6	5'-3"	
a_5(E)	320	374	#8	2'-0"	
b(E)	144	144	#5	26'-8"	
b_1(E)	108	216	#5	31'-6"	
b_2(E)	36	36	#5	31'-3"	
b_3(E)	72	-	#5	35'-0"	
b_4(E)	-	72	#5	32'-6"	
c(E)	638	748	#5	2'-6"	
c_1(E)	319	374	#5	5'-10"	
d(E)	640	748	#5	4'-2"	
d_1(E)	698	832	#5	3'-0"	
d_2(E)	698	832	#4	3'-0"	
d_3(E)	349	416	#4	3'-3"	
d_4(E)	349	416	#4	3'-0"	
d_5(E)	340	398	#5	3'-3"	
d_6(E)	10	10	#6	9'-4"	
d_7(E)	6	6	#6	4'-5"	
d_8(E)	140	156	#4	2'-1"	
d_9(E)	340	398	#5	3'-4"	
d_{10}(E)	18	18	#5	2'-5"	
e(E)	20	20	#4	30'-0"	
e_1(E)	20	-	#4	36'-9"	
e_2(E)	80	120	#4	29'-9"	
e_3(E)	80	80	#4	24'-9"	
e_4(E)	20	20	#4	31'-3"	
e_5(E)	2	2	#8	28'-8"	
e_6(E)	2	2	#5	28'-8"	
e_7(E)	4	-	#8	36'-9"	
e_8(E)	4	-	#5	36'-9"	
e_9(E)	16	24	#8	29'-9"	
e_{10}(E)	16	24	#5	29'-9"	
e_{11}(E)	16	16	#8	24'-9"	
e_{12}(E)	16	16	#5	24'-9"	
e_{13}(E)	4	4	#8	31'-3"	
e_{14}(E)	4	4	#5	31'-3"	
e_{15}(E)	-	20	#4	31'-6"	
e_{16}(E)	-	4	#8	31'-6"	
e_{17}(E)	-	4	#5	31'-6"	
e_{18}(E)	2	-	#8	28'-6"	
e_{19}(E)	2	-	#5	28'-6"	
e_{20}(E)	-	2	#8	28'-10"	
e_{21}(E)	-	2	#5	28'-10"	

Item	Location	Unit	Quantity
Reinforcement Bars, Epoxy Coated	Wall 1	LB	48,900
	Wall 2	LB	62,990
Concrete Structures	Wall 1	CU YD	243.2
	Wall 2	CU YD	288.2
Concrete Superstructure	Wall 1	CU YD	142.1
	Wall 2	CU YD	170.8

DESIGNED	JOH
CHECKED	BRT
DRAWN	TD
CHECKED	JOH

BAR LIST & BAR DETAILS
MSE WALL NO. 1 & 2
FAU ROUTE 6145
SECTION 01-00590-00-BR (COUNTY)
LASALLE COUNTY
STATION 16+66.11 TO 27+40.27

HUTCHISON ENGINEERING, INC.
JACKSONVILLE & JOLIET, ILLINOIS
Date: 3 /10 /2006

2190b013r

ROUTE NO.	SEC	COUNTY	TOTAL SHEETS	SHEET NO.
FAU 6145	*	LASALLE	168	135
FED. ROAD DIST. NO. 3	ILLINOIS	PROJECT		

* 01-00590-00-BR (County)

SHEET NO. 14
23 SHEETS

CONTRACT NO. 87293

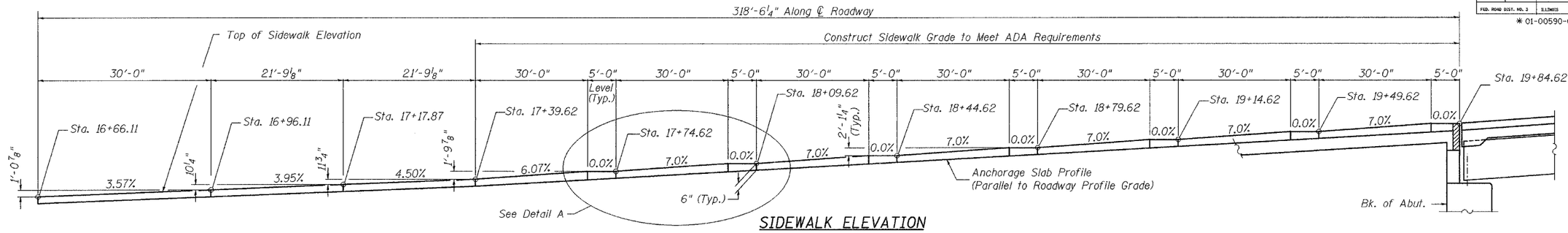

SIDEWALK ELEVATION

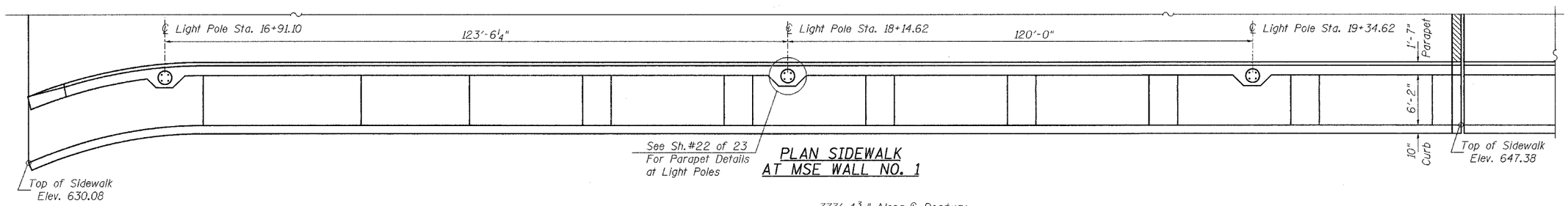

PLAN SIDEWALK AT MSE WALL NO. 1

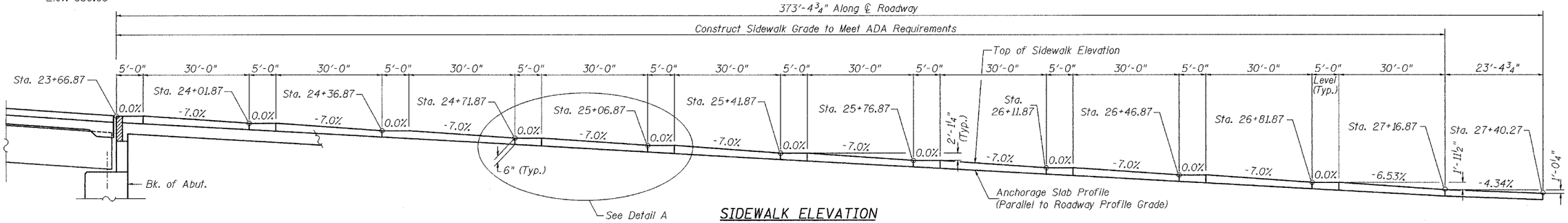

SIDEWALK ELEVATION

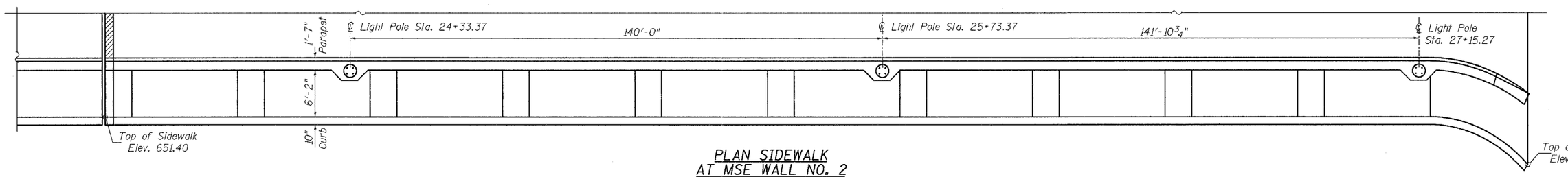

PLAN SIDEWALK AT MSE WALL NO. 2

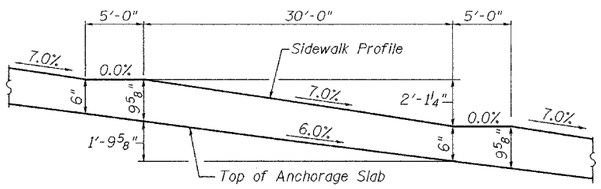

DETAIL A
(Typical Except as Noted)

DESIGNED	JOH
CHECKED	BRT
DRAWN	TD
CHECKED	JOH

N

SIDEWALK PROFILE & DETAILS
MSE WALL NO. 1 & 2
FAU ROUTE 6145
SECTION 01-00590-00-BR (COUNTY)
LASALLE COUNTY
STATION 16+96.11 TO 19+82.75

HUTCHISON ENGINEERING, INC.
JACKSONVILLE & JOLIET, ILLINOIS
Date: 3 /10 /2006

2190b014r

F.A.U. RTE.	SECTION	COUNTY	TOTAL SHEETS	SHEET NO.
6145	•	LASALLE	168	136
FED. ROAD DIST. NO. 3	ILLINOIS	FED. AID PROJECT		

SHEET NO. 15
23 SHEETS

* 01-00590-00-BR (County)

CONTRACT NO. 87293

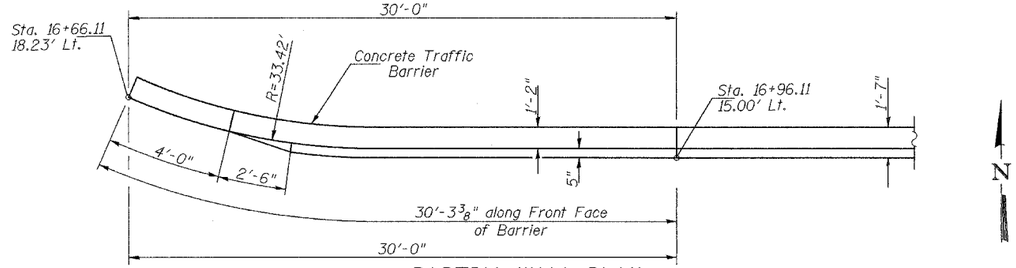

PARTIAL WALL PLAN

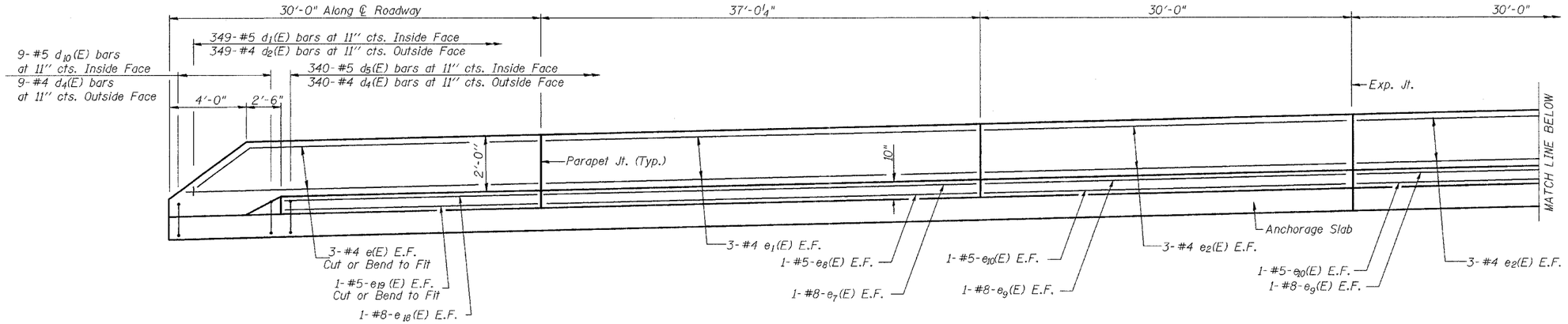

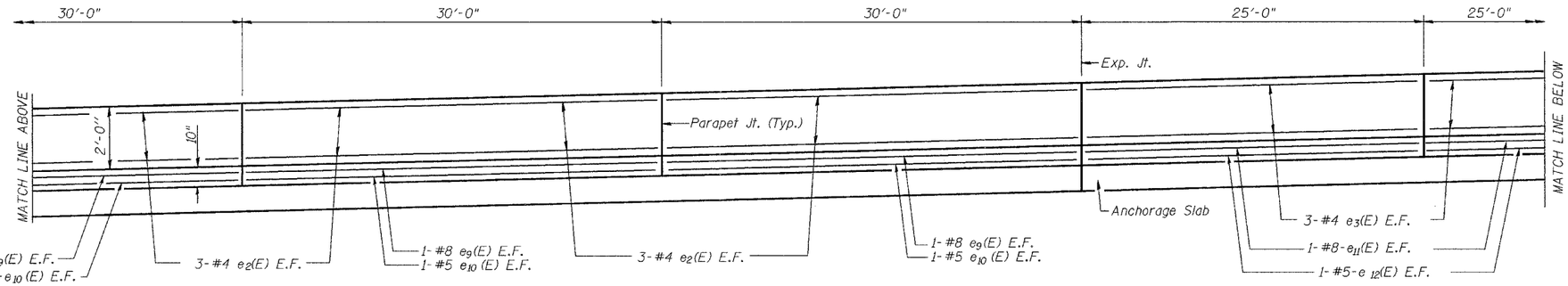

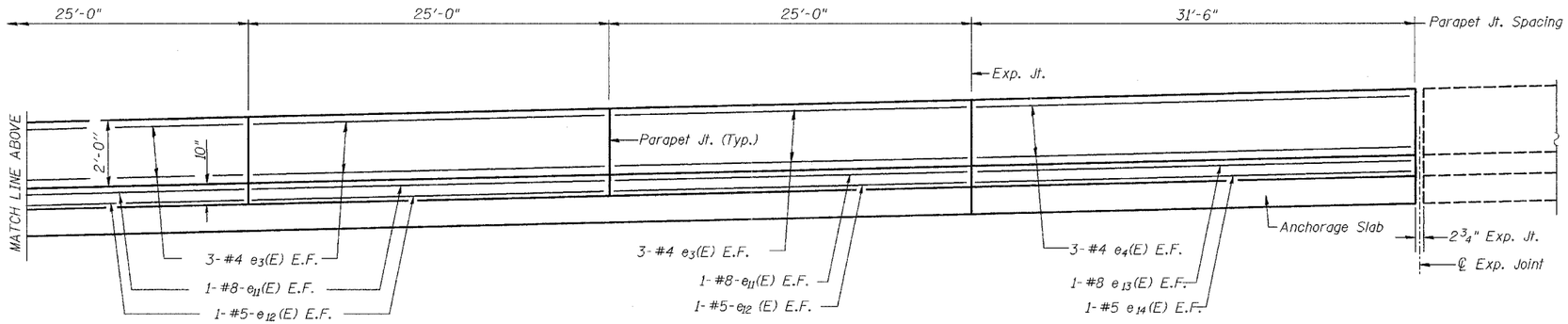

BAR LAP

#4 bar = 1'-8"
#5 bar = 2'-2"
#8 bar = 4'-6"

NOTE

Reinforcement in parapet included in Bar List on Sh.#13 of 23.

DESIGNED	JOH
CHECKED	BRT
DRAWN	TD
CHECKED	JOH

CONCRETE TRAFFIC BARRIER ELEVATION (North Parapet)

MSE WALL NO. 1

(Inside Face Looking North)

PARAPET JOINT SPACING
MSE WALL NO. 1
FAU ROUTE 6145
SECTION 01-00590-00-BR (COUNTY)
LASALLE COUNTY
STATION 16+66.11 TO 27+40.27

HUTCHISON ENGINEERING, INC.
JACKSONVILLE & JOLIET, ILLINOIS

Date: 3 /10 /2006

2190b015r

F.A.U. RTE.	SECTION	COUNTY	TOTAL SHEETS	SHEET NO.
6145	•	LASALLE	168	137
FED. ROAD DIST. NO. 3	ILLINOIS	FED. AID PROJECT		

SHEET NO. 16
23 SHEETS

* 01-00590-00-BR (County)

CONTRACT NO. 87293

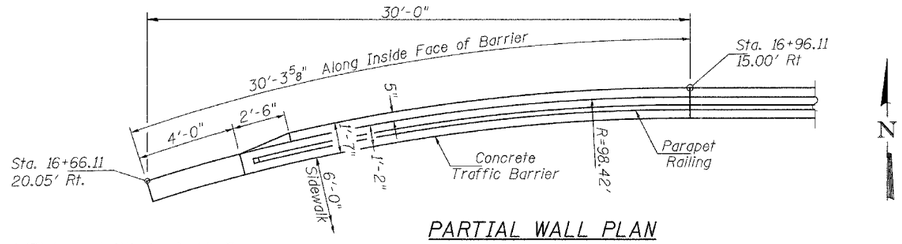

PARTIAL WALL PLAN

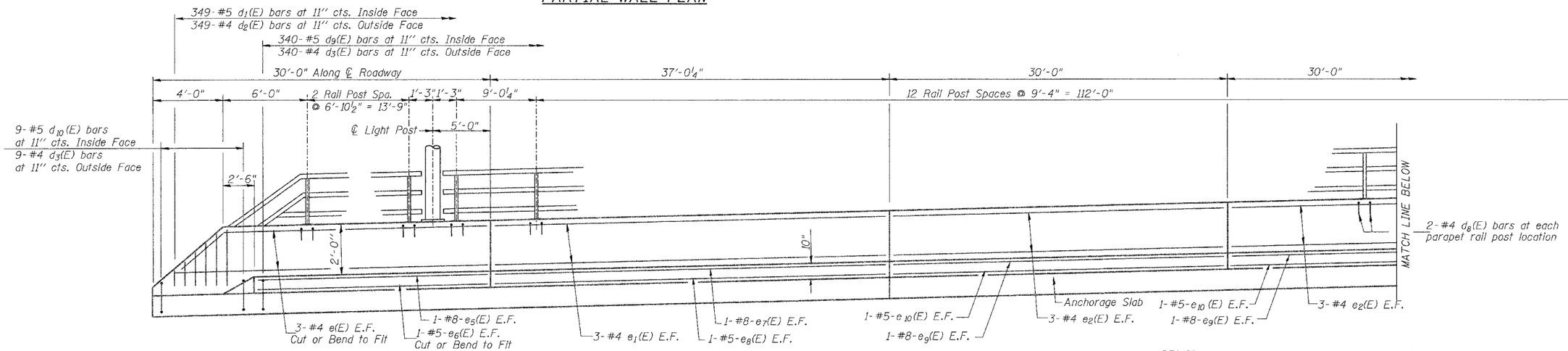

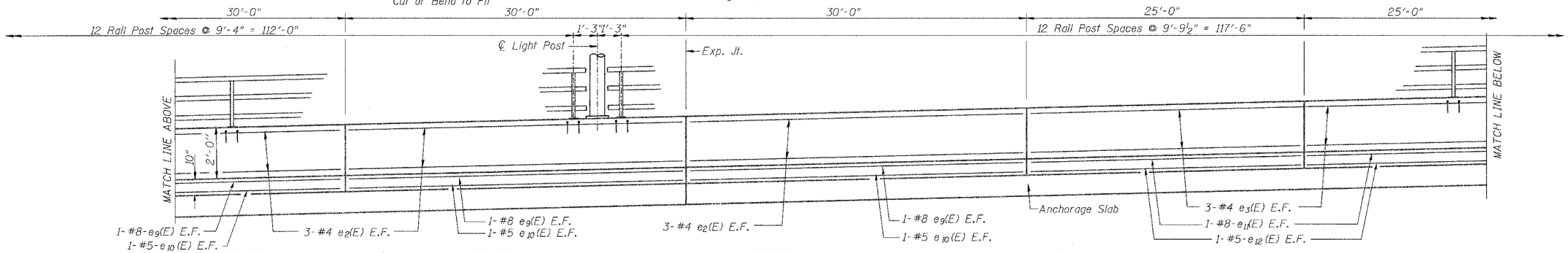

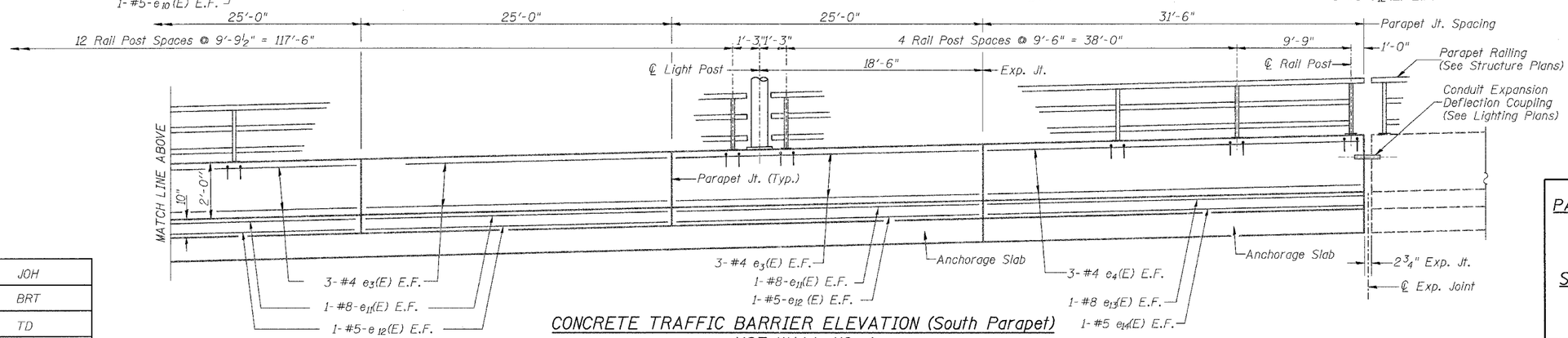

CONCRETE TRAFFIC BARRIER ELEVATION (South Parapet)
MSE WALL NO. 1
(Outside Face Looking North)

NOTE

Reinforcement in parapet included in Bar List on Sh.#13 of 23.

DESIGNED	JOH
CHECKED	BRT
DRAWN	TD
CHECKED	JOH

2190b015r

PARAPET JT. & RAIL POST SPACING
MSE WALL NO. 1
FAU ROUTE 6145
SECTION 01-00590-00-BR (COUNTY)
LASALLE COUNTY
STATION 16+66.11 TO 27+40.27

HUTCHISON ENGINEERING, INC.
JACKSONVILLE & JOLIET, ILLINOIS

Date: 3 /10 /2006

F.A.U. RTE.	SECTION	COUNTY	TOTAL SHEETS	SHEET NO.
6145	*	LASALLE	168	138
FED. ROAD DIST. NO. 3	ILLINOIS	FED. AID PROJECT		

SHEET NO. 17
23 SHEETS

* 01-00590-00-BR (County)

CONTRACT NO. 87293

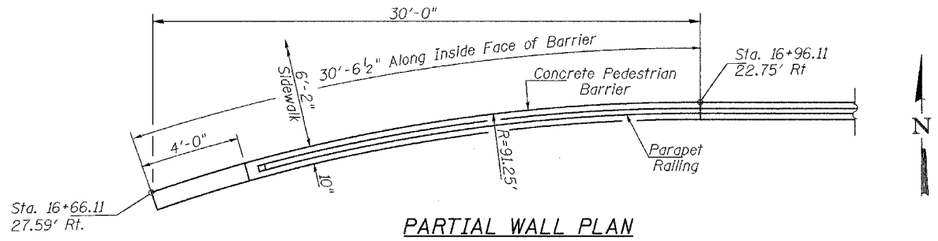

PARTIAL WALL PLAN

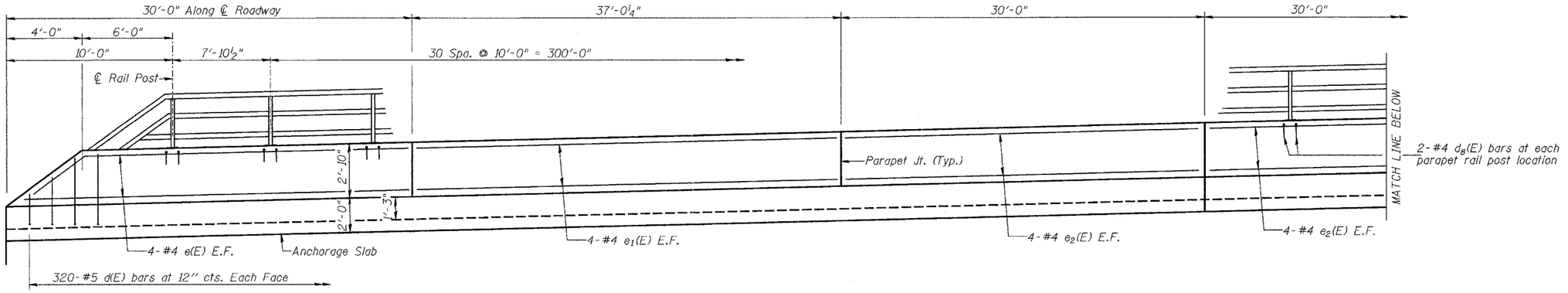

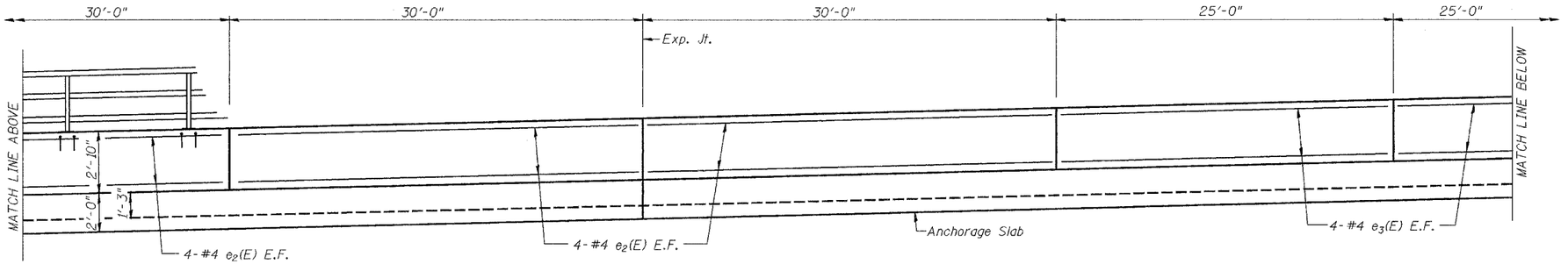

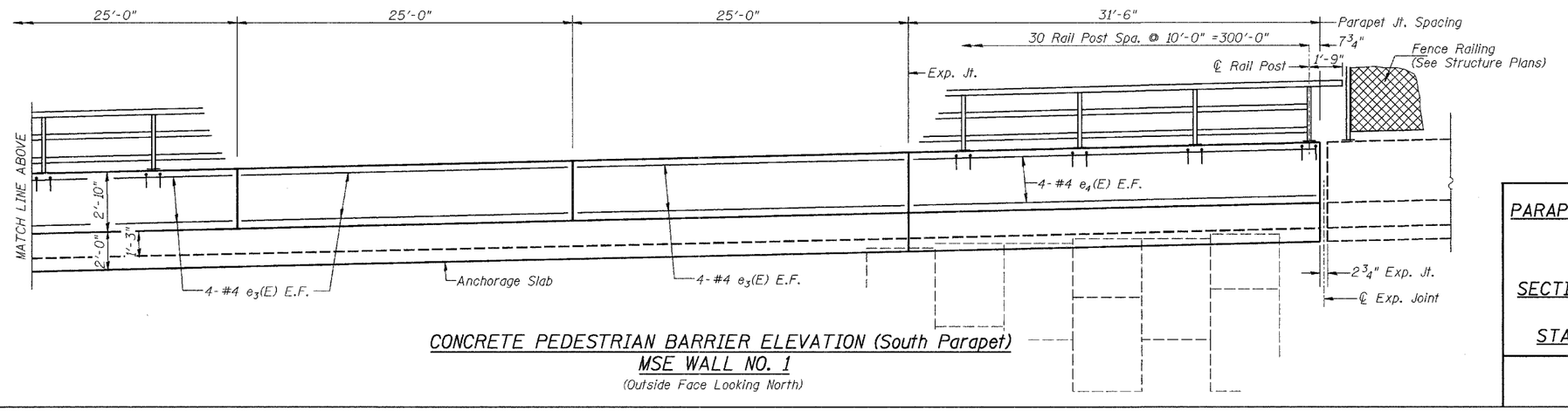

CONCRETE PEDESTRIAN BARRIER ELEVATION (South Parapet)
MSE WALL NO. 1
(Outside Face Looking North)

NOTE
Reinforcement in parapet included in Bar List on Sh.#13 of 23.

DESIGNED	JOH
CHECKED	BRT
DRAWN	TD
CHECKED	JOH

PARAPET JT. & RAIL POST SPACING
MSE WALL NO. 1
FAU ROUTE 6145
SECTION 01-00590-00-BR (COUNTY)
LASALLE COUNTY
STATION 16+66.11 TO 27+40.27

HUTCHISON ENGINEERING, INC.
JACKSONVILLE & JOLIET, ILLINOIS
Date: 3/10/2006

2190b015r

F.A.U. RTE.	SECTION	COUNTY	TOTAL SHEETS	SHEET NO.
6145	•	LASALLE	168	139
FED. ROAD DIST. NO. 3	ILLINOIS	FED. AID PROJECT		

SHEET NO. 18
23 SHEETS

* 01-00590-00-BR (County)

CONTRACT NO. 87293

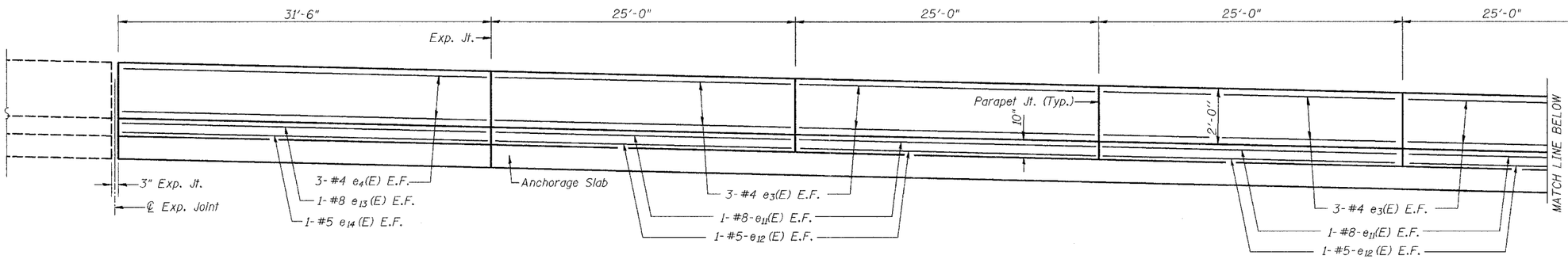

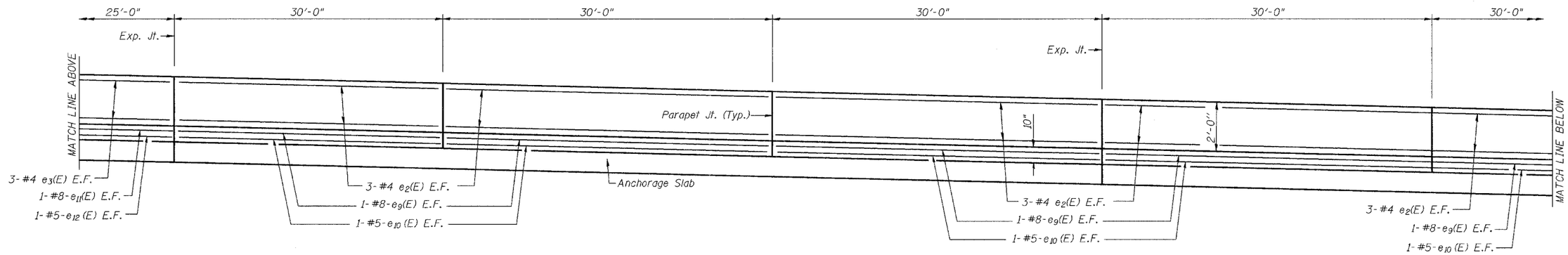

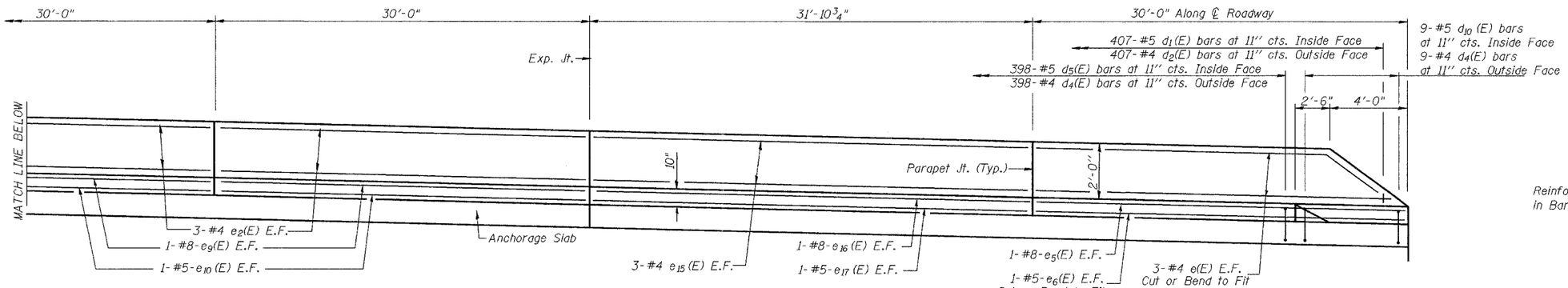

CONCRETE TRAFFIC BARRIER ELEVATION (North Parapet)
MSE WALL NO. 2
(Inside Face Looking North)

NOTE
Reinforcement in parapet included in Bar List on Sh.#13 of 23.

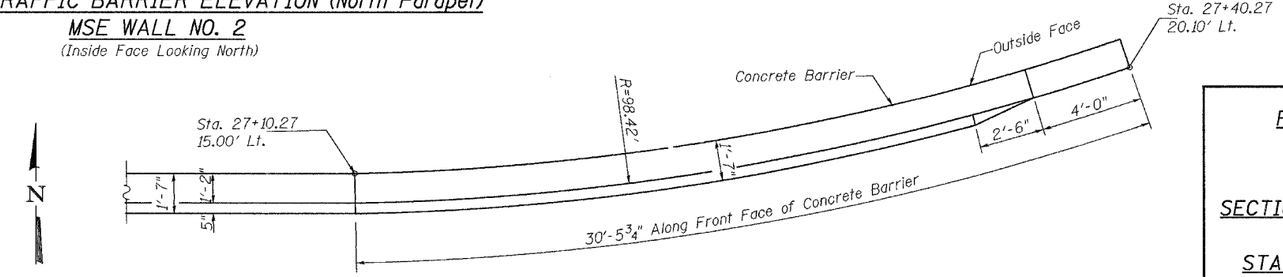

PARTIAL WALL PLAN

DESIGNED	JOH
CHECKED	BRT
DRAWN	TD
CHECKED	JOH

2190b015r

PARAPET JOINT SPACING
MSE WALL NO. 2
FAU ROUTE 6145
SECTION 01-00590-00-BR (COUNTY)
LASALLE COUNTY
STATION 16+66.11 TO 27+40.27

HUTCHISON ENGINEERING, INC.
JACKSONVILLE & JOLIET, ILLINOIS

Date: 3 /10 /2006

F.A.U. RTE.	SECTION	COUNTY	TOTAL SHEETS	SHEET NO.
6145	*	LASALLE	168	140
FED. ROAD DIST. NO. 3	ILLINOIS	FED. AID PROJECT		

* 01-00590-00-BR (County)

CONTRACT NO. 87293

SHEET NO. 19
23 SHEETS

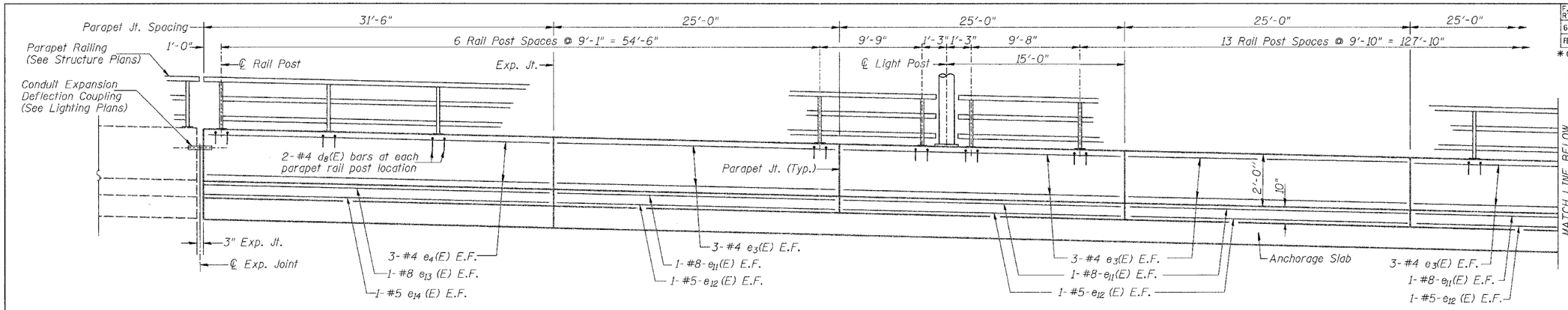

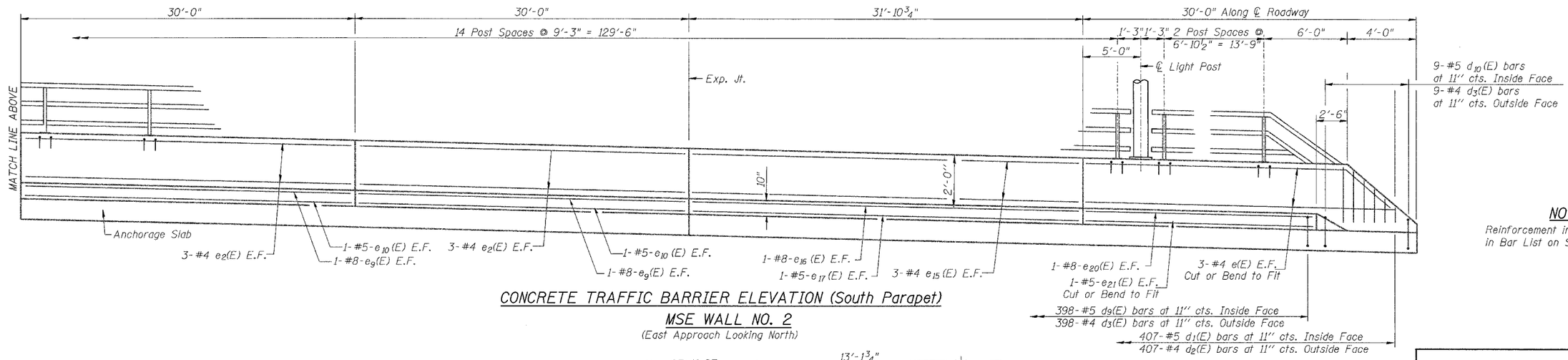

CONCRETE TRAFFIC BARRIER ELEVATION (South Parapet)

MSE WALL NO. 2

(East Approach Looking North)

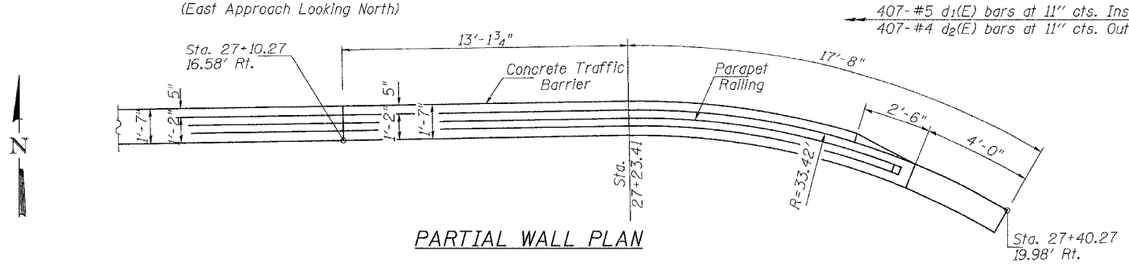

PARTIAL WALL PLAN

NOTE

Reinforcement in parapet included in Bar List on Sh.#13 of 23.

DESIGNED	JOH
CHECKED	BRT
DRAWN	TD
CHECKED	JOH

2190b015r

PARAPET JT. & RAIL POST SPACING
MSE WALL NO. 2
FAU ROUTE 6145
SECTION 01-00590-00-BR (COUNTY)
LASALLE COUNTY
STATION 16+66.11 TO 27+40.27

HUTCHISON ENGINEERING, INC.
JACKSONVILLE & JOLIET, ILLINOIS
Date: 3 /10 /2006

F.A.U. RTE.	SECTION	COUNTY	TOTAL SHEETS	SHEET NO.
6145	*	LASALLE	168	141
FED. ROAD DIST. NO. 3	ILLINOIS	FED. AID PROJECT		

* 01-00590-00-BR (County)

CONTRACT NO. 87293

SHEET NO. 20
23 SHEETS

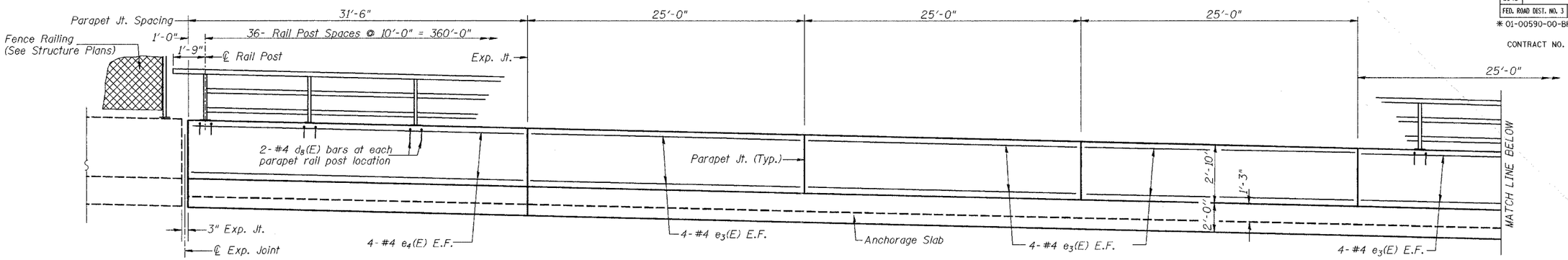

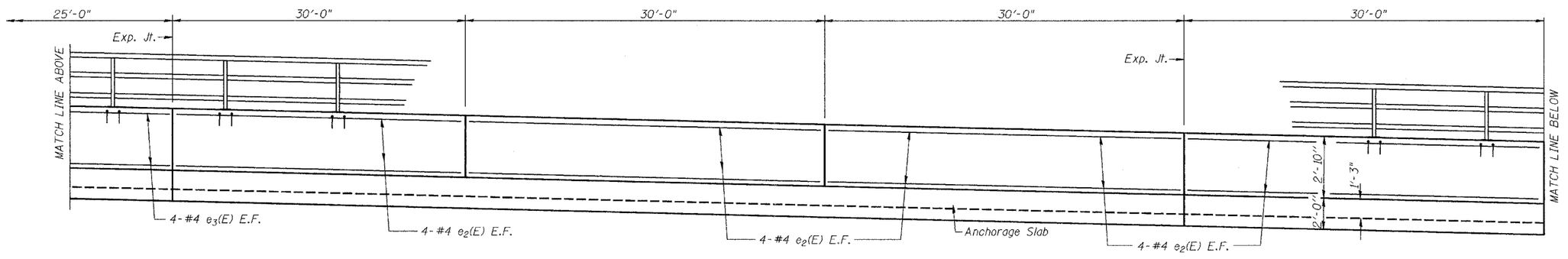

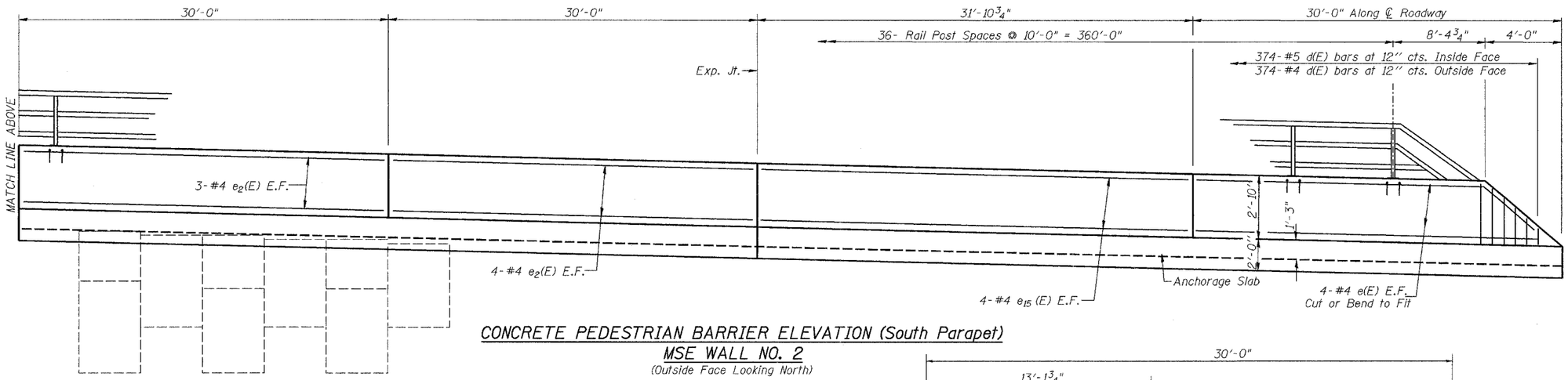

CONCRETE PEDESTRIAN BARRIER ELEVATION (South Parapet)
MSE WALL NO. 2
(Outside Face Looking North)

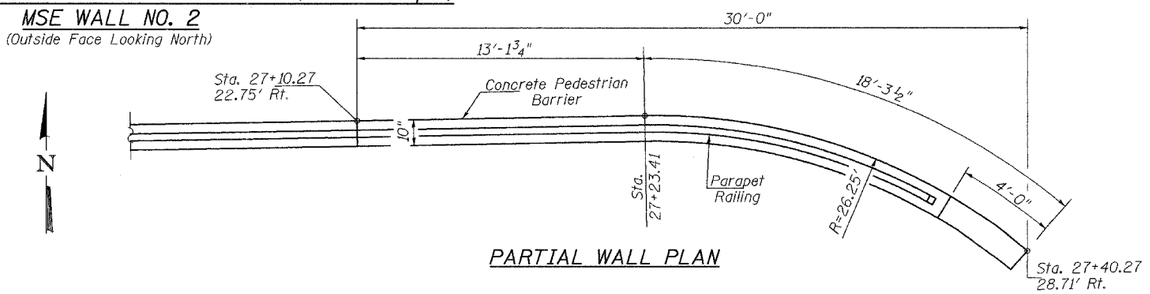

PARTIAL WALL PLAN

NOTE

Reinforcement in parapet included in Bar List on Sh.#13 of 23.

DESIGNED	JOH
CHECKED	BRT
DRAWN	TD
CHECKED	JOH

PARAPET JT. & RAIL POST SPACING
MSE WALL NO. 2
FAU ROUTE 6145
SECTION 01-00590-00-BR (COUNTY)
LASALLE COUNTY
STATION 16+66.11 TO 27+40.27

HUTCHISON ENGINEERING, INC.
JACKSONVILLE & JOLIET, ILLINOIS
Date: 3 /10 /2006

2190b015r

ROUTE NO.	SEC	COUNTY	TOTAL SHEETS	SHEET NO.
FAU 6145	*	LASALLE	168	142
FED. ROAD DIST. NO. 3	ILLINOIS	PROJECT		

SHEET NO. 21
23 SHEETS

* 01-00590-00-BR (County)

CONTRACT NO. 87293

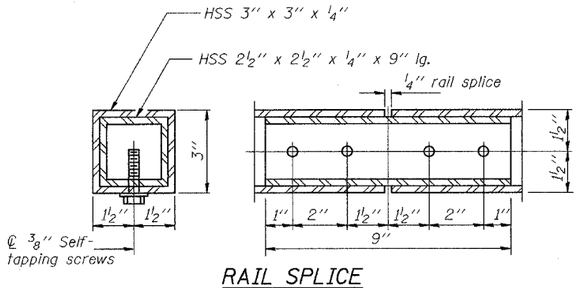

RAIL SPLICE

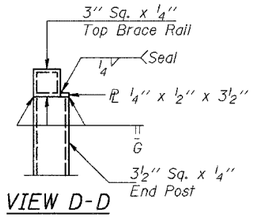

VIEW D-D

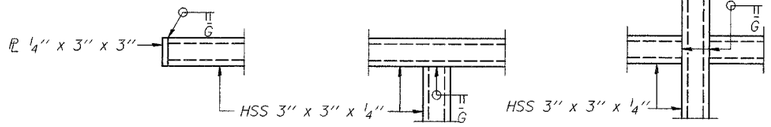

DETAIL A DETAIL B DETAIL C

TYPICAL TUBE WELDS

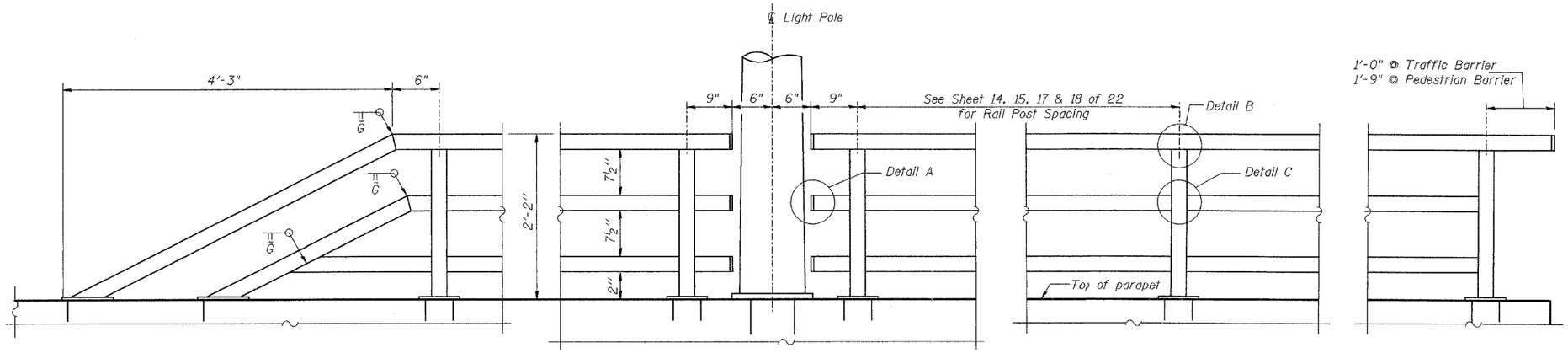

ELEVATION PARAPET RAILING

(Inside Face of Three Element Rail)

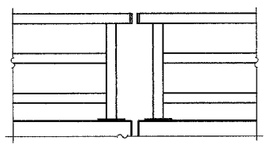

PARAPET RAILING
ELEVATION AT EXPANSION JOINT

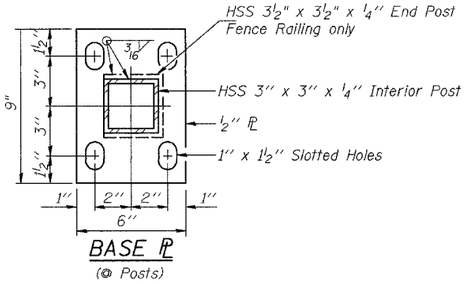

BASE PL

(@ Posts)

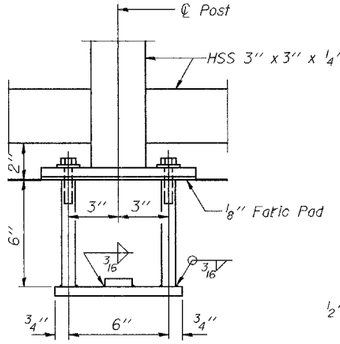

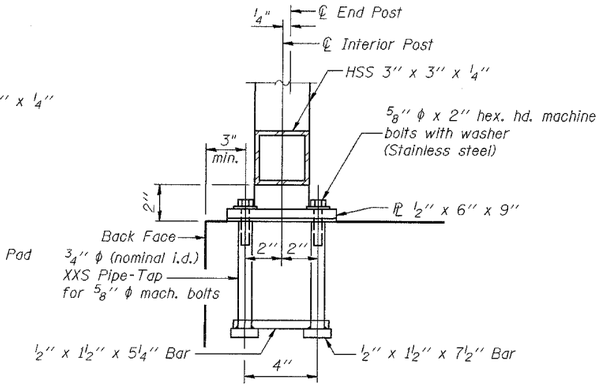

ANCHOR BOLT DETAILS

In lieu of the cat-in-place anchor device shown, the Contractor has te option of drilling and epoxy grouting 5/8'' ϕ anchr rods. Embedment shall be according to the maufacturer's specifications.

NOTES

Railing shall be according to Section 509 of the Standard Specifications, except as noted, and will be paid for at the Contract Unit Price per foot for and Parapet Railing.

Hollow structural sections shall conform to the requirements of ASTM designation A 500, Grade B, structural steel tubing.

All other steel shapes and plates shall conform to the requirements of AASHTO M 270 Grade 36.

If the option of drilling and epoxy grouting the anchor rods is chosen, the Contractor shall use the capsule or the adhesive cartridge type anchor rods that have been previously tested and given a prior approval by the Department. The Contractor shall install these anchor rods in pre-drilled holes according to the manufacturer's recommendations and procedures. The capsule or the adhesive cartridge shall be sealed with pre-measured amounts of the adhesive chemical.

Space reinforcement to miss anchor rods.

All posts, railing, splices, anchor devices, and plates shall be galvanized after shop fabrication according to AASHTO M 111 and ASTM A 385. All bolts, nuts, washers, and anchor rods shall be galvanized according to AASHTO M 232 except stainless steel bolts as noted.

Vent holes for galvanizing shall be placed in the posts and rails at locations that will not allow the accumulation of moisture in the members.

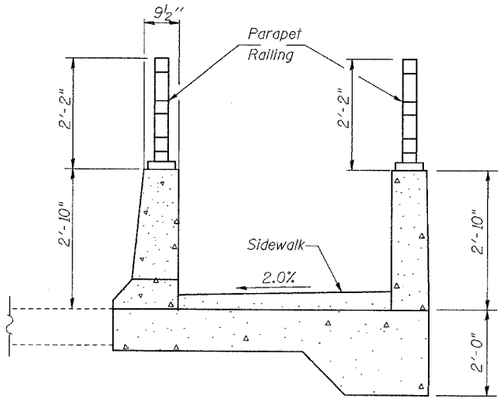

SECTION THRU SIDEWALK

(South Wall)

BILL OF MATERIAL

Item	Unit	Quantity
Parapet Railing	Foot	1,367

DESIGNED	JOH
CHECKED	BRT
DRAWN	TD
CHECKED	JOH

PARAPET RAILING
MSE WALL NO. 1 & 2
FAU ROUTE 6145
SECTION 01-00590-00-BR (COUNTY)
LASALLE COUNTY
STATION 16+66.11 TO 27+40.27

HUTCHISON ENGINEERING, INC.
JACKSONVILLE & JOLIET, ILLINOIS
Date: 3 /10 /2006

2190b021r

ROUTE NO.	SEC	COUNTY	TOTAL SHEETS	SHEET NO.
FAU 6145	*	LASALLE	168	143
FED. ROAD DIST. NO. 3	ILLINOIS	PROJECT		

* 01-00590-00-BR (County)

SHEET NO. 22
23 SHEETS

CONTRACT NO. 87293

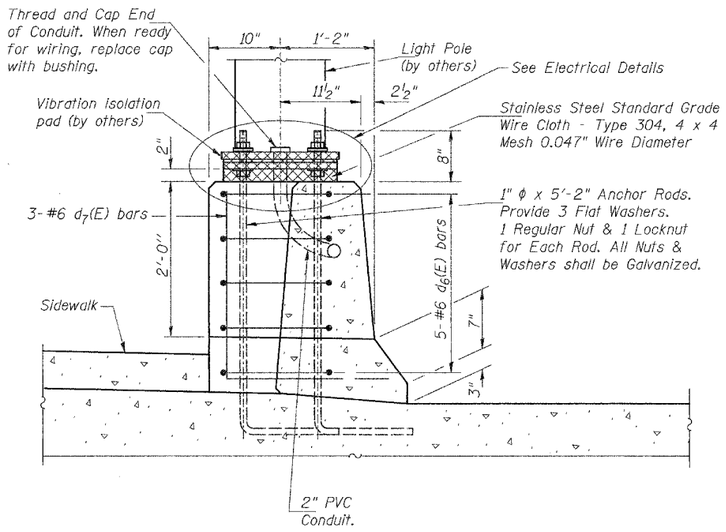

SECTION A-A

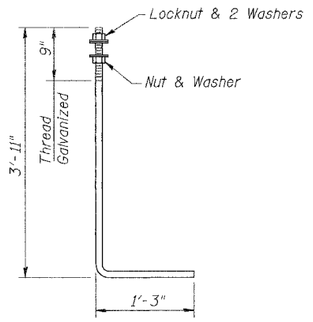

1" ϕ ANCHOR ROD
(ASTM F 1554 Grade 105)

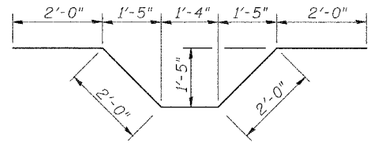

BAR d6(E)

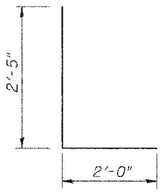

BAR d7(E)

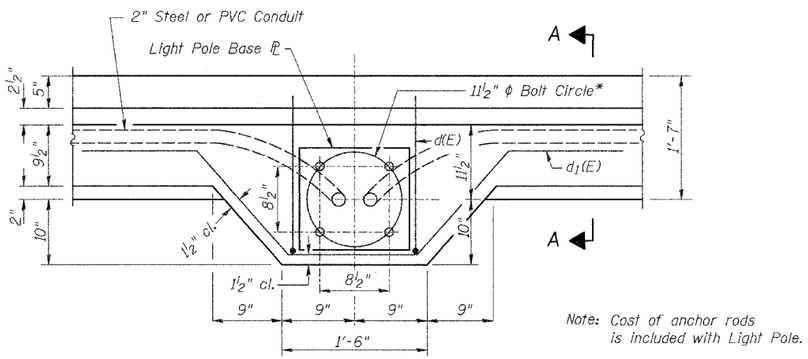

Note: Cost of anchor rods is included with Light Pole.

LIGHT POLE MOUNTING PLAN
* Match Light Pole Manufacturer Requirements.

LIGHT FIXTURE LOCATION

Location	Station	Offset
Wall No. 1	16+91.10	16.58' Rt.
Wall No. 1	18+14.62	16.58' Rt.
Wall No. 1	19+34.62	16.58' Rt.
Wall No. 2	24+33.37	16.58' Rt.
Wall No. 2	25+73.37	16.58' Rt.
Wall No. 2	27+15.27	16.58' Rt.

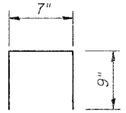

BAR d8(E)

DESIGNED	JOH
CHECKED	BRT
DRAWN	TD
CHECKED	JOH

LIGHTING DETAILS
MSE WALL NO. 1 & 2
FAU ROUTE 6145
SECTION 01-00590-00-BR (COUNTY)
LASALLE COUNTY
STATION 16+66.11 TO 27+40.27

HUTCHISON ENGINEERING, INC.
JACKSONVILLE & JOLIET, ILLINOIS
Date: 3 /10 /2006

2190b022r

F.A.U. RTE.	SECTION	COUNTY	TOTAL SHEETS	SHEET NO.
6145	*	LASALLE	168	144
FED. ROAD DIST. NO. 3	ILLINOIS	FED. AID PROJECT		

* 01-00590-00-BR (County)

SHEET NO. 23
23 SHEETS

CONTRACT NO. 87293

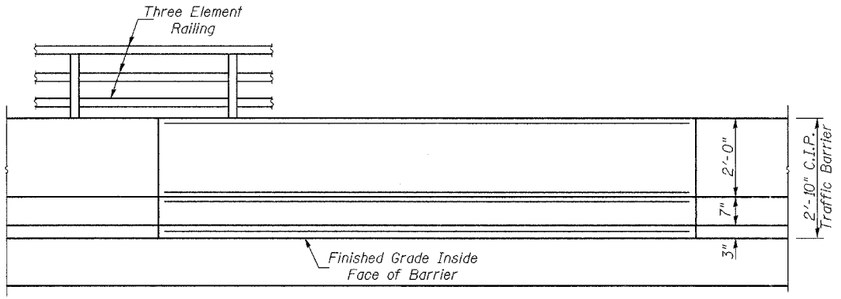

PARAPET ELEVATION
(Traffic Barrier)

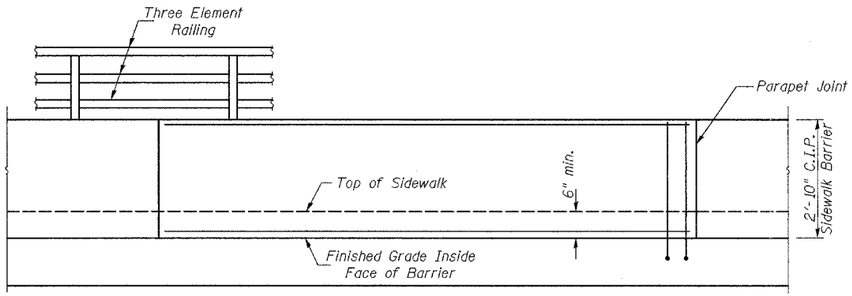

PARAPET ELEVATION
(Sidewalk Barrier)

PLAN - SHOULDER SLAB & CONCRETE BARRIER
(South Side)

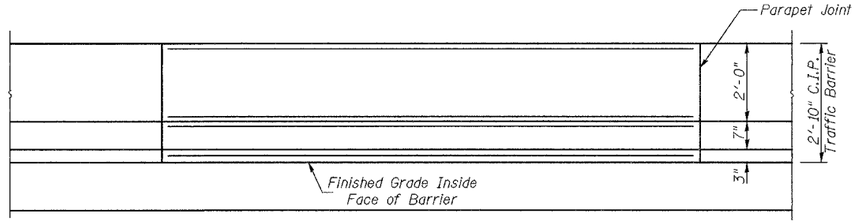

PARAPET ELEVATION
(Traffic Barrier)

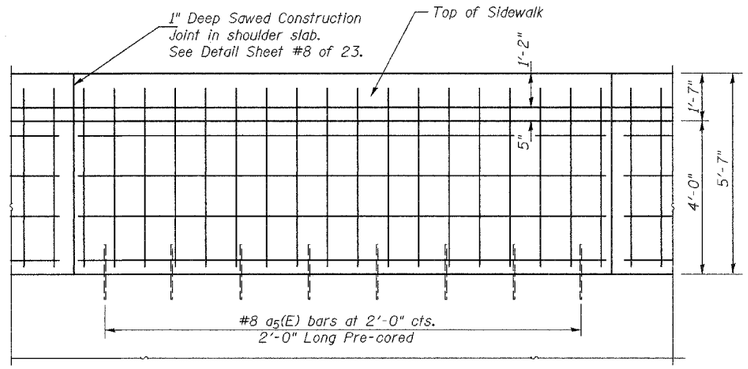

PLAN - SHOULDER SLAB & CONCRETE BARRIER
(North Side)

DESIGNED	JOH
CHECKED	BRT
DRAWN	TC & TD
CHECKED	JOH

2190b023r

SHOULDER SLAB & PARAPET DETAILS
MSE WALL NO. 1 & 2
FAU ROUTE 6145
SECTION 01-00590-00-BR (COUNTY)
LASALLE COUNTY
STATION 16+66.11 TO 27+40.27

HUTCHISON ENGINEERING, INC.
JACKSONVILLE & JOLIET, ILLINOIS

Date: 3 /10 /2006

F.A.U. RTE.	SECTION	COUNTY	TOTAL SHEETS	SHEET NO.
6145	01-00590-00-BR	LaSALLE	168	145
STA. 15+00		TO STA. 16+25		
FED. ROAD DIST. NO. 3	ILLINOIS	FED. AID PROJECT		

CONTRACT NO. 87293

SECTION 01-00590-00-BR
BEGINS
STATION 15+20.00

C. FILL (F) = 0 SQ. FT.
CUT (C) = 0 SQ. FT.

F.A.U. RTE.	SECTION	COUNTY	TOTAL SHEETS	SHEET NO.
6145	01-00590-00-BR	LaSALLE	168	146
STA. 16+50		TO STA. 17+60.6		
FED. ROAD DIST. NO. 3	ILLINOIS	FED. AID PROJECT		

CONTRACT NO. 87293

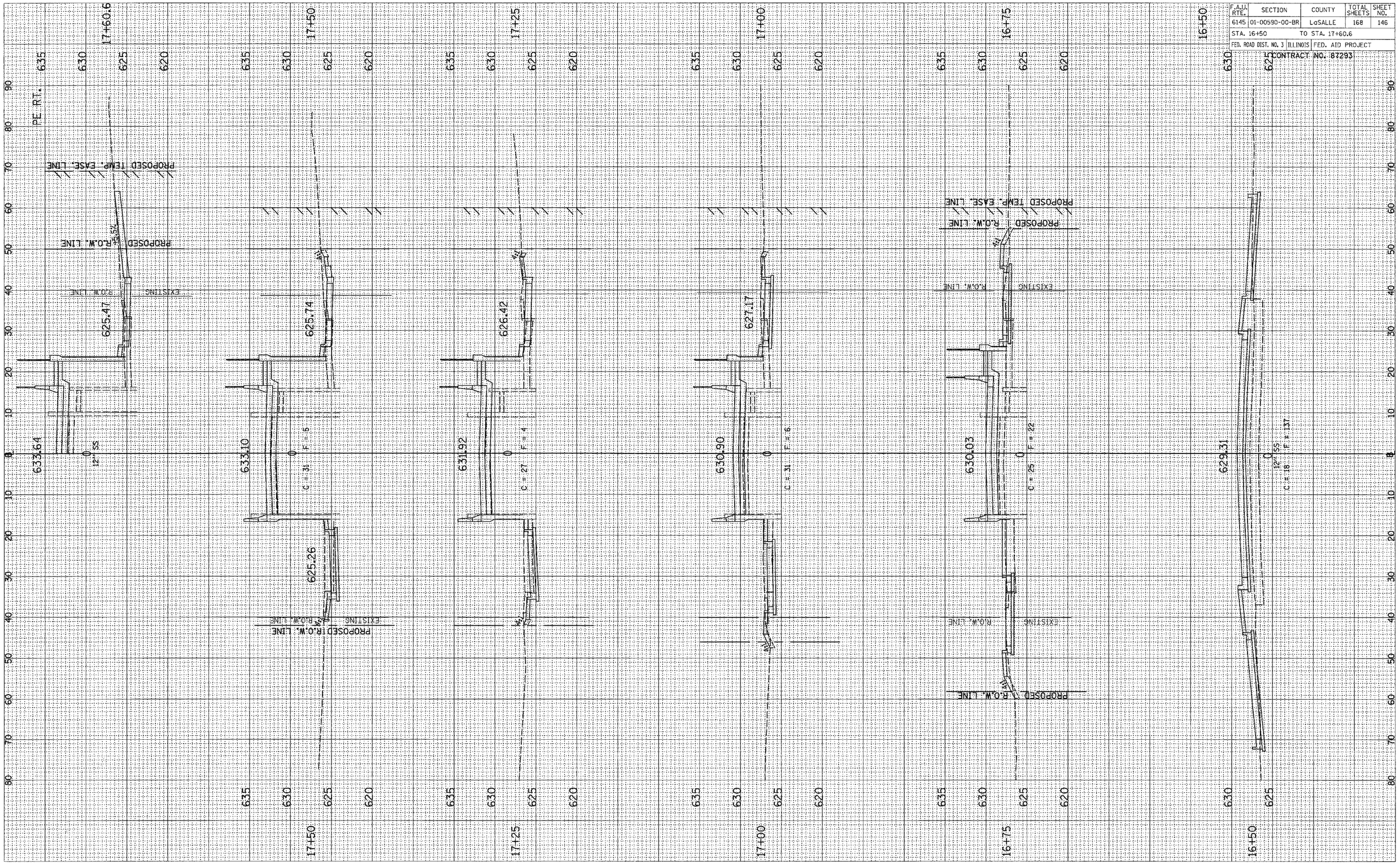

F.A.U. RTE.	SECTION	COUNTY	TOTAL SHEETS	SHEET NO.
6145	01-00590-00-BR	LaSALLE	168	147
STA. 17+67.4		TO STA. 18+09.3		
FED. ROAD DIST. NO. 3	ILLINOIS	FED. AID PROJECT		

CONTRACT NO. 87293

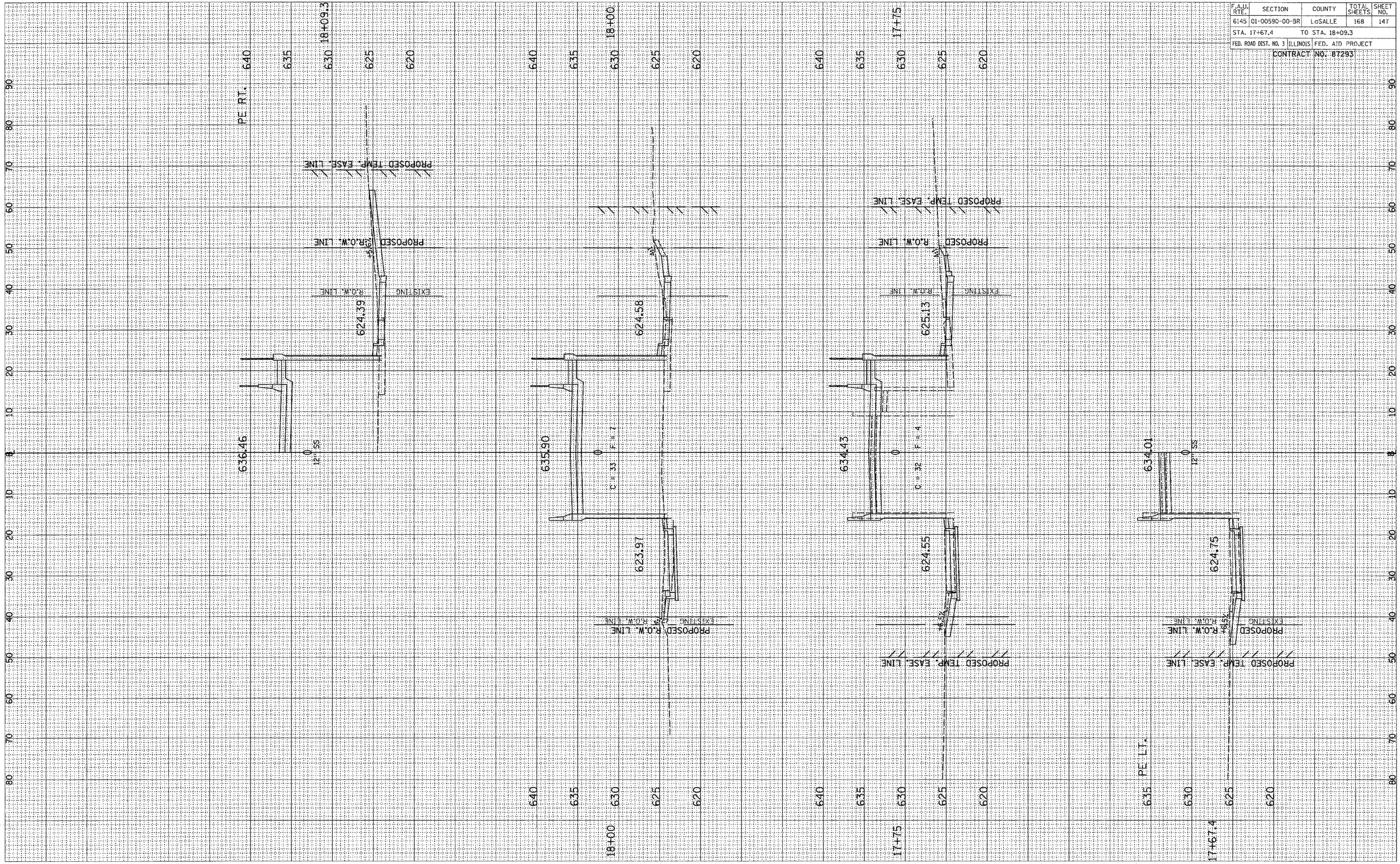

F.A.U. RTE.	SECTION	COUNTY	TOTAL SHEETS	SHEET NO.
6145	01-00590-00-BR	LaSALLE	168	148
STA. 18+25		TO STA. 18+87.4		
FED. ROAD DIST. NO. 3	ILLINOIS	FED. AID PROJECT		

CONTRACT NO. 87293

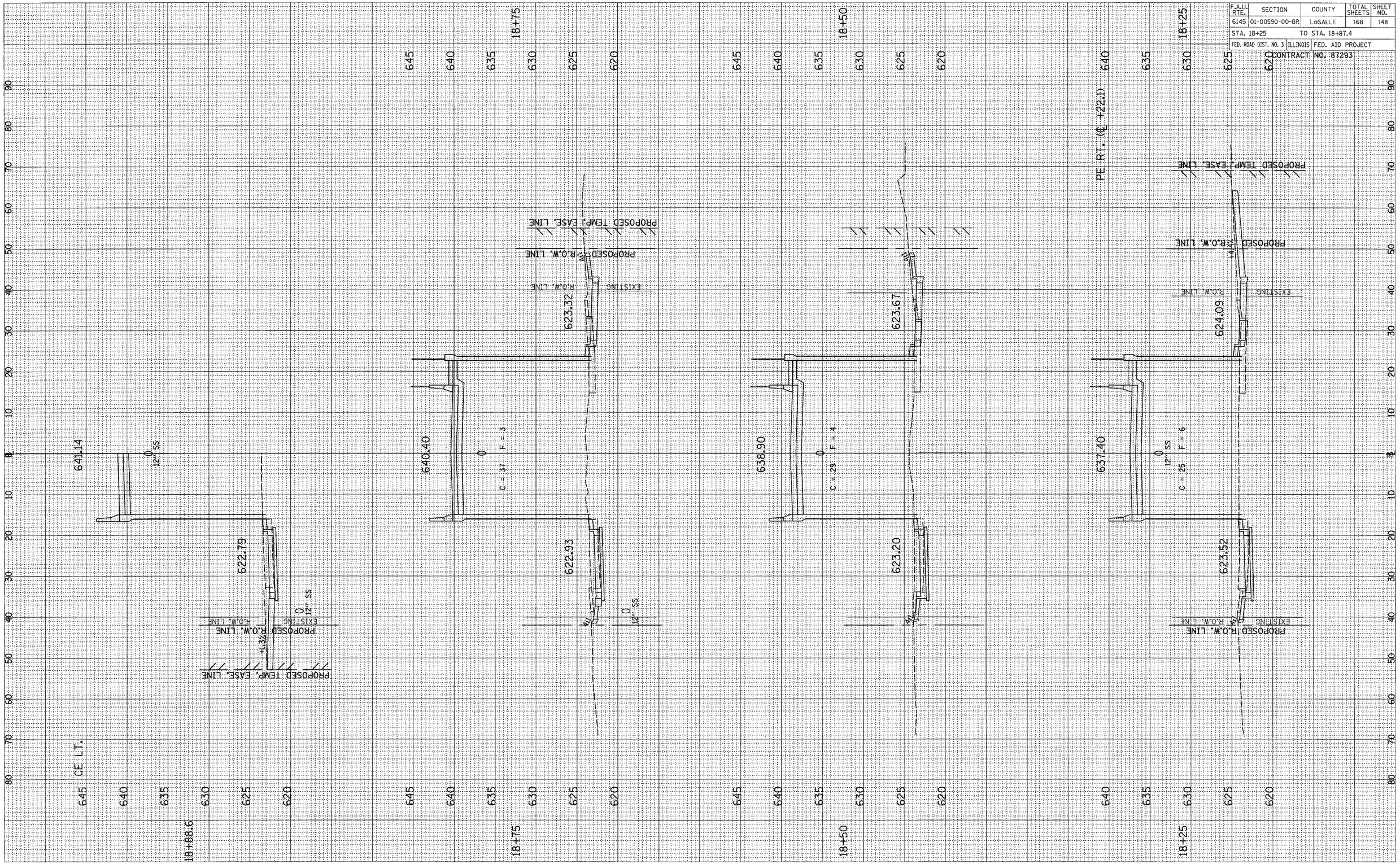

F.A.U. RTE.	SECTION	COUNTY	TOTAL SHEETS	SHEET NO.
6145	01-00590-00-BR	LaSALLE	168	149
STA. 19+00		TO STA. 19+50		
FED. ROAD DIST. NO. 3	ILLINOIS	FED. AID PROJECT		

CONTRACT NO. 87293

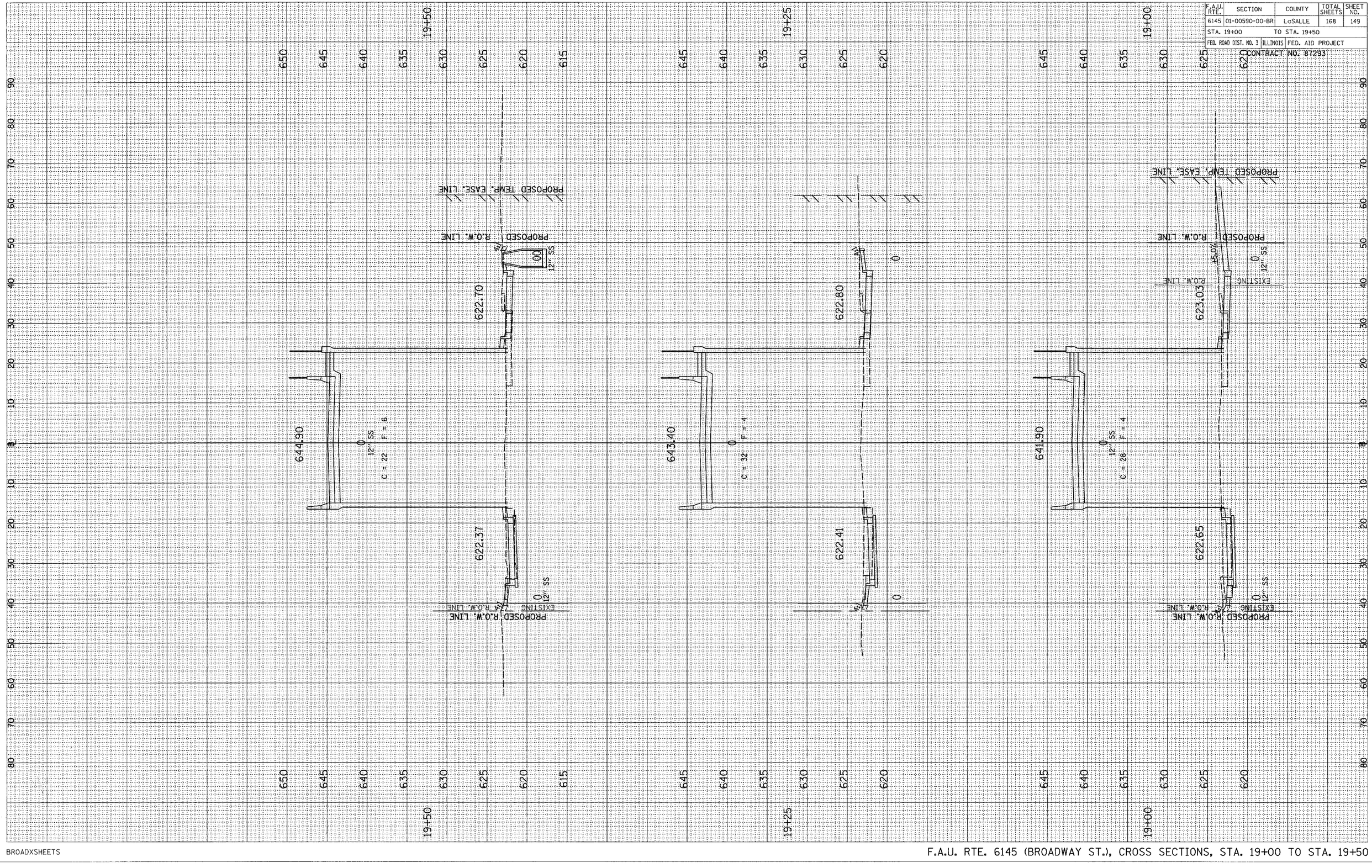

F.A.U. RTE.	SECTION	COUNTY	TOTAL SHEETS	SHEET NO.
6145	01-00590-00-BR	LaSALLE	168	150
STA. 19+75	TO STA. 20+25			
FED. ROAD DIST. NO. 3	ILLINOIS	FED. AID PROJECT		

CONTRACT NO. 87293

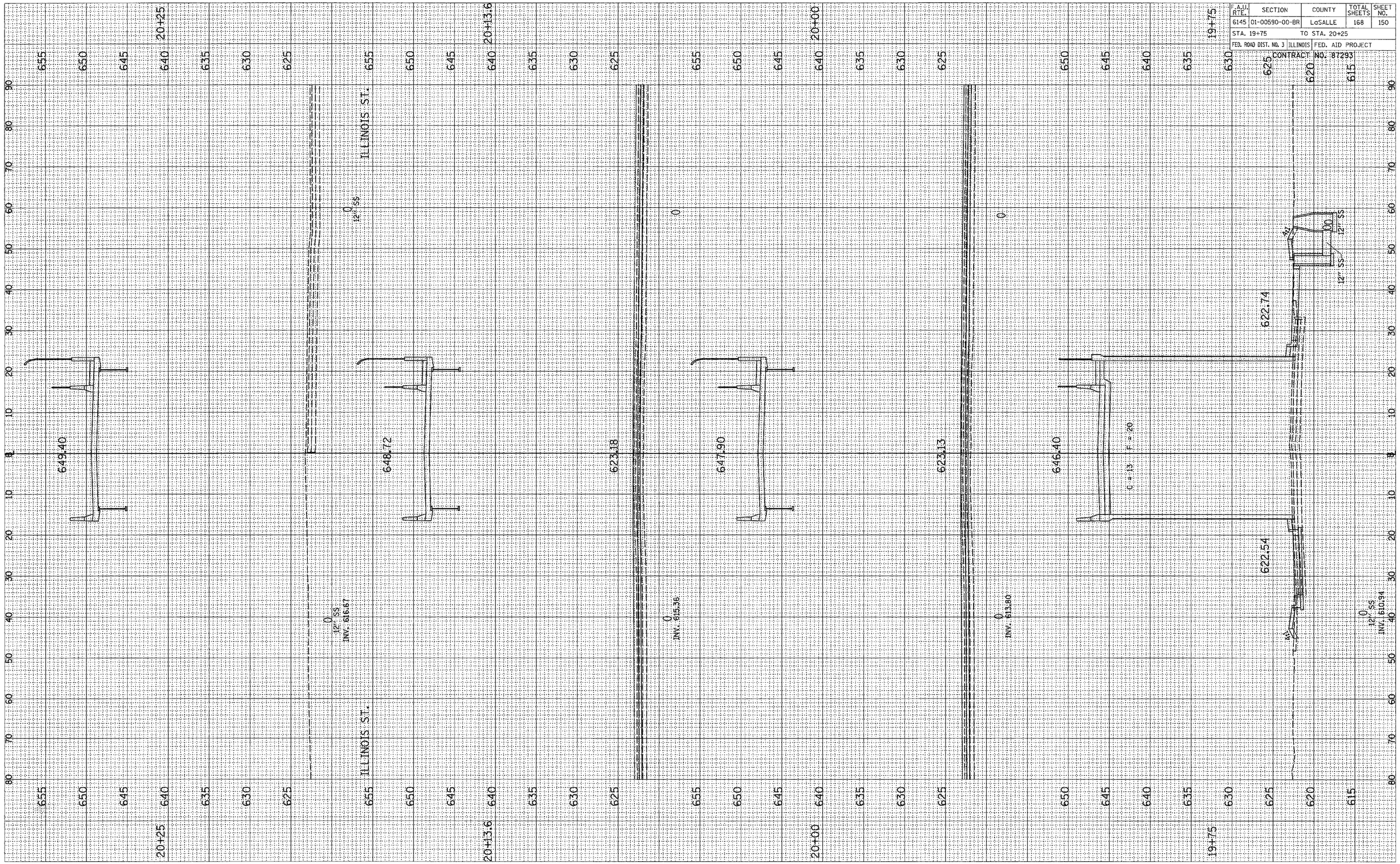

F.A.U. RTE.	SECTION	COUNTY	TOTAL SHEETS	SHEET NO.
6145	01-00590-00-BR	LaSALLE	168	151
STA. 20+50		TO STA. 21+00		
FED. ROAD DIST. NO. 3	ILLINOIS	FED. AID PROJECT		

CONTRACT NO. 87293

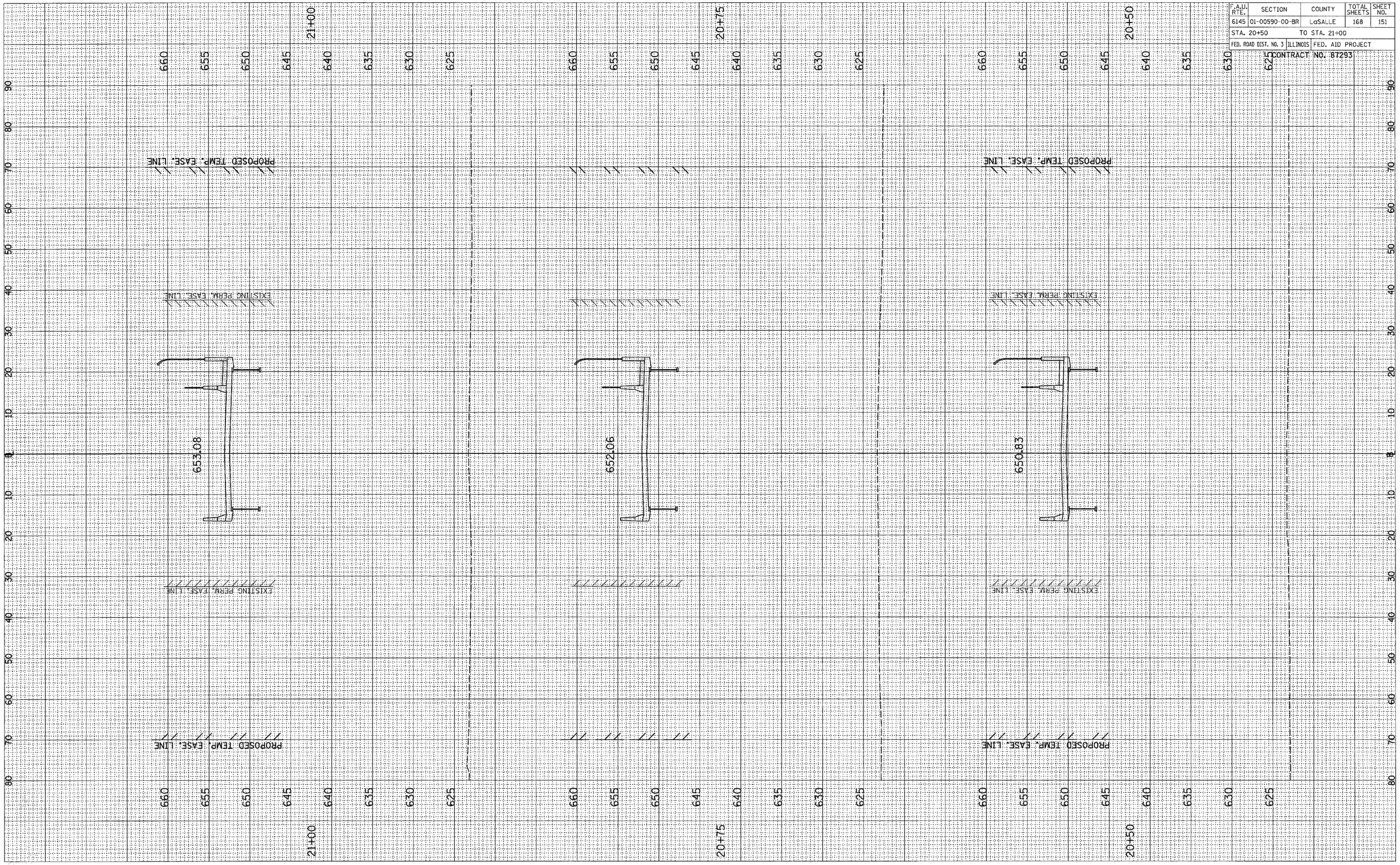

F.A.U. RTE.	SECTION	COUNTY	TOTAL SHEETS	SHEET NO.
6145	01-00590-00-BR	LaSALLE	168	152
STA. 21+25		TO STA. 21+75		
FED. ROAD DIST. NO. 3	ILLINOIS	FED. AID PROJECT		

CONTRACT NO. 87293

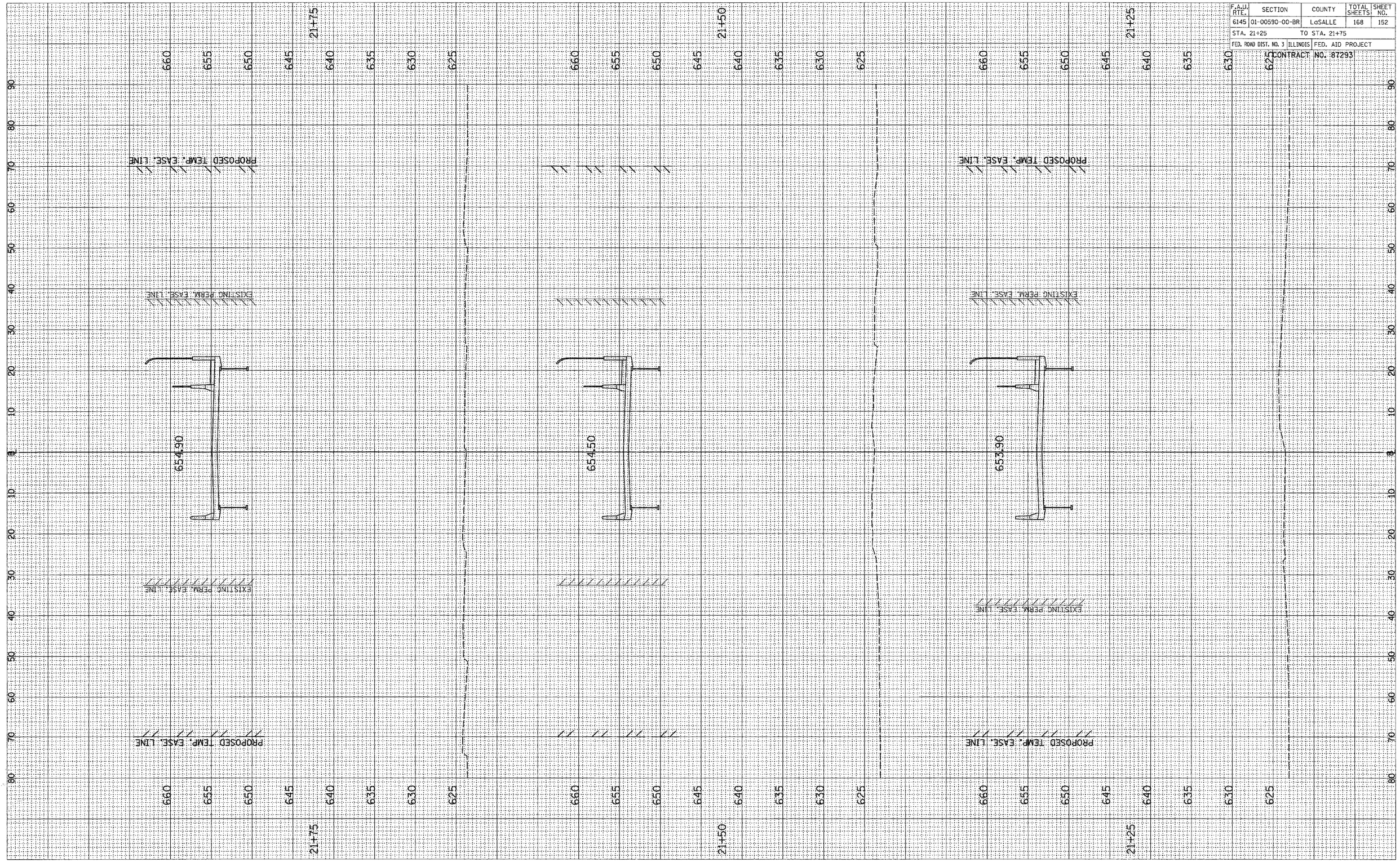

F.A.U. RTE.	SECTION	COUNTY	TOTAL SHEETS	SHEET NO.
6145	01-00590-00-BR	LaSALLE	168	153
STA. 22+00		TO STA. 22+50		
FED. ROAD DIST. NO. 3	ILLINOIS	FED. AID PROJECT		

CONTRACT NO. 87293

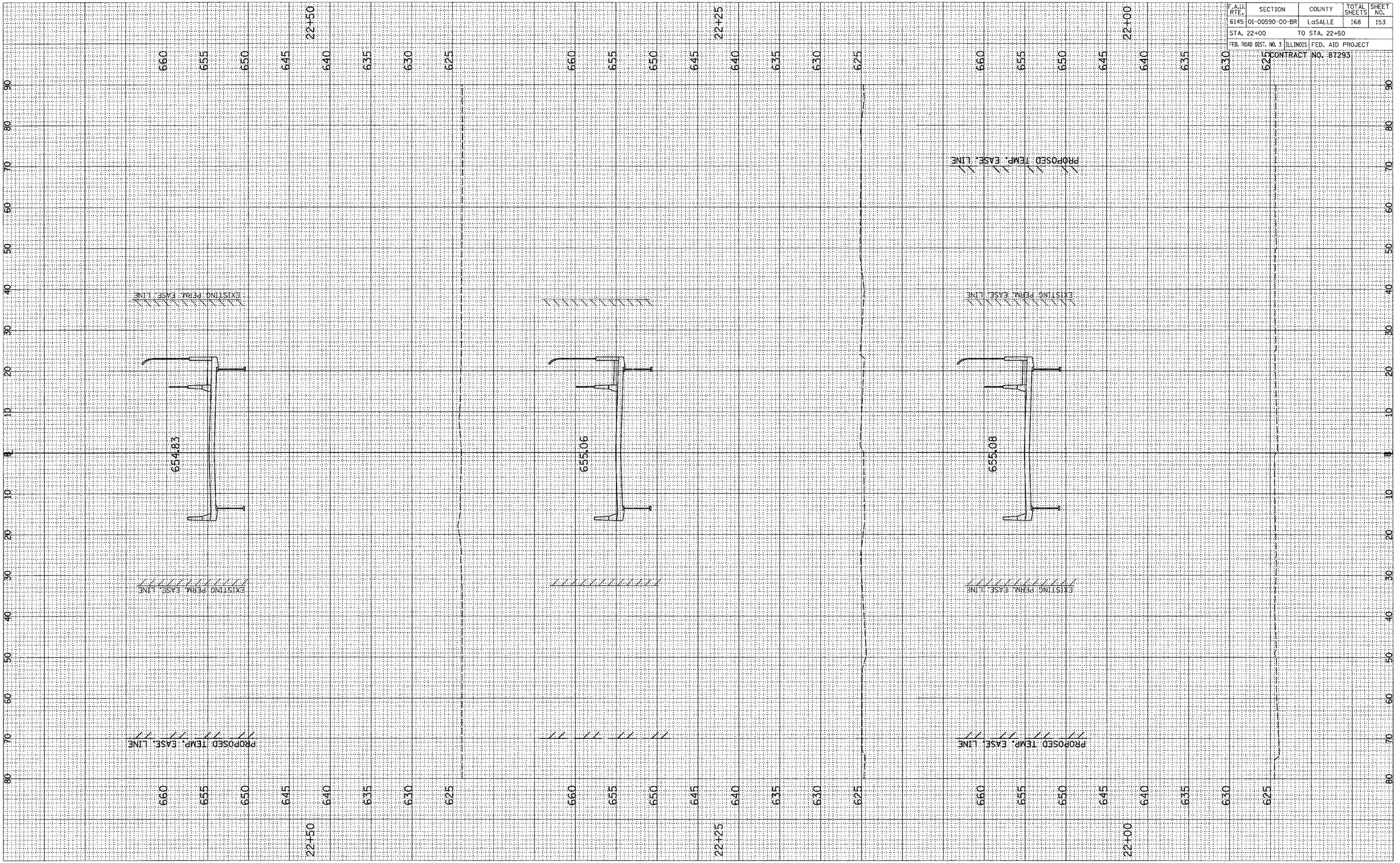

F.A.U. RTE.	SECTION	COUNTY	TOTAL SHEETS	SHEET NO.
6145	01-00590-00-BR	LaSALLE	168	154
STA. 22+75		TO STA. 23+25		
FED. ROAD DIST. NO. 3	ILLINOIS	FED. AID PROJECT		

CONTRACT NO. 87293

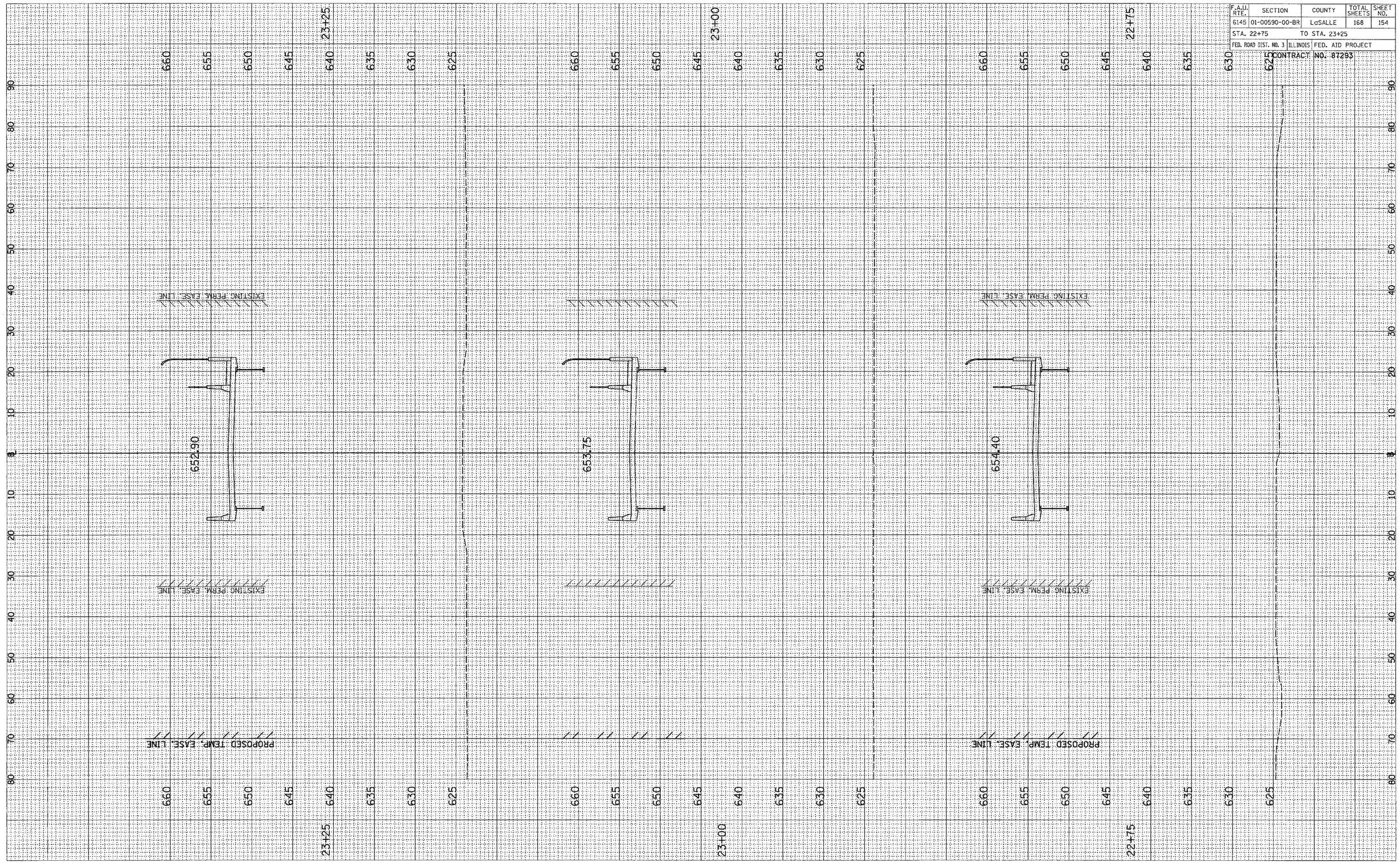

F.A.U. RTE.	SECTION	COUNTY	TOTAL SHEETS	SHEET NO.
6145	01-00590-00-BR	LaSALLE	168	155
STA. 23+50		TO STA. 24+00		
FED. ROAD DIST. NO. 3	ILLINOIS	FED. AID PROJECT		

CONTRACT NO. 87293

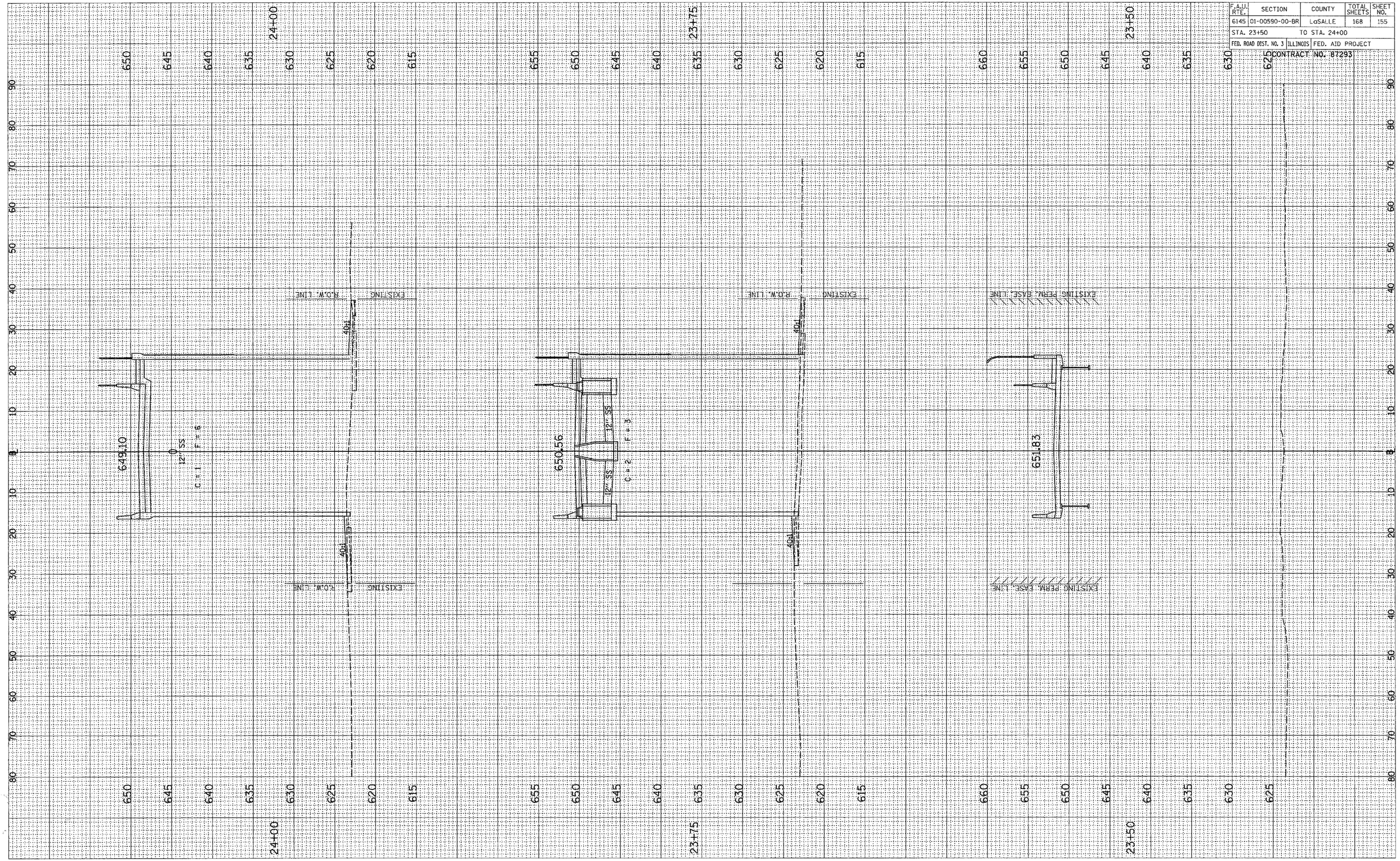

F.A.U. RTE.	SECTION	COUNTY	TOTAL SHEETS	SHEET NO.
6145	01-00590-00-BR	LaSALLE	168	156
STA. 24+25		TO STA. 24+75		
FED. ROAD DIST. NO. 3	ILLINOIS	FED. AID PROJECT		

CONTRACT NO. 87293

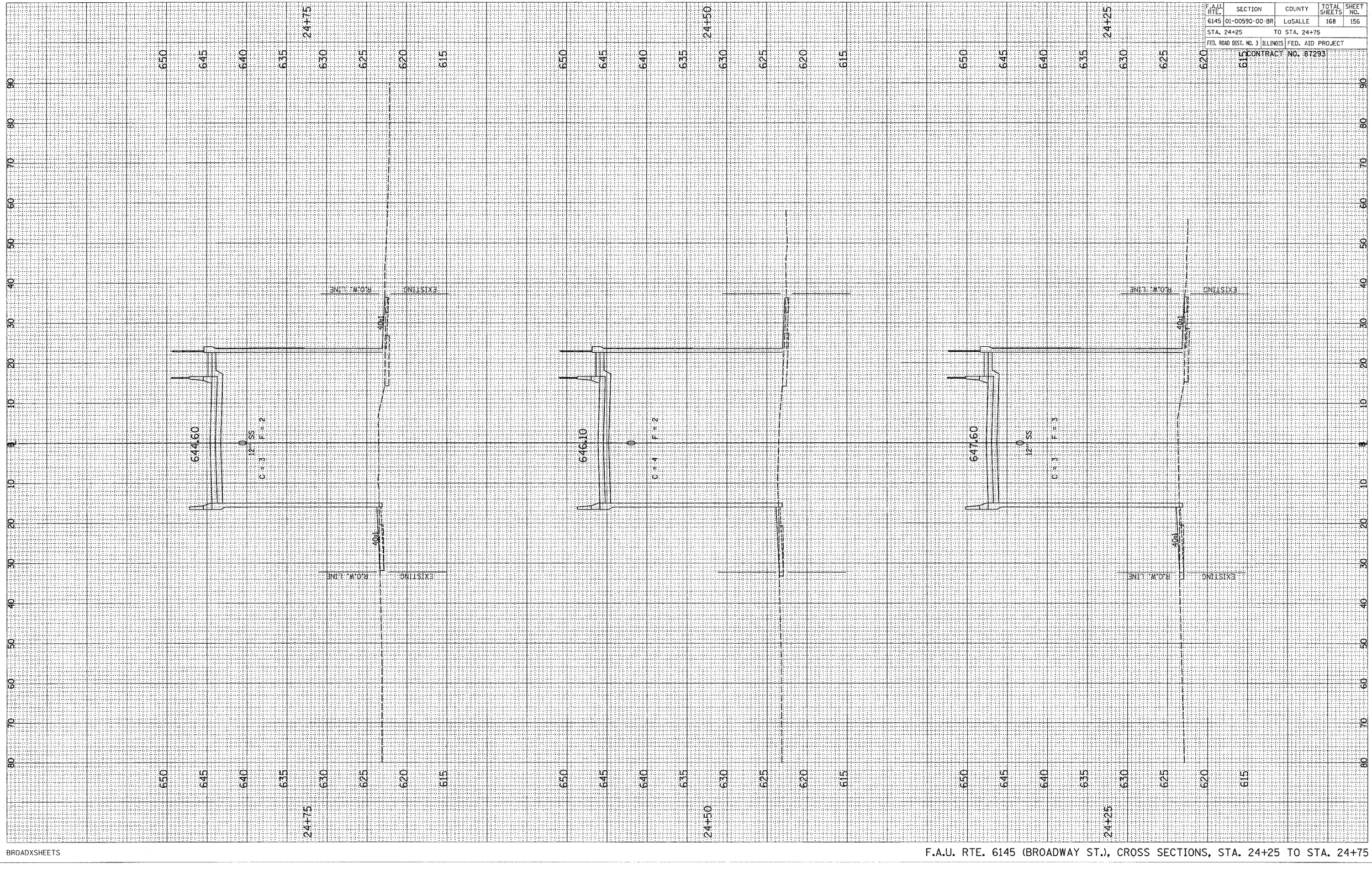

F.A.U. RTE.	SECTION	COUNTY	TOTAL SHEETS	SHEET NO.
6145	01-00590-00-BR	LaSALLE	168	157
STA. 25+00	TO STA. 25+50			
FED. ROAD DIST. NO. 3	ILLINOIS	FED. AID PROJECT		

CONTRACT NO. 87293

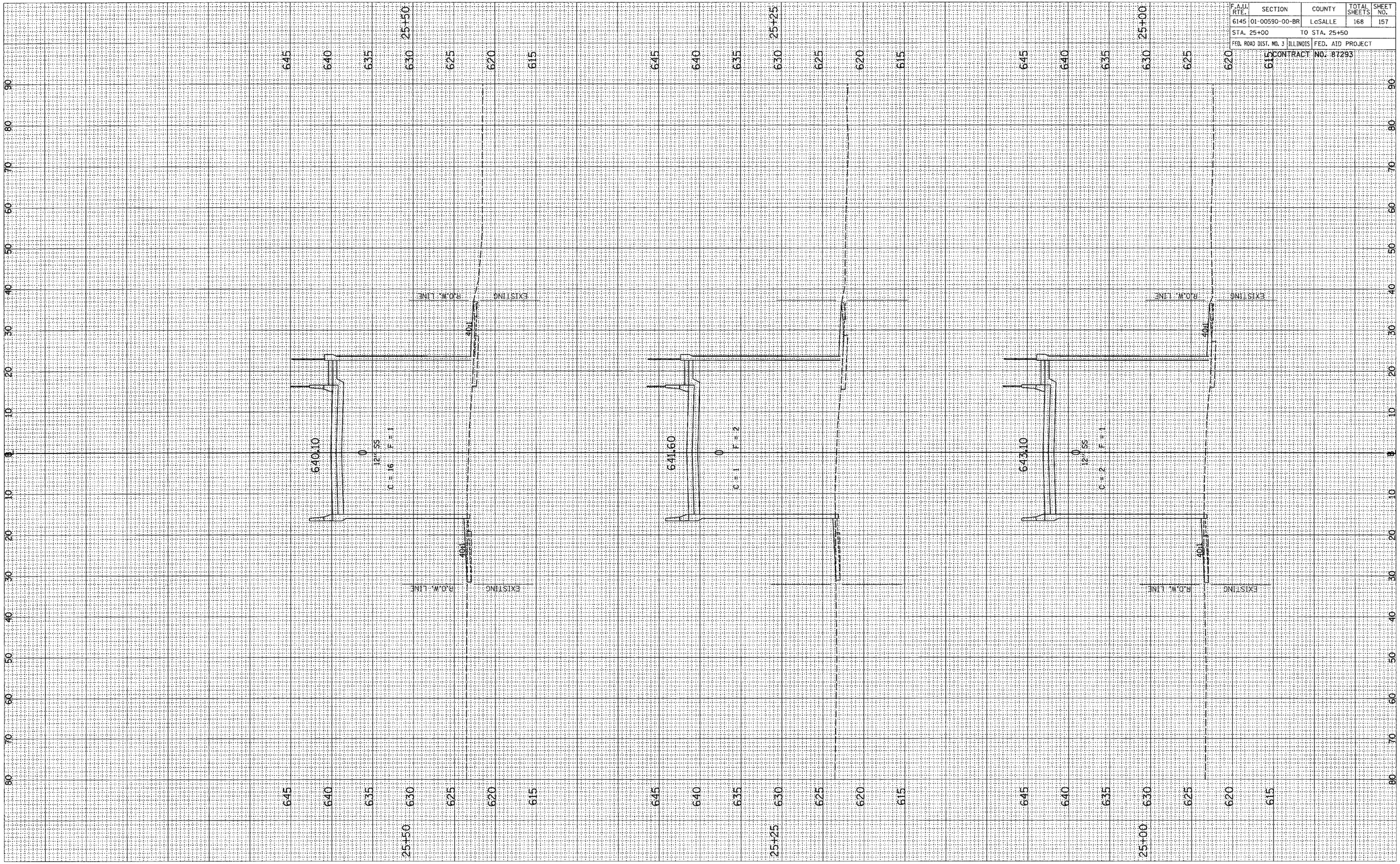

F.A.U. RTE.	SECTION	COUNTY	TOTAL SHEETS	SHEET NO.
6145	01-00590-00-BR	LaSALLE	168	158
STA. 25+75		TO STA. 26+75		
FED. ROAD DIST. NO. 3	ILLINOIS	FED. AID PROJECT		

CONTRACT NO. 87293

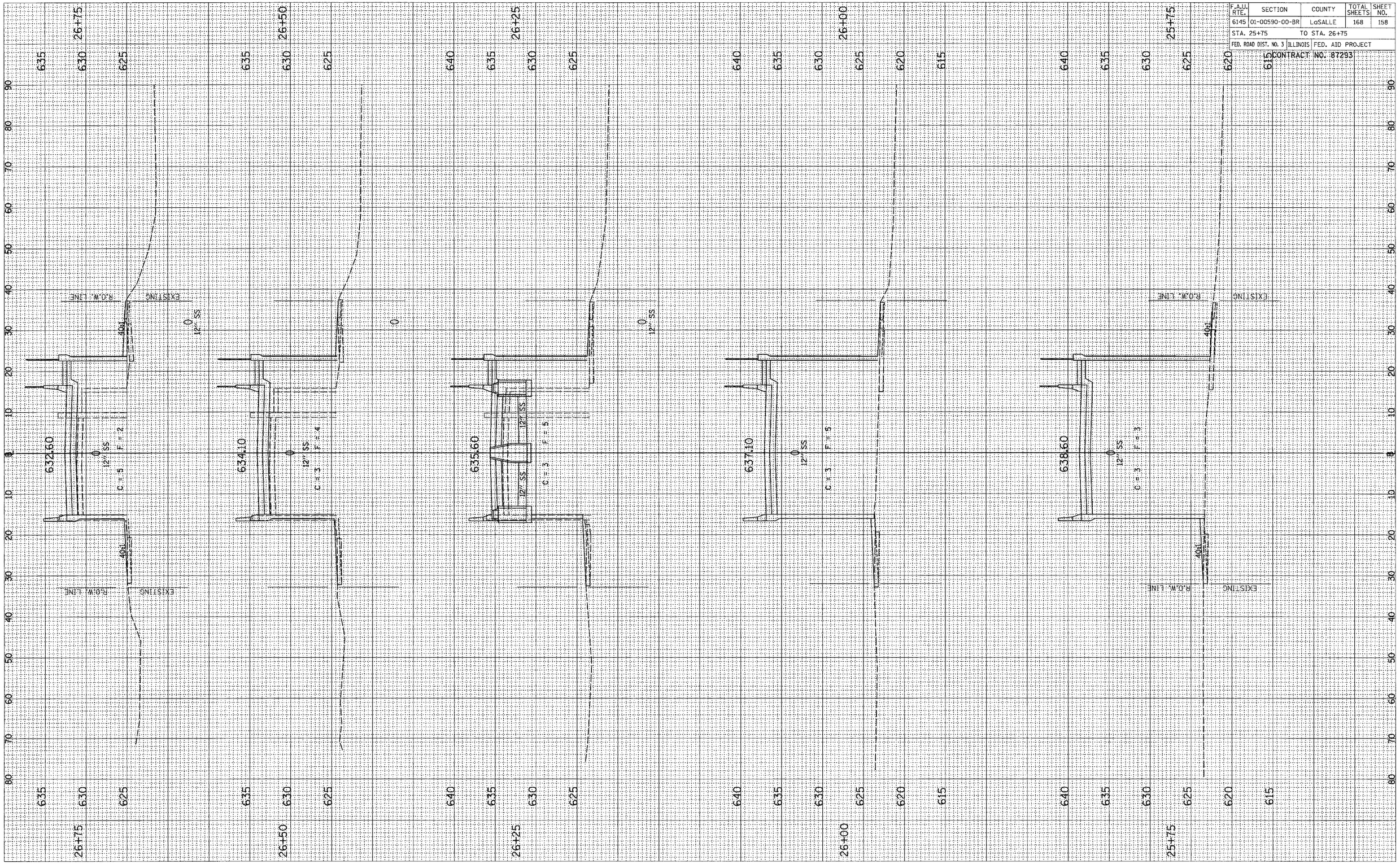

F.A.U. RTE.	SECTION	COUNTY	TOTAL SHEETS	SHEET NO.
6145	01-00590-00-BR	LaSALLE	168	159
STA. 27+00	TO STA. 28+25			
FED. ROAD DIST. NO. 3	ILLINOIS	FED. AID PROJECT		

CONTRACT NO. 87293

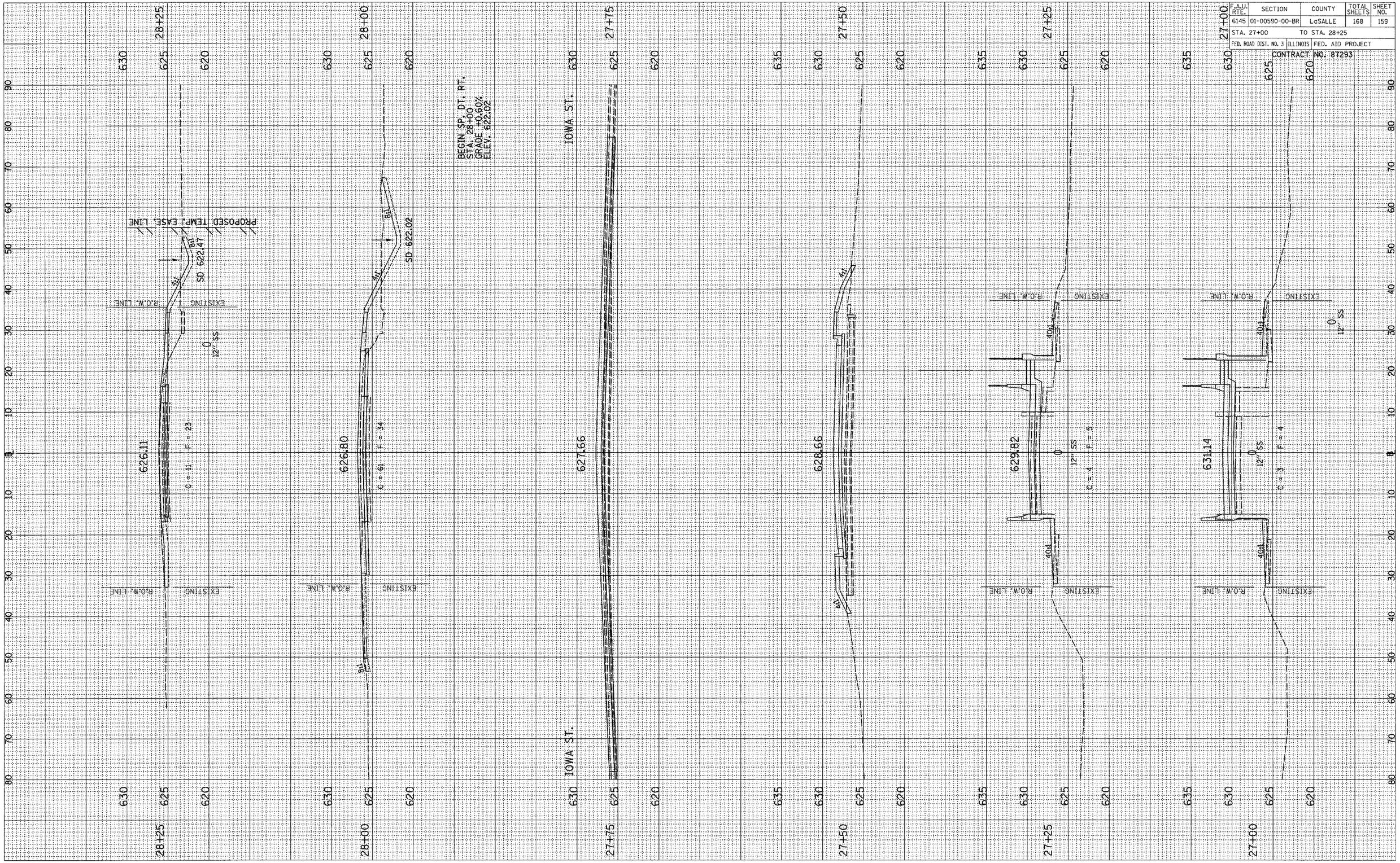

F.A.U. RTE.	SECTION	COUNTY	TOTAL SHEETS	SHEET NO.
6145	01-00590-00-BR	LaSALLE	168	160
STA. 28+50		TO STA. 29+50		
FED. ROAD DIST. NO. 3	ILLINOIS	FED. AID PROJECT		

CONTRACT NO. 87293

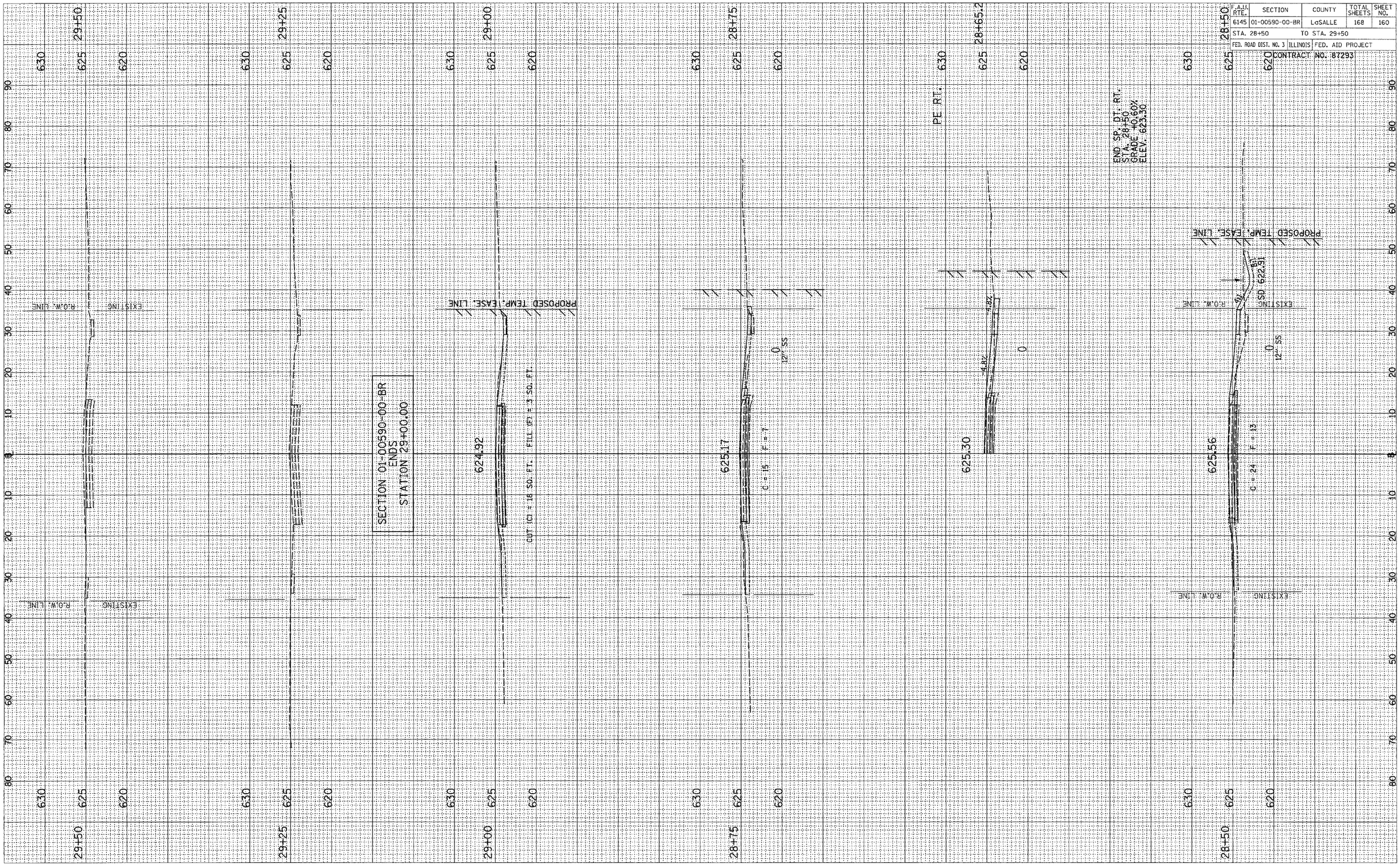

BROADXSHEETS

F.A.U. RTE. 6145 (BROADWAY ST.), CROSS SECTIONS, STA. 28+50 TO STA. 29+50

F.A.S. RTE.	SECTION	COUNTY	TOTAL SHEETS	SHEET NO.
N/A	01-00590-00-BR	LaSALLE	168	161
STA. 68+00		TO STA. 68+57.3		
FED. ROAD DIST. NO. 3	ILLINOIS	FED. AID PROJECT		

CONTRACT NO. 87293

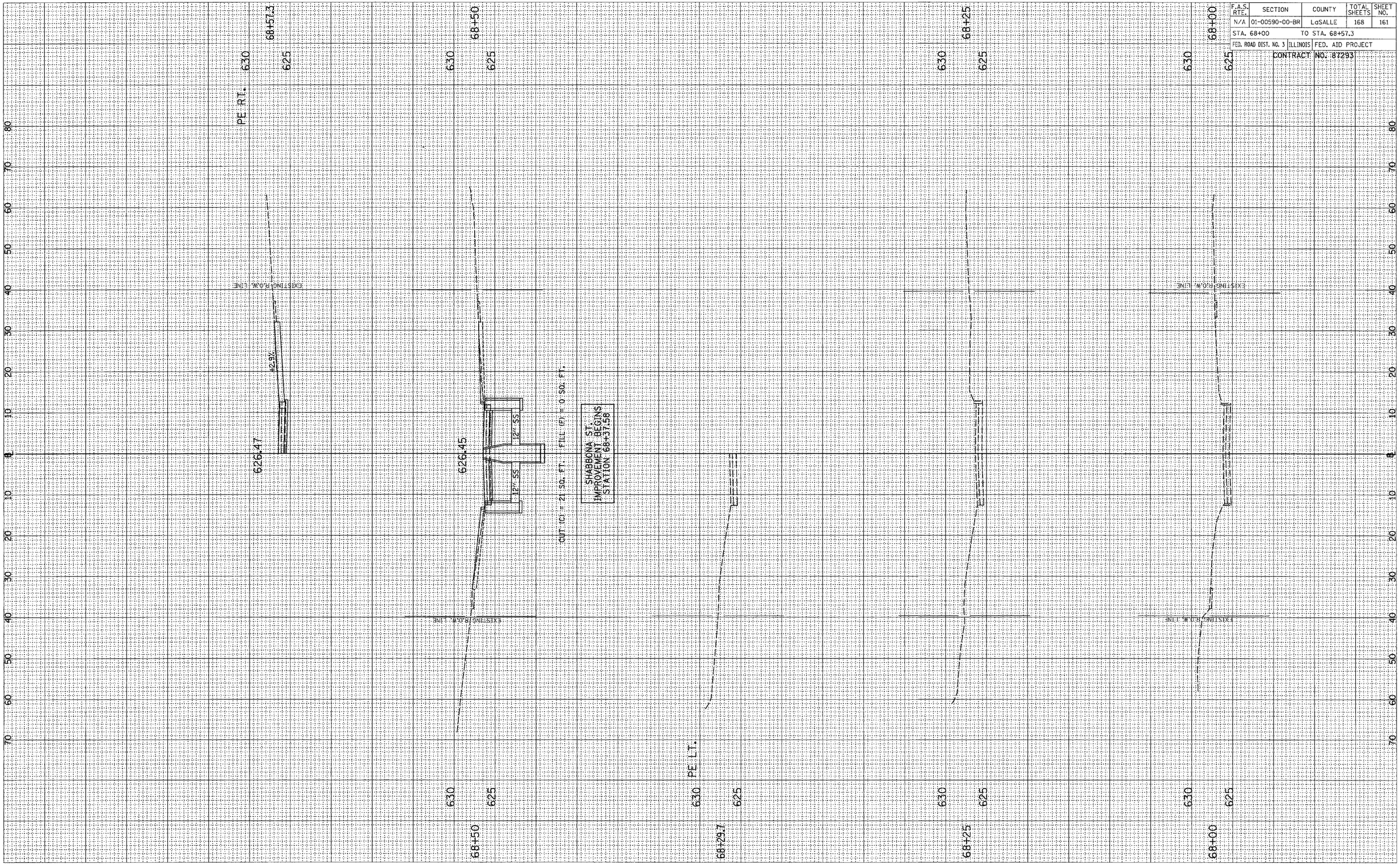

SHABXSHEETS

SHABBONA ST., CROSS SECTIONS, STA. 68+00 TO STA. 68+57.3

F.A.S. RTE.	SECTION	COUNTY	TOTAL SHEETS	SHEET NO.
N/A	01-00590-00-BR	LaSALLE	168	162
STA. 68+62.4		TO STA. 69+50		
FED. ROAD DIST. NO. 3	ILLINOIS	FED. AID PROJECT		

CONTRACT NO. 87293

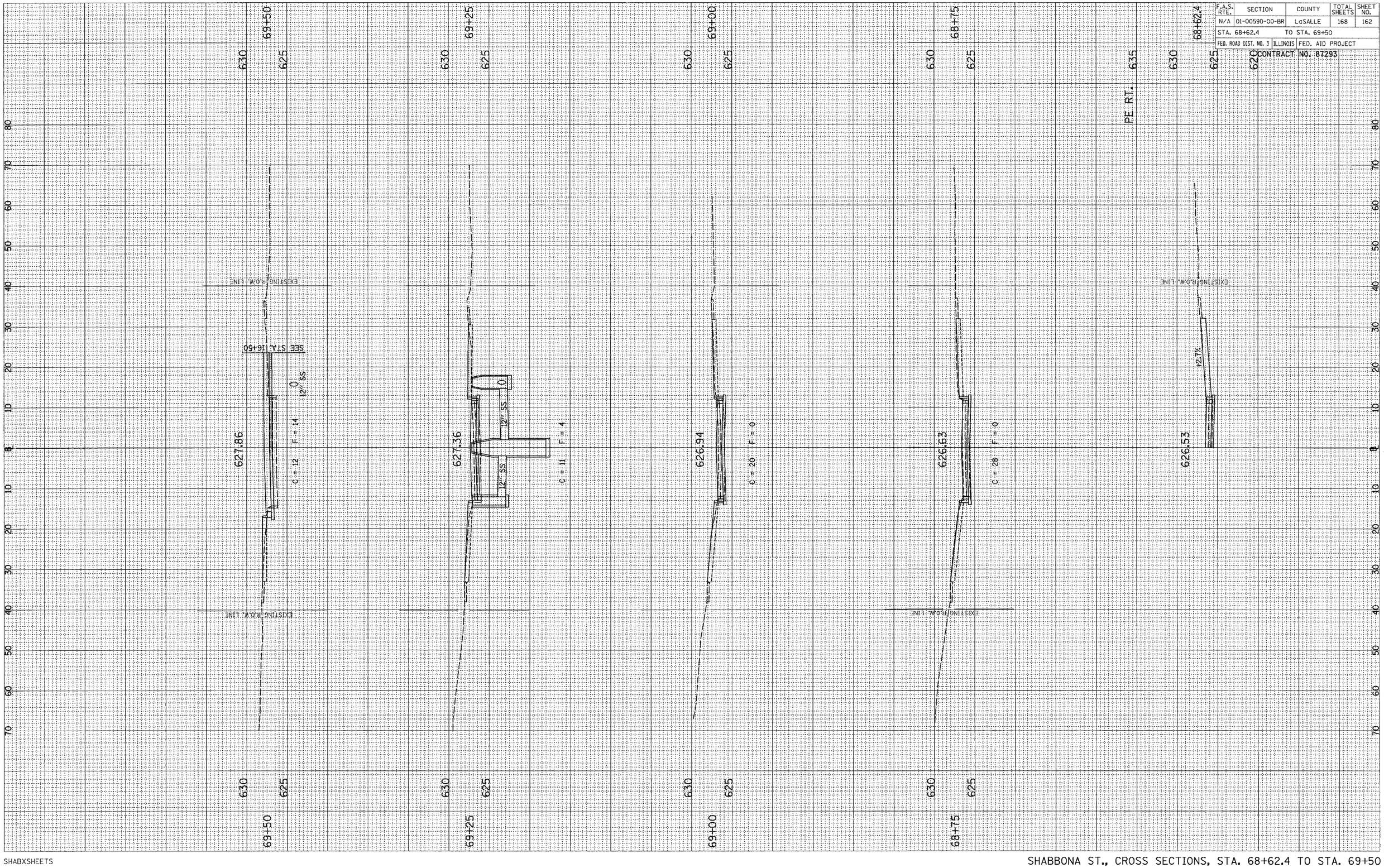

SHABBONA ST., CROSS SECTIONS, STA. 68+62.4 TO STA. 69+50

F.A.S. RTE.	SECTION	COUNTY	TOTAL SHEETS	SHEET NO.
N/A	01-00590-00-BR	LaSALLE	168	163
STA. 69+75		TO STA. 71+00		
FED. ROAD DIST. NO. 3	ILLINOIS	FED. AID PROJECT		

CONTRACT NO. 87293

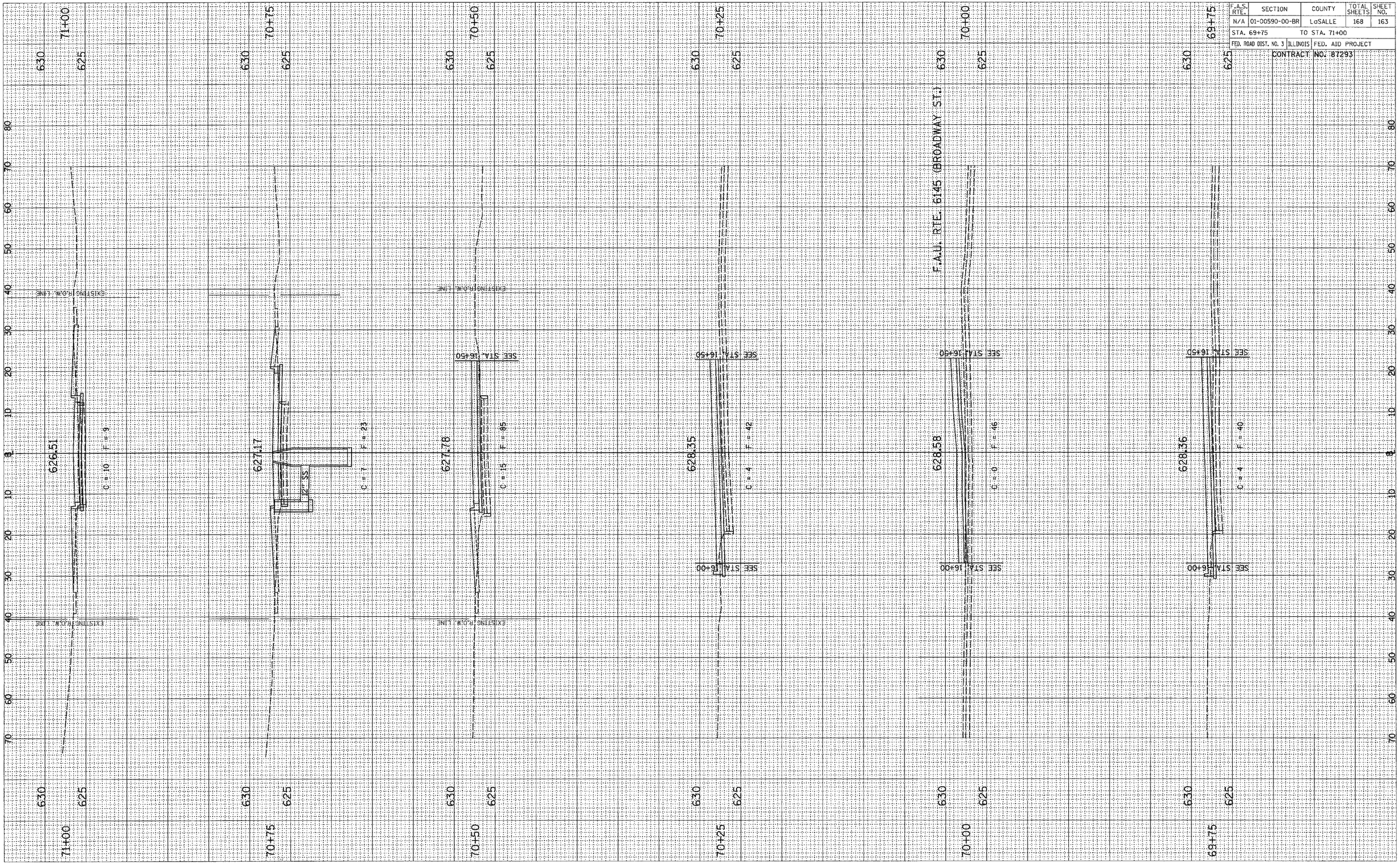

SHABXSHEETS

SHABBONA ST., CROSS SECTIONS, STA. 69+75 TO STA. 71+00

F.A.S. RTE.	SECTION	COUNTY	TOTAL SHEETS	SHEET NO.
N/A	01-00590-00-BR	LaSALLE	168	164
STA. 71+25	TO STA. 72+25			
FED. ROAD DIST. NO. 3	ILLINOIS	FED. AID PROJECT		
CONTRACT NO. 87293				

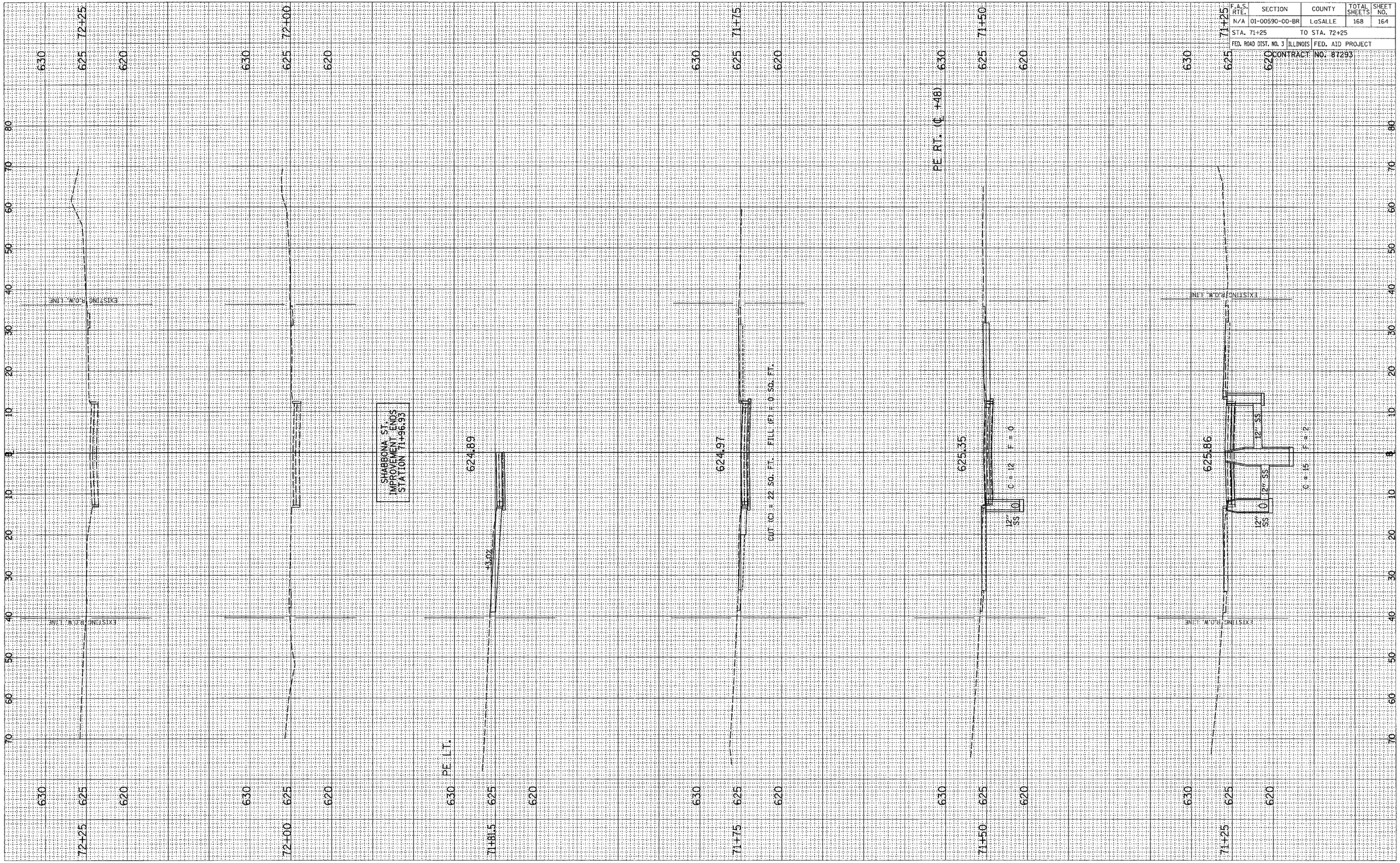

SHABXSHEETS

SHABBONA ST., CROSS SECTIONS, STA. 71+25 TO STA. 72+25

F.A.U. RTE.	SECTION	COUNTY	TOTAL SHEETS	SHEET NO.
6145	01-00590-00-BR	LaSALLE	168	165
STA. 88+00		TO STA. 89+00		
FED. ROAD DIST. NO. 3	ILLINOIS	FED. AID PROJECT		

CONTRACT NO. 87293

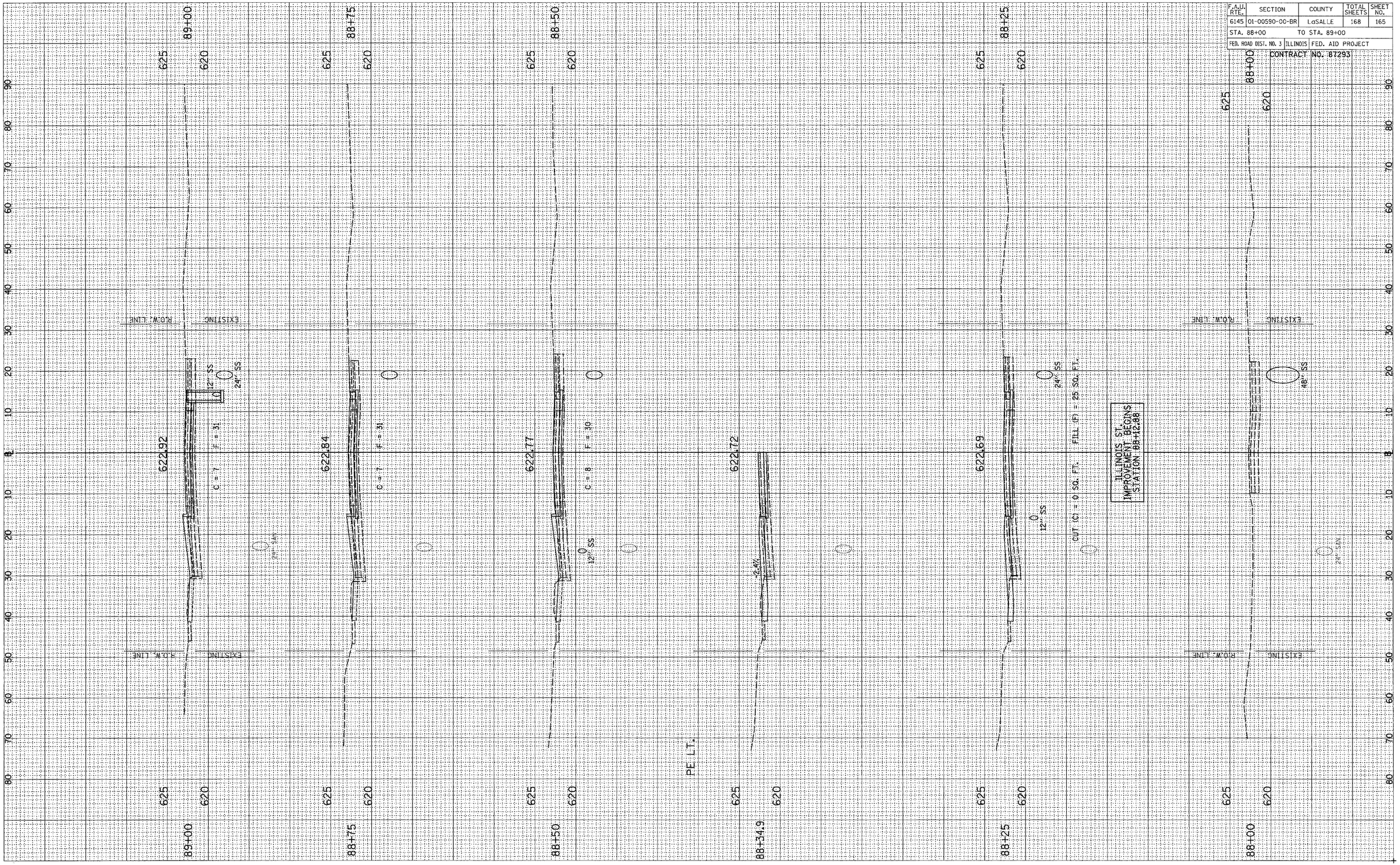

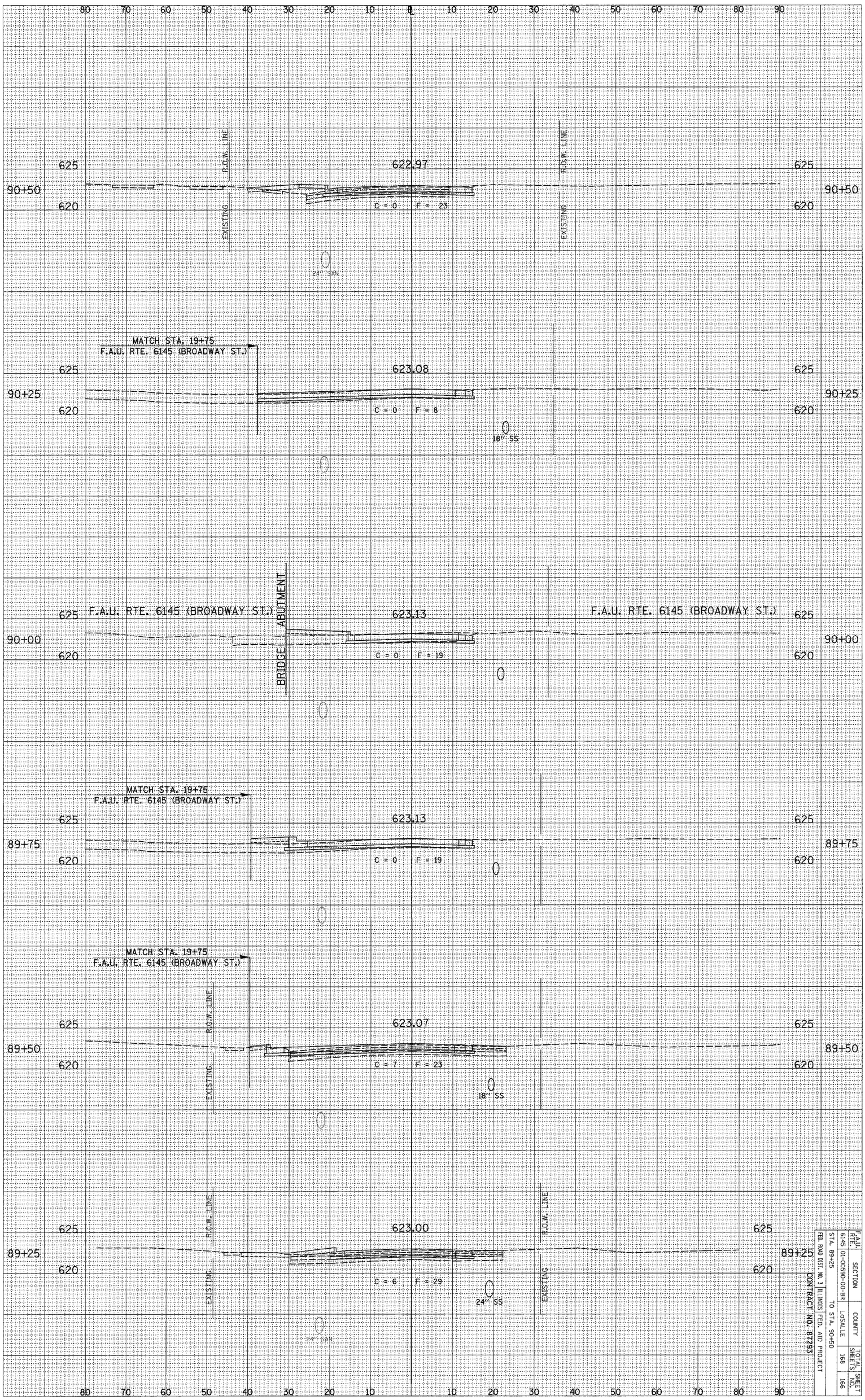

ILLINOIS ST., CROSS SECTIONS, STA. 89+25 TO STA. 90+50

F.A.U. RTE.	SECTION	COUNTY	TOTAL SHEETS	SHEET NO.
6145	01-00590-00-SR	LaSALLE	168	166

FED. ROAD DIST. NO. 3 | ILLINOIS FED. AID PROJECT | CONTRACT NO. 87293

STA. 89+25 TO STA. 90+50

F.A.U. RTE.	SECTION	COUNTY	TOTAL SHEETS	SHEET NO.
6145	01-00590-00-BR	LaSALLE	168	167
STA. 90+75		TO STA. 92+00		
FED. ROAD DIST. NO. 3	ILLINOIS	FED. AID PROJECT		

CONTRACT NO. 87293

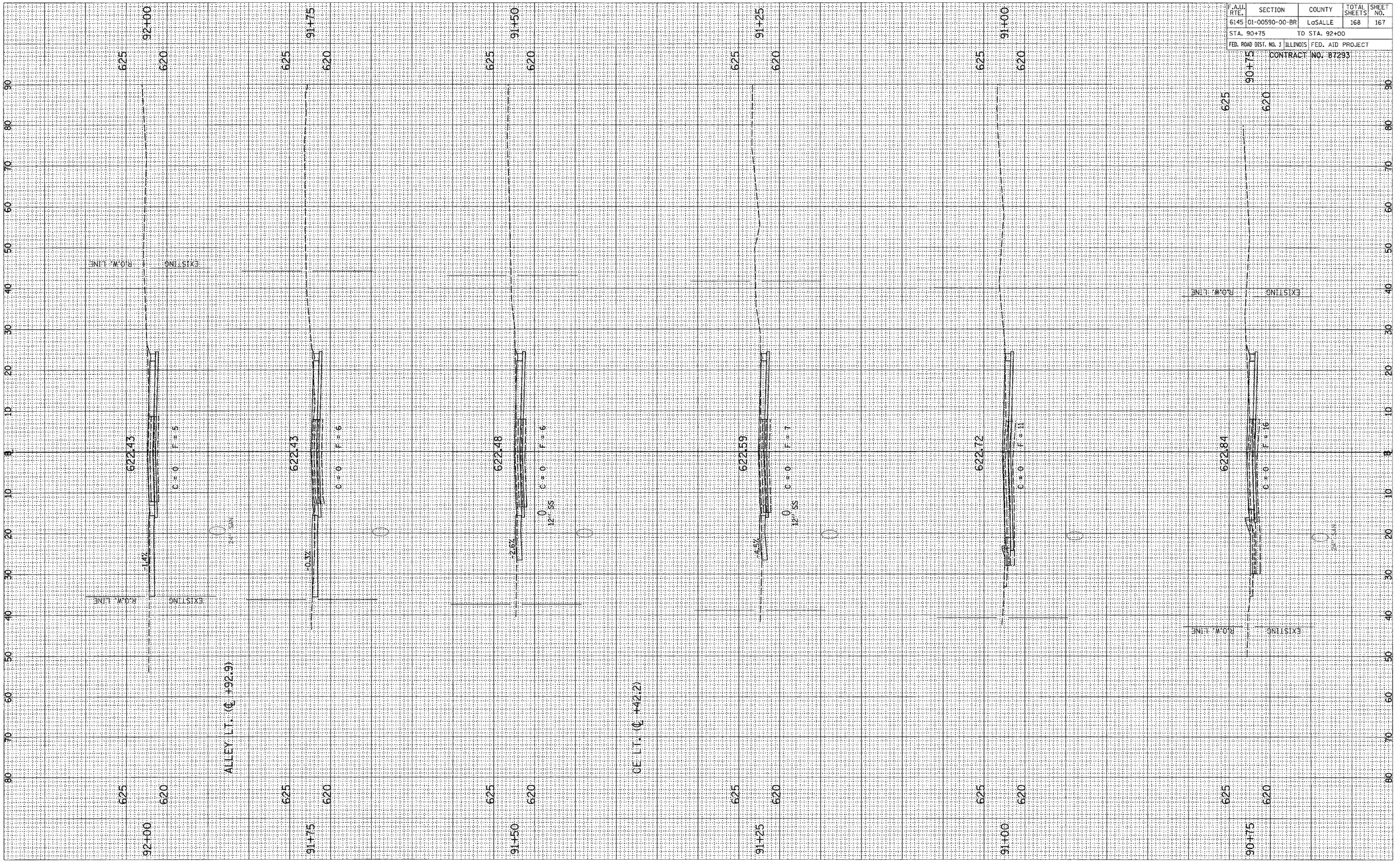

ILLINOIS ST., CROSS SECTIONS, STA. 90+75 TO STA. 92+00

F.A.U. RTE.	SECTION	COUNTY	TOTAL SHEETS	SHEET NO.
6145	01-00590-00-BR	LaSALLE	168	168
STA. 92+25		TO STA. 92+75		
FED. ROAD DIST. NO. 3	ILLINOIS	FED. AID PROJECT		

CONTRACT NO. 87293

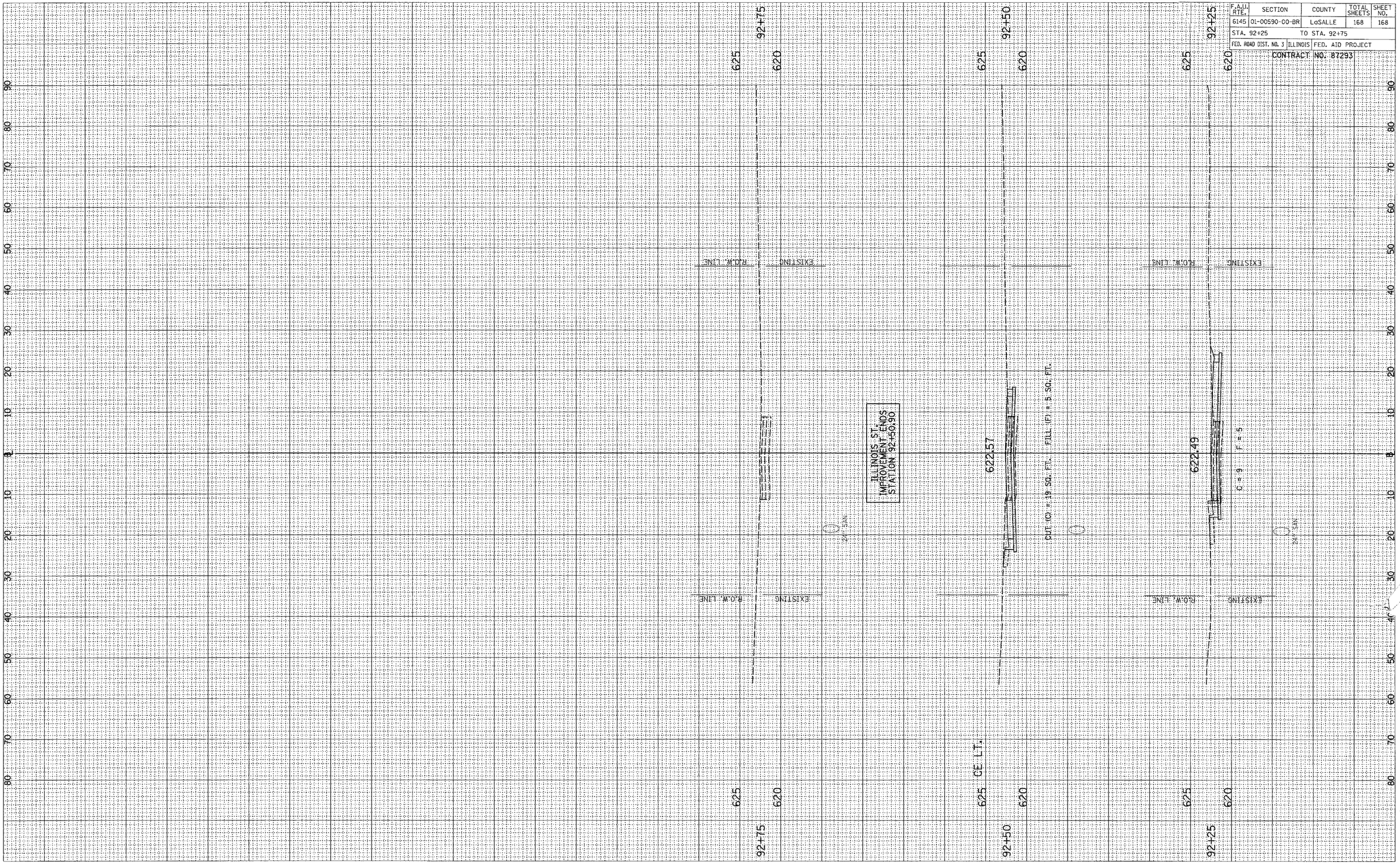

ILLINOIS ST., CROSS SECTIONS, STA. 92+25 TO STA. 92+75