ROUTE NO.	SECTION	COUNTY	TOTAL SHEETS	SHEET NO.
F.A.I. 80/94	2626.2-R-1	LAKE COUNTY, INDIANA	1207	669
		RAILWAY	FED. AID PROJECT-	

SHEET NO. S-50
72 SHEETS

CONTRACT NO. 62114 INDOT DES. NO. 0100987

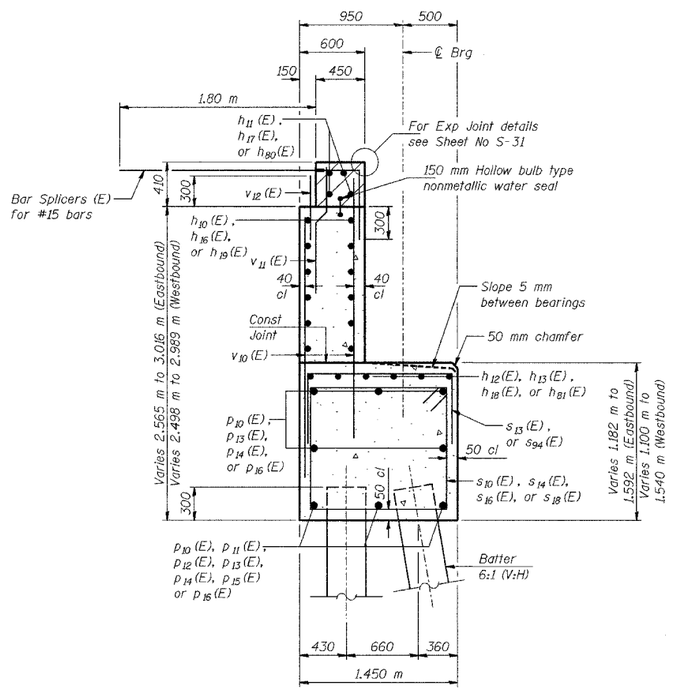

SECTION THRU ABUTMENT

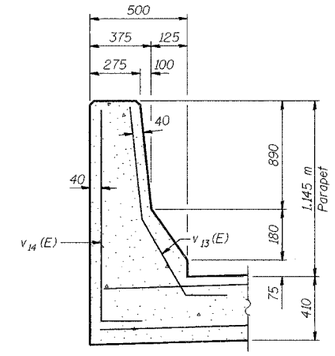

PARAPET DETAIL

WEST ABUTMENT BILL OF MATERIAL

PHASE 2

Bar	No.	Size	Length (m)	Shape
h_{10} (E)	24	#15	7.96	—
h_{11} (E)	8	#20	8.03	—
h_{12} (E)	12	#15	5.26	—
h_{13} (E)	6	#15	2.02	—
h_{14} (E)	6	#15	0.64	—
h_{15} (E)	4	#15	1.00	—
p_{10} (E)	16	#25	8.42	—
p_{11} (E)	3	#25	2.28	—
p_{12} (E)	3	#20	2.15	⌒
s_{10} (E)	42	#15	5.16	⊡
s_{11} (E)	6	#15	2.59	⊓
s_{12} (E)	18	#15	3.81	⊓
s_{13} (E)	39	#15	2.63	⊓
v_{10} (E)	104	#15	2.38	—
v_{11} (E)	52	#15	1.14	}
v_{12} (E)	52	#15	0.60	—
Test Pile, 356 mm			Each	1
Structure Backfill			m^3	97
Excavation, Foundation, Unclassified			m^3	99
Concrete, A, Substructure			m^3	44.7
Reinforcing Bars, Epoxy Coated			kg	2,320
Pile, Concrete, Steel Shell Encased, 6.35mm, 356 mm			m	188.5
Surface Seal (Estimated)			m^2	13
Threaded Tie Bar Assembly, Epoxy Coated			Each	71

PHASE 3

Bar	No.	Size	Length (m)	Shape
h_{12} (E)	36	#15	5.26	—
h_{16} (E)	24	#15	8.26	—
h_{17} (E)	8	#20	8.34	—
h_{18} (E)	6	#15	2.55	—
h_{19} (E)	36	#15	10.85	—
h_{80} (E)	12	#20	10.95	—
h_{81} (E)	6	#15	4.69	—
p_{13} (E)	16	#25	8.60	—
p_{14} (E)	16	#25	9.93	—
p_{15} (E)	3	#20	2.29	⌒
p_{16} (E)	16	#25	8.54	—
s_{14} (E)	42	#15	5.14	⊡
s_{15} (E)	20	#15	3.40	⊓
s_{16} (E)	46	#15	4.98	⊡
s_{17} (E)	10	#15	3.32	⊓
s_{18} (E)	45	#15	5.12	⊡
s_{19} (E)	4	#15	2.65	⊓
s_{94} (E)	121	#15	2.79	⊓
v_{10} (E)	320	#15	2.38	—
v_{11} (E)	160	#15	1.14	}
v_{12} (E)	160	#15	0.60	—
v_{13} (E)	6	#15	1.50	⌋
v_{14} (E)	6	#15	1.60	⌋
Structure Backfill			m^3	295
Excavation, Foundation, Unclassified			m^3	278
Concrete, A, Substructure			m^3	130.7
Reinforcing Bars, Epoxy Coated			kg	6,900
Pile, Concrete, Steel Shell Encased, 6.35mm, 356 mm			m	609.0
Surface Seal (Estimated)			m^2	40
Threaded Tie Bar Assembly, Epoxy Coated			Each	160

PILE DATA

Type - 356 ϕ Metal Shell
Capacity - 500 kN
Est Length - 14.5 m
No Reqd - 55 Total*
Test Piles - 1

* Phase 2, Stage 2: 13 reqd
Phase 3, Stage 2: 14 reqd
Phase 3, Stage 3: 28 reqd

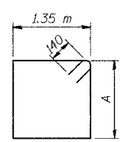

BARS s_{10} (E), s_{14} (E), s_{16} (E) and s_{18} (E)

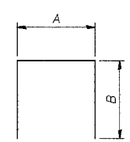

BARS s_{11} (E), s_{12} (E), s_{13} (E), s_{15} (E), s_{17} (E), s_{19} (E) and s_{94} (E)

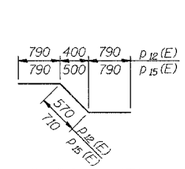

BARS p_{12} (E) and p_{15} (E)

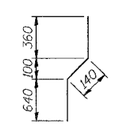

BAR v_{11} (E)

BAR DIMENSIONS

Bar	A	B
s_{10} (E)	1.09m	—
s_{11} (E)	1.09m	750
s_{12} (E)	1.49m	1.16m
s_{13} (E)	1.35m	640
s_{14} (E)	1.08m	—
s_{15} (E)	1.08m	1.16m
s_{16} (E)	1.00m	—
s_{17} (E)	1.00m	1.16m
s_{18} (E)	1.07m	—
s_{19} (E)	1.07m	790
s_{94} (E)	1.35m	720

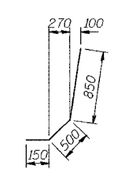

BAR v_{13} (E)

BAR v_{14} (E)

NOTES:

Space reinforcement in cap to miss anchor bolts.

Pour steps monolithically with cap.

Hatched area to be poured after superstructure forms have been removed. Quantity of concrete included with Concrete, C. Superstructure.

Reinforcement bars designated (E) shall be epoxy coated.

All dimensions are in millimeters (mm) except as noted.

All edges shall have standard 20 mm chamfers except as noted.

MINIMUM BAR LAPS

#15 bars = 640
#20 bars = 790
#25 bars = 1320

DESIGNED	BHS
CHECKED	KFA
DRAWN	MJB
CHECKED	GSP

PHASE 2 FOR INFORMATION ONLY

ILLINOIS DEPARTMENT OF TRANSPORTATION
F.A.I. ROUTE 80/94 (BORMAN EXPRESSWAY)
OVER LITTLE CALUMET RIVER & N.I.C.T.D. R.O.W.

WEST ABUTMENT DETAILS
SECTION 2626.2-R-1
LAKE COUNTY, INDIANA
STATION 8+470.000
STRUCTURE NO. I-80-1-8460 (EB & WB)
(016-I003 & 016-I004)

DATE 07/05

AMERICAN CONSULTING ENGINEERS