ROUTE NO.	SECTION	COUNTY	TOTAL SHEETS	SHEET NO.
F.A.I. 80/94	2626.2-R-1	LAKE COUNTY, INDIANA	1207	671
		ILLINOIS FED. AID PROJECT-		

SHEET NO. S-52
72 SHEETS

CONTRACT NO. 62114 INDOT DES. NO. 0100987

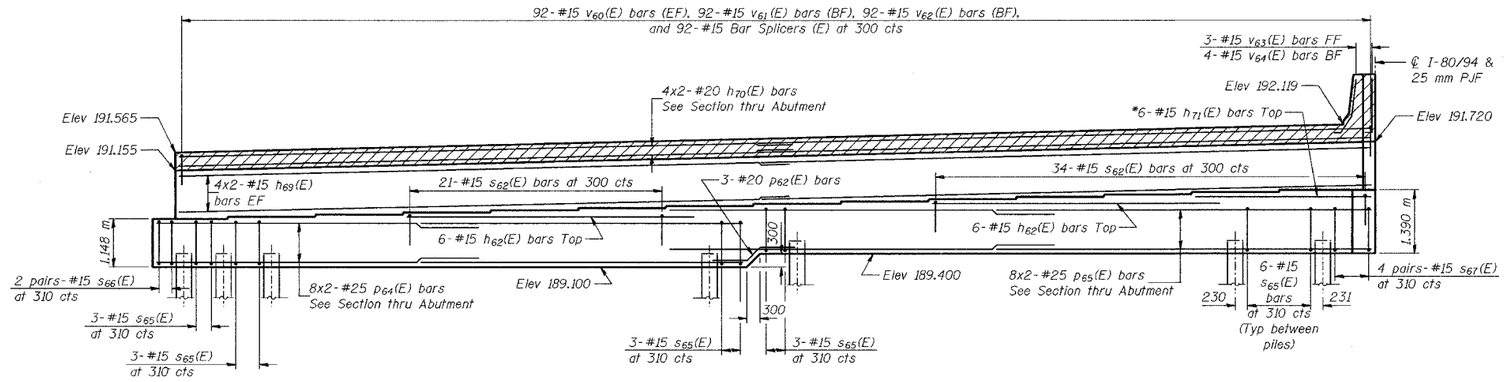

ELEVATION

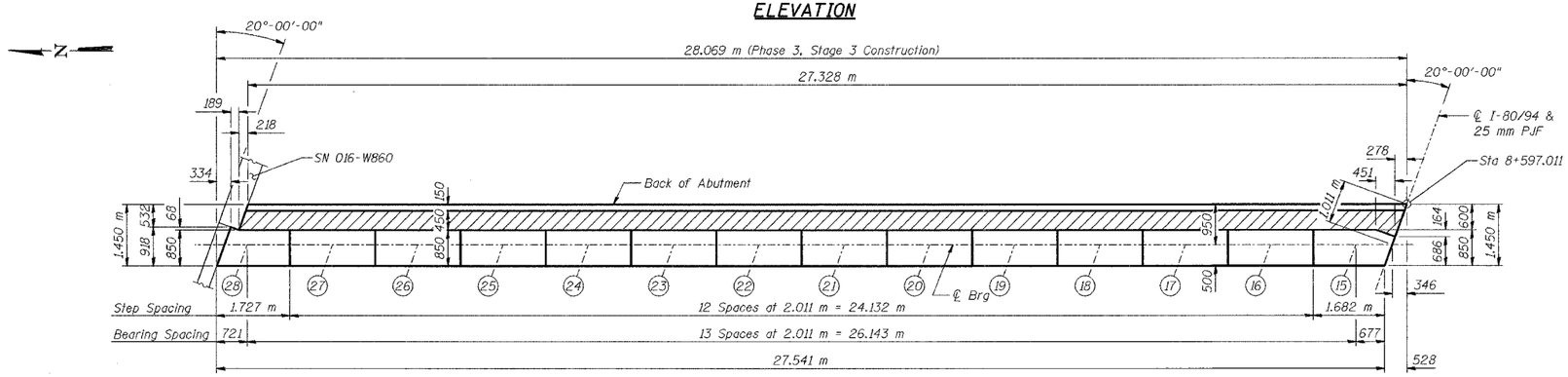

TOP VIEW

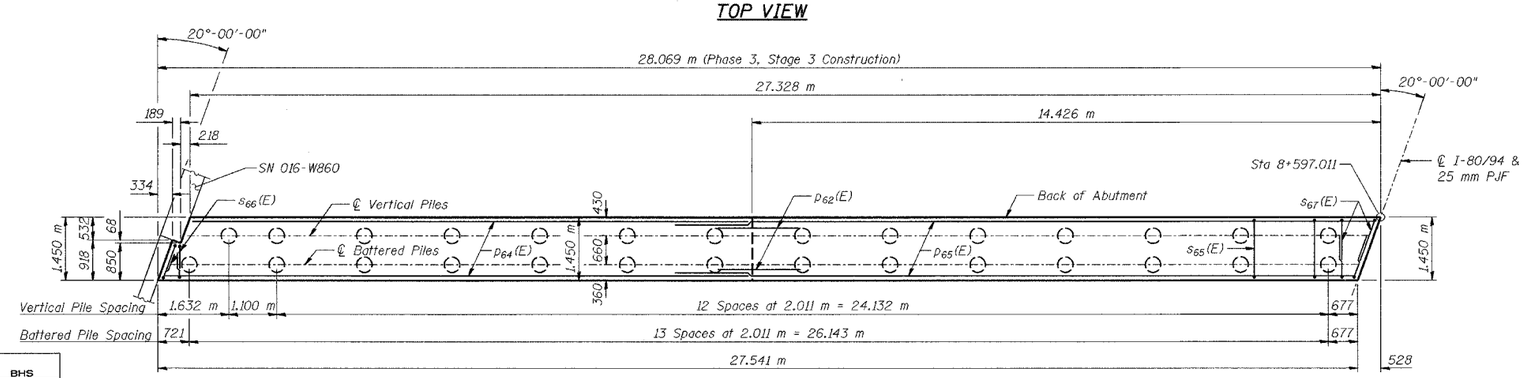

PLAN-PILE CAP

DESIGNED	BHS
CHECKED	KFA
DRAWN	MJB
CHECKED	GSP

BEARING SEAT ELEVATIONS

Beam	Seat Elevation
28	190.248
27	190.290
26	190.332
25	190.374
24	190.416
23	190.458
22	190.499
21	190.541
20	190.583
19	190.624
18	190.666
17	190.707
16	190.749
15	190.790

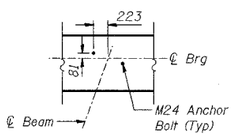

ANCHOR BOLT LAYOUT

LEGEND

EF - Each Face
FF - Front Face
BF - Back Face

MINIMUM BAR LAPS

#15 bars = 640
#20 bars = 790
#25 bars = 1320

NOTES:

See Sheet No S-53 for abutment details, Expansion Joint Detail, and Bill of Material.

Space reinforcement in cap to miss anchor bolts.

Pour steps monolithically with cap.

Hatched area to be poured after superstructure forms have been removed. Quantity of concrete included with Concrete, C, Superstructure.

Reinforcement bars designated (E) shall be epoxy coated.

Bars indicated thus 20 x 3-#15 etc. indicates 20 lines of bars with 3 lengths per line.

All dimensions are in millimeters (mm) except as noted.

All edges shall have standard 20 mm chamfers except as noted.

* Cut bars to fit in field.

Apply Surface Seal to top surface of abutment seat and vertical faces of steps.

ILLINOIS DEPARTMENT OF TRANSPORTATION
F.A.I. ROUTE 80/94 (BORMAN EXPRESSWAY)
OVER LITTLE CALUMET RIVER & N.I.C.T.D. R.O.W.

EAST ABUTMENT – WESTBOUND
SECTION 2626.2–R–1
LAKE COUNTY, INDIANA
STATION 8+470.000
STRUCTURE NO. I–80–1–8460 (EB & WB)
(016–I003 & 016–I004)

DATE 07/05

AMERICAN CONSULTING ENGINEERS