F.A.I RTE.	SECTION	COUNTY	TOTAL SHEETS	SHEET NO.
70	82-(1,2)T-17	ST. CLAIR	77	20
FED. ROAD DIST. NO.	ILLINOIS	FED. AID PROJECT		

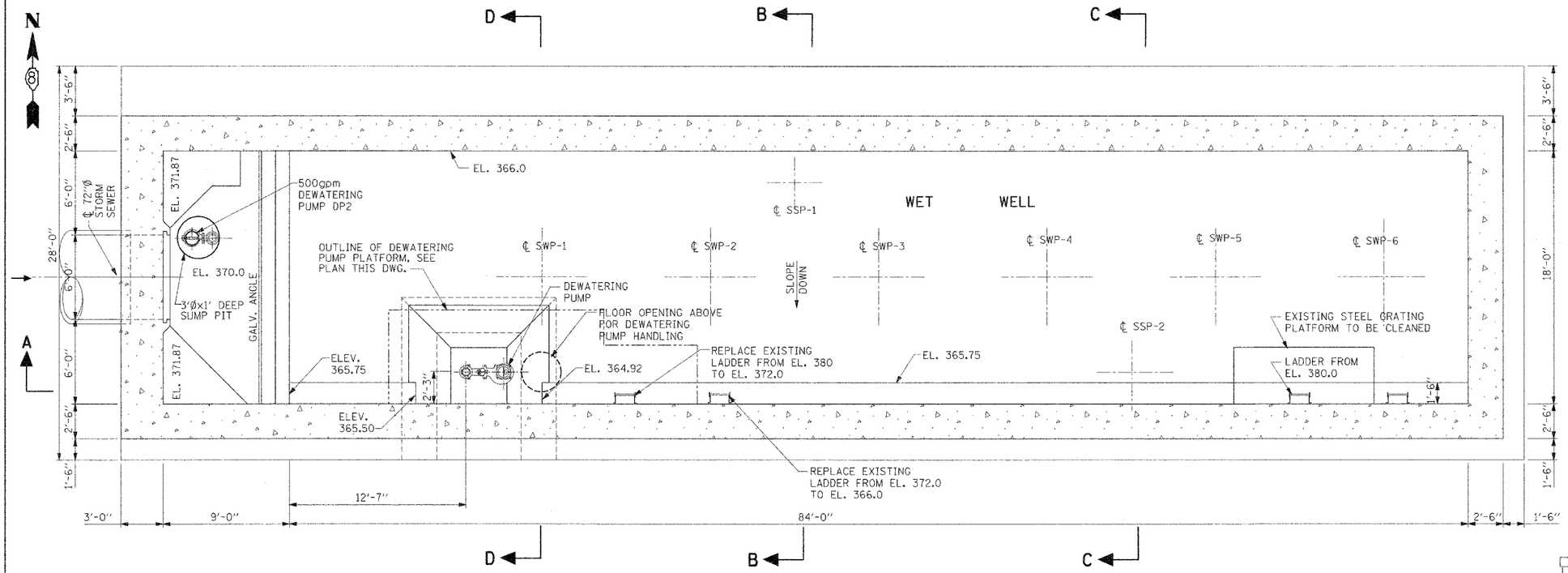

PLAN @ EL. 366.0

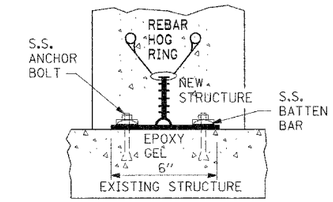

GREENSTREAK SPECIAL SHAPE 609 SYSTEM

RETROFIT WATERSTOP DETAIL

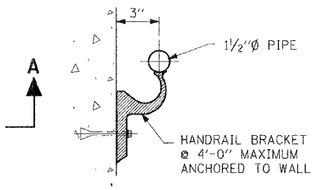

WALL MOUNTED HANDRAIL DETAIL

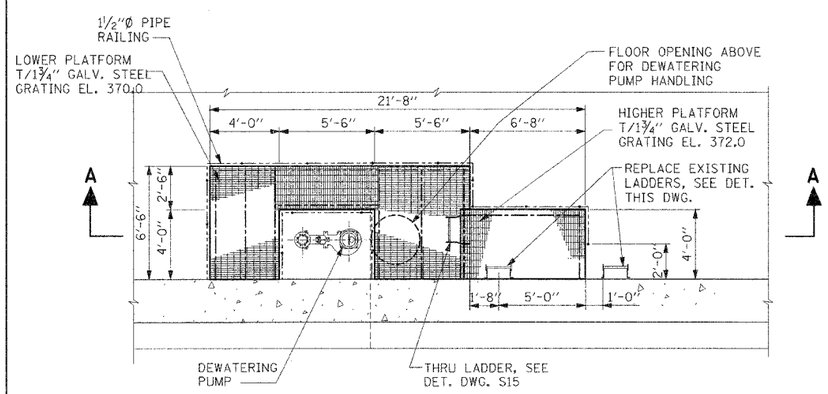

DEWATERING PUMP PLATFORM GRATING PLAN EL. 370.0 & 372.0

FOR PLATFORM FRAME SEE DET. DWG. S4 & S16

0' 2' 4' 8'
SCALE: 1"= 4'

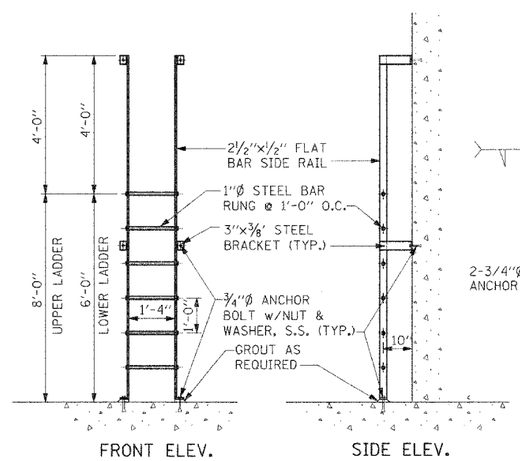

LADDER DETAIL

FOR PLATFORM ELEV. SEE DWG. S4

0' 1' 2' 4'
SCALE: 1"= 2'

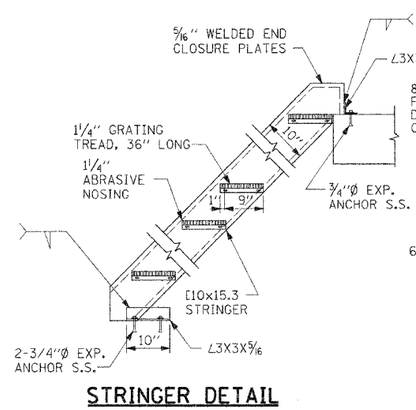

STRINGER DETAIL

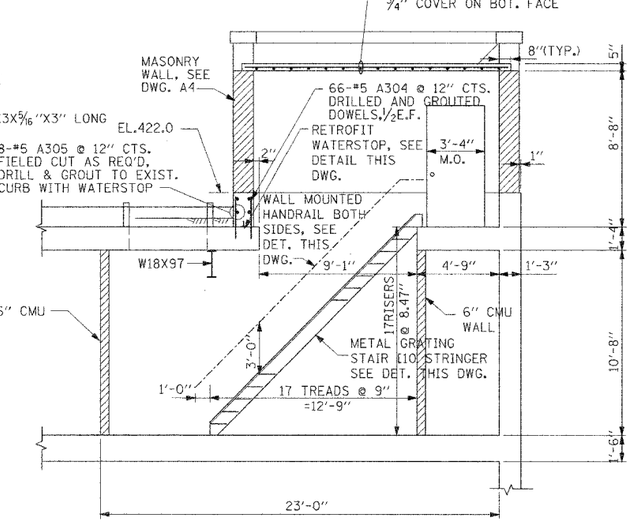

SECT. F-F

0' 2' 4' 8'
SCALE: 1"= 4'

GENERAL NOTES:
1. ALL STEEL SHAPES, PLATES, GRATINGS AND MEMBERS SHALL BE HOT DIP GALVANIZED AFTER FABRICATION.
2. FOR STAIRWELL ARCHITECTURAL DETAILS, SEE ARCHITECTURAL DRAWINGS.
3. FOR STAIRWELL MECHANICAL HVAC DETAILS, SEE MECHANICAL DRAWINGS.

YA-TAI LIN 81-3085 REGISTERED STRUCTURAL ENGINEER OF CHICAGO, ILLINOIS
4/7/05

S3

REVISIONS	
NAME	DATE

ILLINOIS DEPARTMENT OF TRANSPORTATION

BOWMAN AVENUE PUMP STATION REHABILITATION

STRUCTURAL PLANS (PUMP STATION)

SCALE: AS SHOWN — DRAWN BY: CTM

DATE: 09-12-05 — CHECKED BY: SP

PLOT DATE: *DATE-TIME*

ALVORD, BURDICK & HOWSON, L.L.C.
ENGINEERS — CHICAGO

PLAN NOTE	BY	DATE
1	SURVEYED 1-20-04 PLOTTED BY CHECKED RT. OF WAY CHECKED DATA FILE NAME	

DATE
DATE-TIME
DGN-SPEC
DGN-SS
REF