F.A.I RTE.	SECTION	COUNTY	TOTAL SHEETS	SHEET NO.
70	82-(1,2)T-17	ST. CLAIR	77	28
FED. ROAD DIST. NO.	ILLINOIS	FED. AID PROJECT		

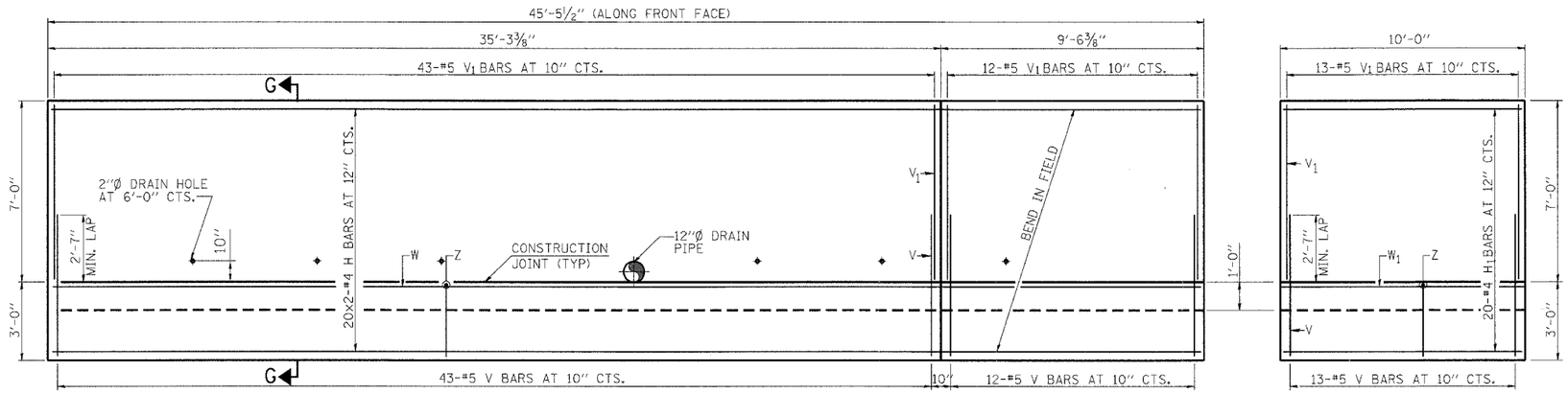

ELEVATION

(LOOKING NORTH)

SCALE: 0' 1' 2' 4' 6'

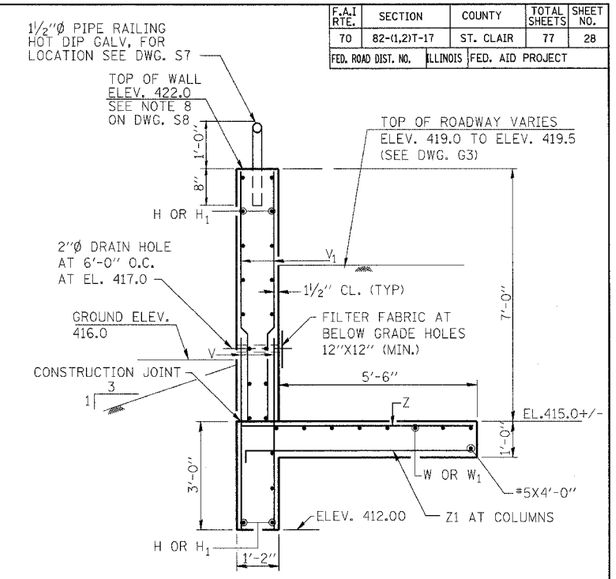

SECTION G-G

SCALE: 0' 1' 2' 4'

N

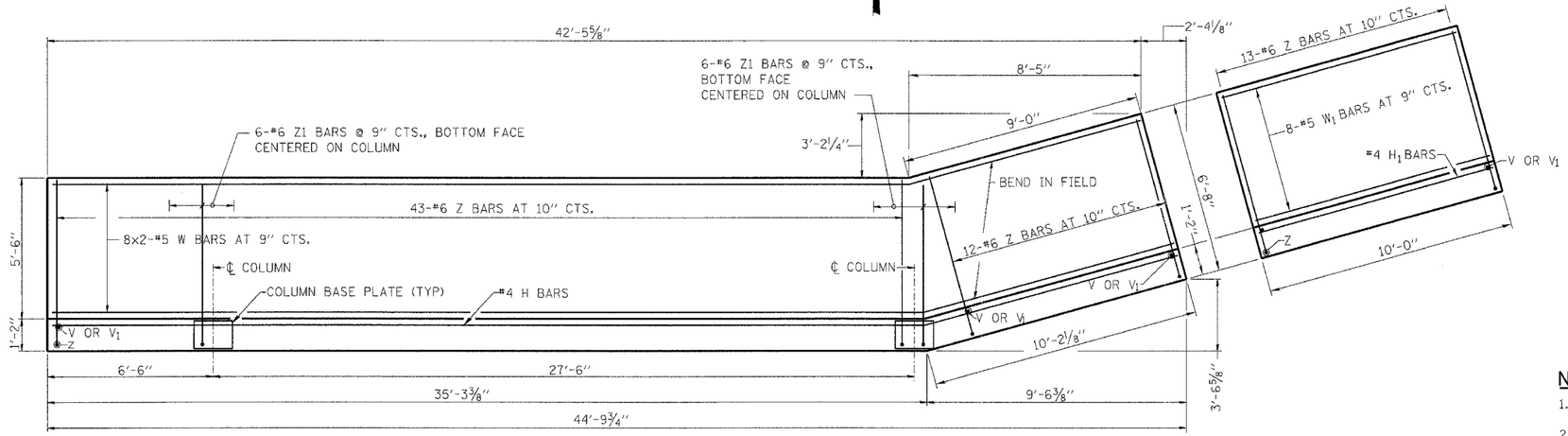

PLAN

SCALE: 0' 1' 2' 4' 6'

RETAINING WALL BILL OF MATERIAL

BAR	NO.	SIZE	LENGTH	SHAPE
H	40	#4	22'-6"	
H_1	20	#4	9'-8"	
V	68	#5	5'-5"	
V_1	68	#5	6'-10"	
W	16	#5	22'-9"	
W_1	8	#5	9'-8"	
Z	68	#6	9'-0"	
Z1	12	#6	7'-2"	
CLASS SI CONCRETE			CU. YD.	35.4
REINFORCEMENT BARS, EPOXY COATED			POUND	3210
STRUCTURE EXCAVATION			CU. YD.	70

NOTES

1. REINFORCED BARS SHALL CONFORM TO THE REQUIREMENTS OF AASHTO M-31, OR M322 GRADE 60.
2. BARS INDICATED THUS 12 x 4-#5 ETC. INDICATES 12 LINES OF BARS WITH 4 LENGTHS PER LINE.
3. ALL CONSTRUCTION JOINTS SHALL BE BONDED.
4. ½" P.J.F. SHALL EXTEND FROM TOP OF FOOTING TO THE TOP OF WALL.
5. MAX. SOIL PRESSURE UNDER FOOTING= 5200 P.S.F.

MIN. LAP

#4 BARS = 1'-8"
#5 BARS = 2'-2"

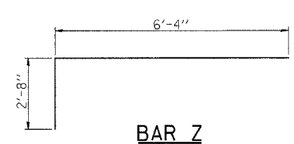

BAR Z

(NOT TO SCALE)

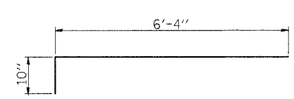

BAR Z1

(NOT TO SCALE)

LICENSED STRUCTURAL ENGINEER MICHAEL T. HALEY 081-005991 STATE OF ILLINOIS

Michael T. Haley 9-7-05

LIN ENGINEERING, LTD.

S11

REVISIONS	
NAME	DATE

ILLINOIS DEPARTMENT OF TRANSPORTATION

BOWMAN AVENUE PUMP STATION REHABILITATION

RETAINING WALL

SCALE: AS SHOWN
DATE: 09-12-05
DRAWN BY: JMD
CHECKED BY: KC

PLOT DATE: *DATE-TIME*

PLAN	DATE
SURVEYED	
PLOTTED	
ALIGNMENT CHECKED	
RT. OF WAY CHECKED	
CADD FILE NAME	
NOTE BOOK NO.	

DGN
DATE-TIME
DGN-SPEC
REF
REF