F.A.I. RTE.	SECTION	COUNTY	TOTAL SHEETS	SHEET NO.
70	82-(1,2)T-17	ST. CLAIR	77	50
FED. ROAD DIST. NO.	ILLINOIS	FED. AID PROJECT		

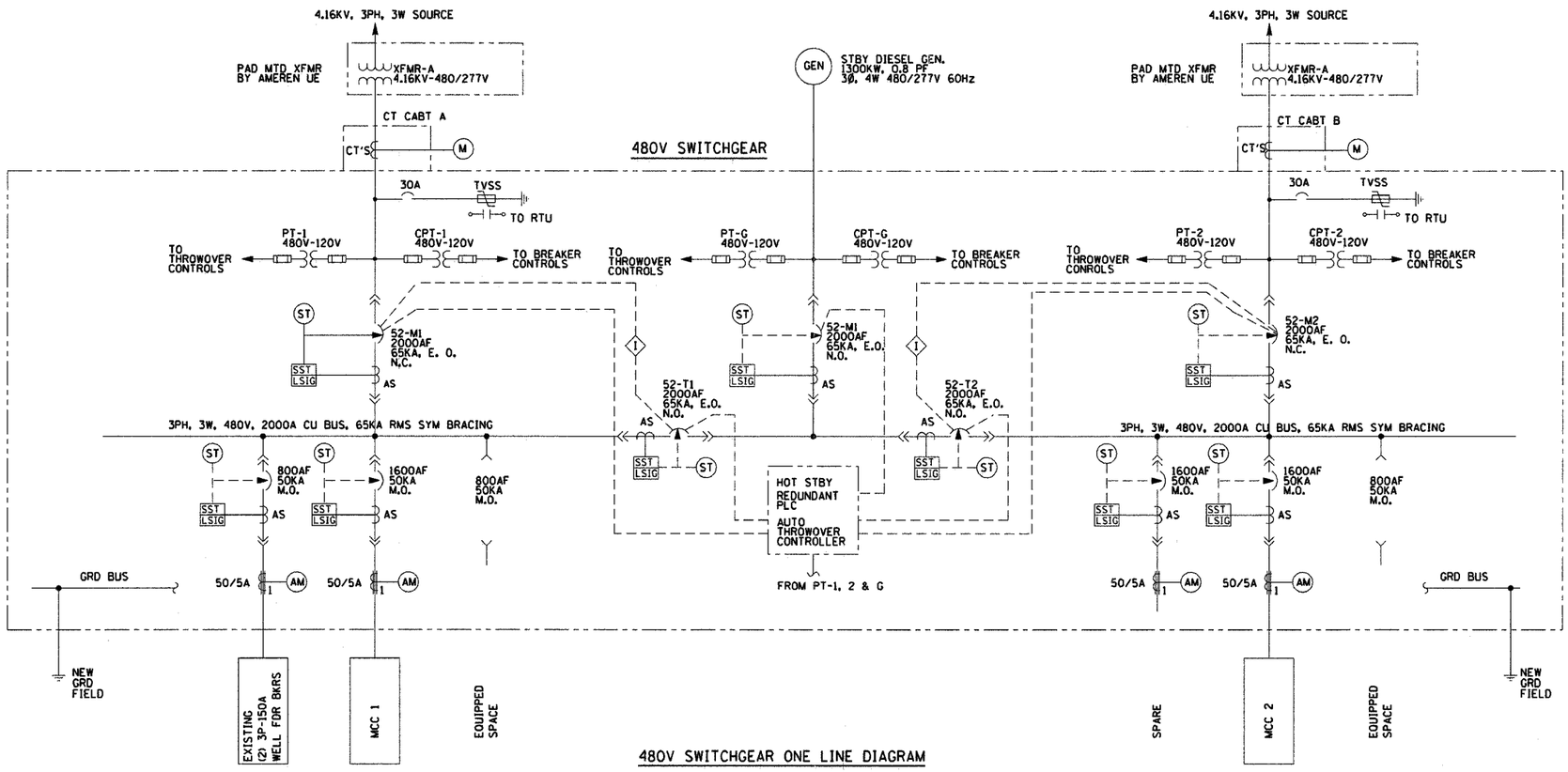

480V SWITCHGEAR ONE LINE DIAGRAM

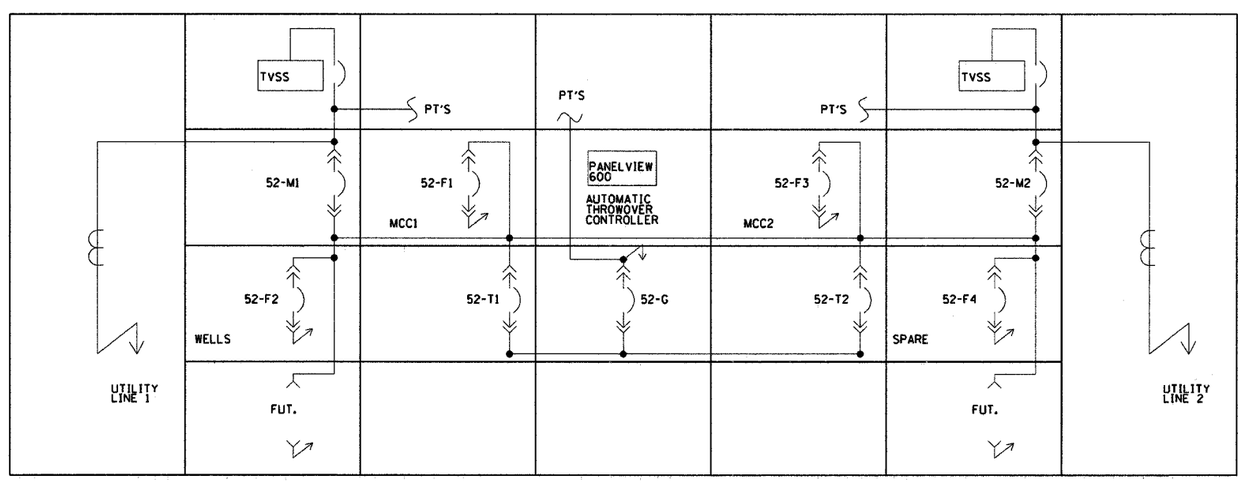

480V SWITCHGEAR FRONT ELEVATION

LEGEND:

AS	CURRENT SENSOR
CT	CURRENT TRANSFORMER
EO	ELECTRIC OPERATOR
MO	MANUALLY OPERATED
MCCB	MOLDED CASE CIRCUIT BREAKER
PT	POTENTIAL TRANSFORMER
CPT	CONTROL POWER TRANSFORMER
CLF	INDICATES CURRENT LIMITING TYPE
	HIGH VOLTAGE CABLE LOAD BREAK CONNECTOR
	FUSE
AS	DRAW OUT TYPE LOW VOLTAGE POWER CIRCUIT BREAKER WITH BUILT-IN CURRENT SENSOR
SST LSIG	SOLID STATE TRIP DEVICE LOWER LETTERS: L - LONG TIME DELAY S - SHORT TIME DELAY I - INSTANTANEOUS G - GROUND FAULT
ST	SHUNT TRIP
AM	AMMETER
I	INTERLOCK

NOTES:

1. SPACE SHALL BE PREPARED TO ACCEPT A FUTURE BREAKER.
2. ALL BREAKERS SHALL HAVE DIGITRIP DT-1150, WITH SYSTEM COMMUNICATION.

E8

REVISIONS	
NAME	DATE

ILLINOIS DEPARTMENT OF TRANSPORTATION

BOWMAN AVENUE PUMP STATION REHABILITATION

SWITCHGEAR ONE LINE DIAGRAM & ELEVATION

SCALE: AS SHOWN — DRAWN BY: SL

DATE: 09-12-05 — CHECKED BY: KCC

PLOT DATE: *DATE-TIME*

ALVORD, BURDICK & HOWSON, L.L.C.
ENGINEERS — CHICAGO

PLAN — NOTE BOOK NO. — SURVEYED — PLOTTED — ALIGNMENT CHECKED — RT. OF WAY CHECKED — CADD FILE NAME — BY — DATE

$$DATE$$
DATE-TIME
DGN-SPEC
REF-L
*REF-

C:\D\DOT0421\Design\E08.dgn 10/12/2005 1:48:47 PM