F.A.I RTE.	SECTION	COUNTY	TOTAL SHEETS	SHEET NO.
70	82-(1,2)T-17	ST. CLAIR	77	68
FED. ROAD DIST. NO.	ILLINOIS	FED. AID PROJECT		

PLAN	SURVEYED	BY	DATE
NOTE BOOK NO. ____	PLOTTED ALIGNMENT CHECKED RT. OF WAY CHECKED CADD FILE NAME		

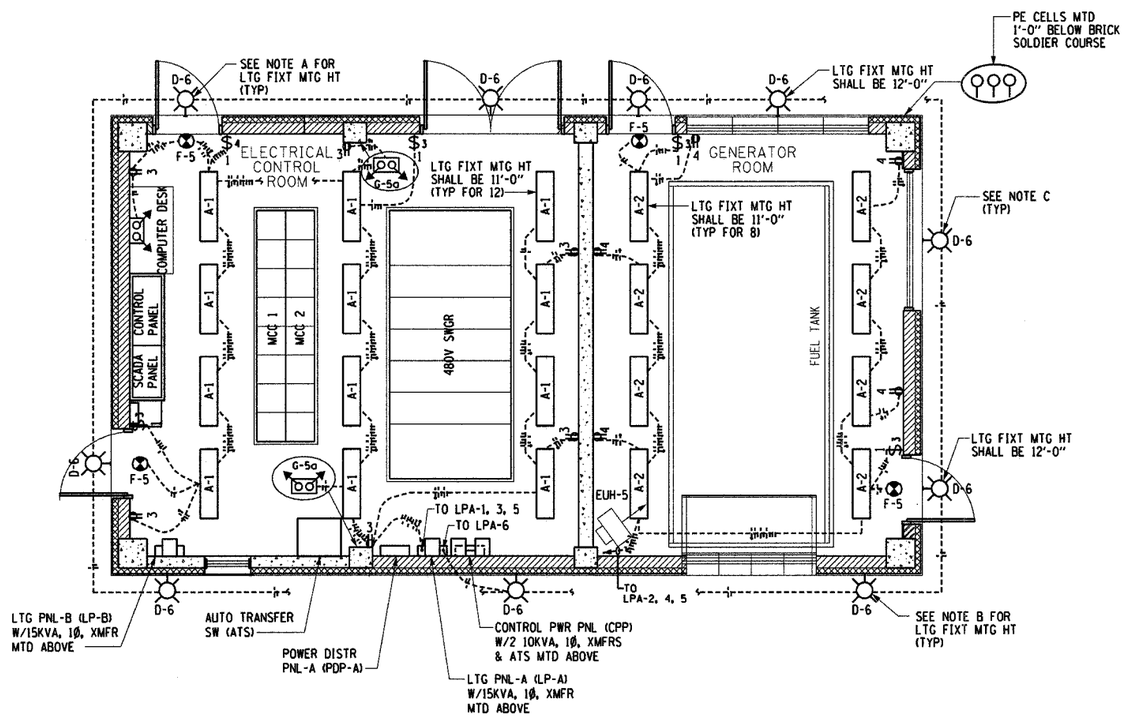

ELECTRICAL CONTROL/GENERATOR BUILDING LIGHTING PLAN

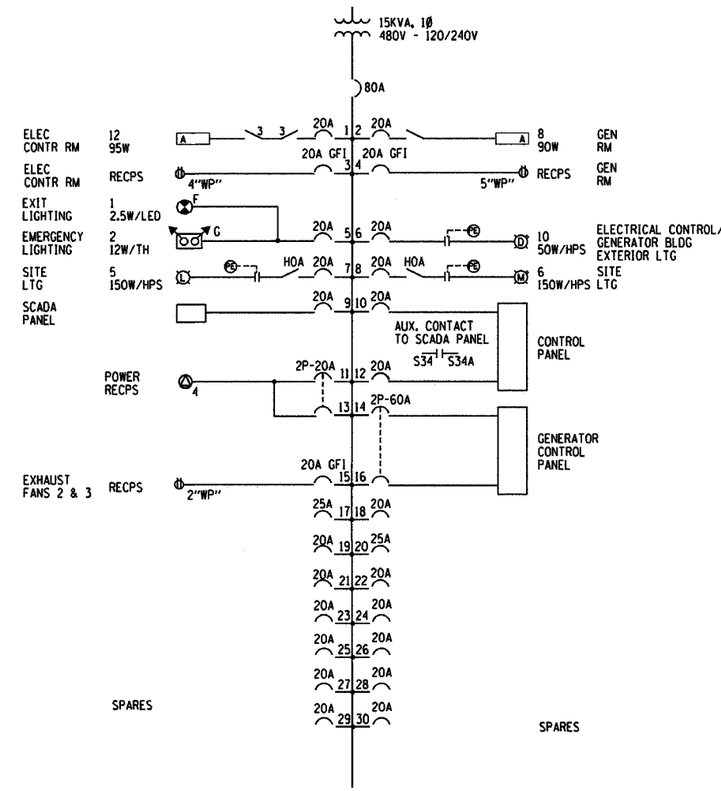

LIGHTING PANEL A (LP-A)

120/240V, 1Ø, 3W, 80A MB, S/N

ELECTRICAL CONTROL ROOM

GENERAL NOTES:

1. ALL ELECTRICAL INSTALLATION IN THE ELECTRICAL CONTROL/ GENERATOR BUILDING SHALL BE NON-HAZARDOUS.
2. ALL FLOOR & WALL PENETRATIONS SHALL BE CORE DRILLED & SEALED WITH NON-SHRINK GROUT.
3. LIGHTING CABLES MINIMUM SIZE SHALLL BE #12 AWG, SOLID.
4. LIGHTING CONDUIT MINIMUM SIZE SHALL BE ¾".

NOTES:

A. LIGHTING FIXTURE MOUNTING HEIGHT ON NORTH, EAST AND WEST BUILDING FACES SHALL BE 9'-0" UNLESS OTHERWISE NOTED

B. LIGHTING FIXTURE MOUNTING HEIGHT ON SOUTH BUILDING FACE SHALL BE 12'-0" UNLESS OTHERWISE NOTED

C. CONDUIT SHOWN ON BUILDING EXTERIOR FOR CKT 6 SHALL BE ROUTED AS CONCEALED TYPE. THE WALL MOUNTED LIGHTING FIXTURES SHALL HAVE RECESSED TYPE JUNCTION BOXES

0' 2' 3' 8'
SCALE: 1"= 3'

E26

REVISIONS	
NAME	DATE

ILLINOIS DEPARTMENT OF TRANSPORTATION

BOWMAN AVENUE PUMP STATION REHABILITATION

LIGHTING PLANS SHEET 3

SCALE: AS SHOWN — DRAWN BY: RRA

DATE: 09-12-05 — CHECKED BY: KCC

PLOT DATE: *DATE-TIME*

ALVORD, BURDICK & HOWSON, L.L.C.
ENGINEERS — CHICAGO

DATE
DATE-TIME
DGN-SPEC
SPEC
REF