SECTION	COUNTY	TOTAL SHEETS	SHEET NO.
02-00034-00-BT	DUPAGE	108	30
STA.	TO STA.		
IDOT PROJECT NO. M-8003(216)			
SALT CREEK GREENWAY TRAIL			

CONTRACT NO. 83714

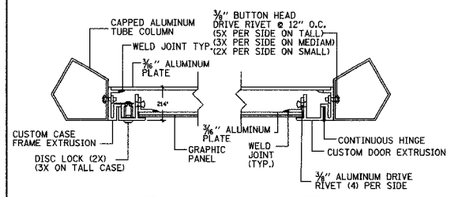

CABINET W/ LEXAN PANEL

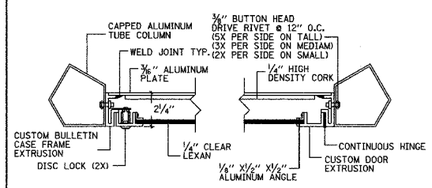

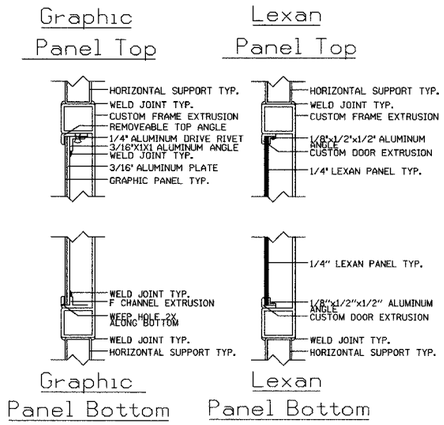

D3 D1.0 KIOSK CABINET DETAILS
PLAN - 1"=4"

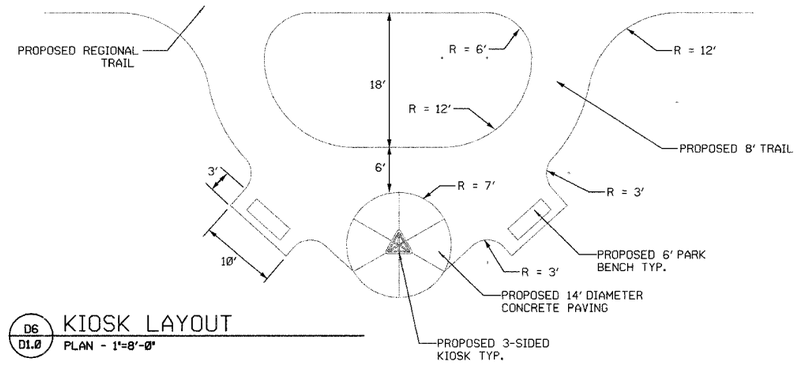

D6 D1.0 KIOSK LAYOUT
PLAN - 1"=8'-0"

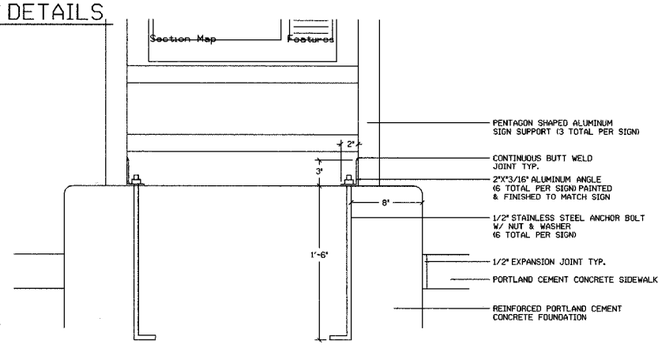

B3 D1.0 SURFACE MOUNT DETAIL
PLAN - N.T.S.

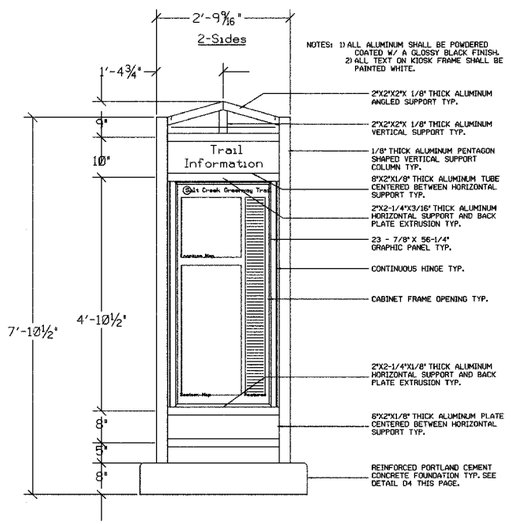

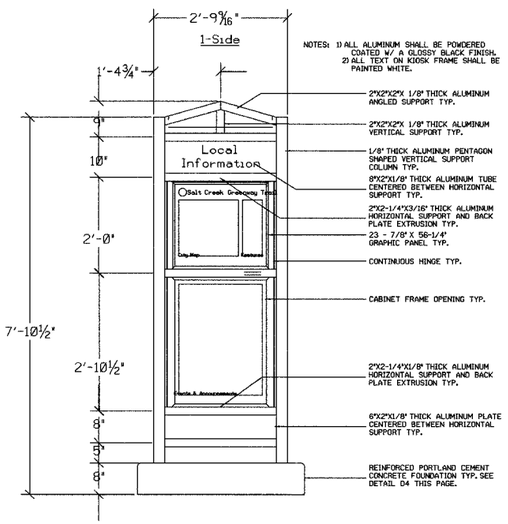

B6 D1.0 KIOSK DETAIL
ELEVATION - N.T.S.

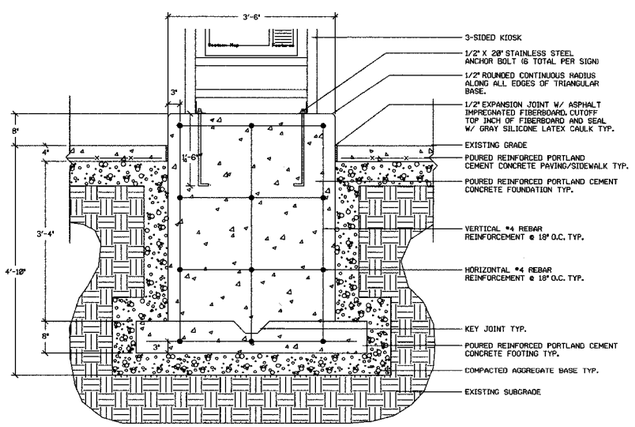

A3 D1.0 FOUNDATION DETAIL
PLAN - N.T.S.

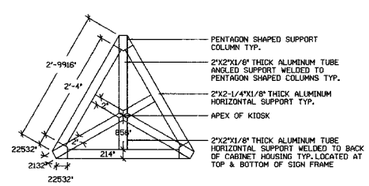

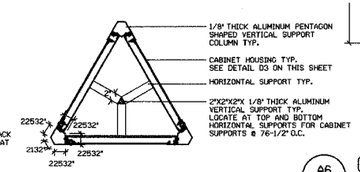

A5 D1.0 KIOSK TOP DETAIL
PLAN - 1/2"=1'-0"

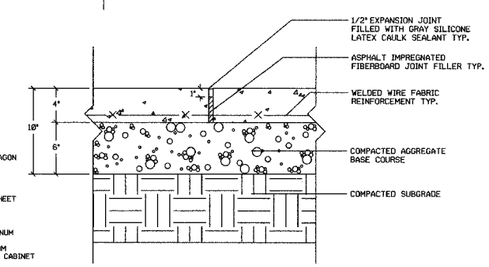

A6 D1.0 CONCRETE PAVING DETAIL
SECTION - N.T.S.

REVISIONS		
NO.	NAME	DATE

URS
1701 GOLF ROAD, SUITE 1000 TEL (847) 228-0707
ROLLING MEADOWS, IL 60008 FAX (847) 228-1115

VILLAGE OF OAK BROOK

SALT CREEK GREENWAY TRAIL

INFORMATION KIOSK DETAILS

DATE: 7/20/05 DRAWN BY: MIA&VP

DESIGNED BY: MIA CHECKED BY: DDL