F.A.P. RTE.	SECTION	COUNTY	TOTAL SHEETS	SHEET NO.
840	143 N	WILL	121	15
STA.		TO STA.		
FED. ROAD DIST. NO. 1		ILLINOIS	FED. AID PROJECT	

CONTRACT NO. - 60445

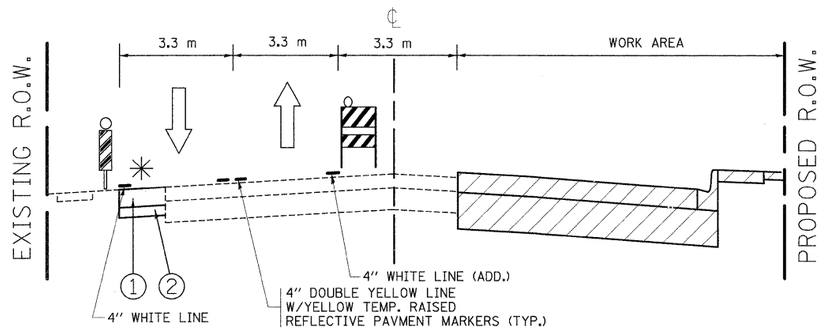

STA. 1+160 TO STA. 1+260

STAGE I

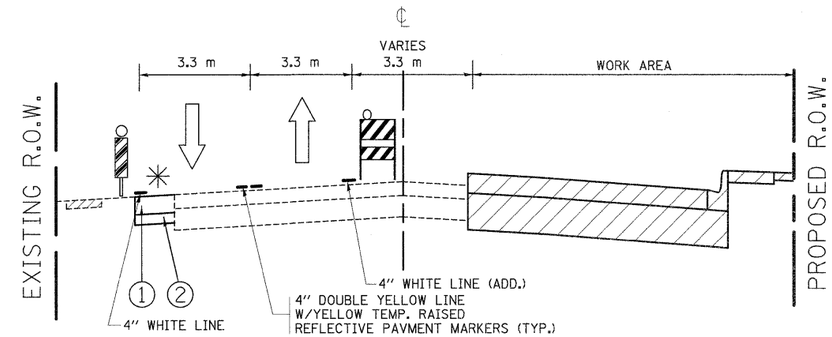

STA. 1+375 TO STA. 1+396.2

STAGE I

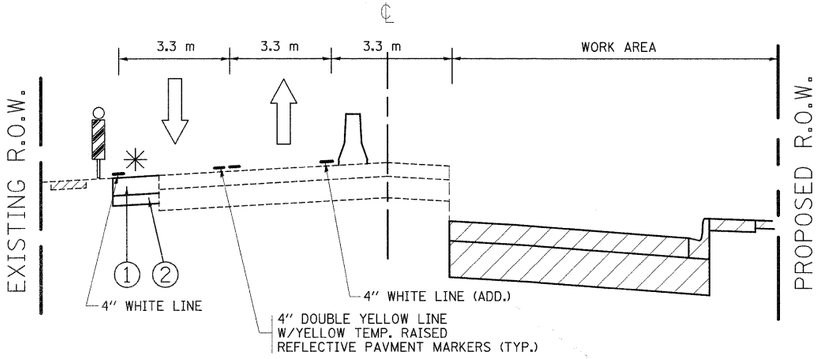

STA. 1+260 TO STA. 1+375

STAGE I

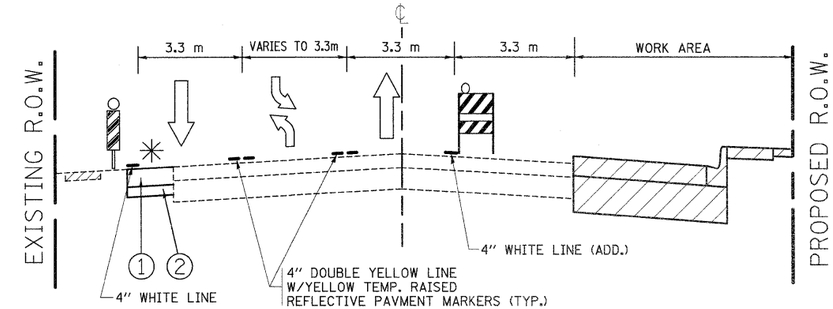

STA. 1+396.2 TO STA. 1+534

STAGE I

HOT - MIX ASPHALT MIXTURE REQUIERMENT FOR TEMPORARY PAVEMENT	
MIXTURE USES	DESIGN AIR VOIDS
HMA SURFACE COURSE MIX 'D', N50, (IL-9.5 mm), 38 mm (1½")	4% @ 50 GYR
HMA BINDER, IL-19, N50, 120 mm (4¾")	4% @ 50 GYR

✳ TEMPORARY WIDENING

(1) TEMPORARY PAVEMENT
(SEE MIXTURE TABLE FOR MIX REQUIREMENT)

(2) SUB-BASE GRANULAR MATERIAL, TYPE B, 100 mm (4")

NOTE: WIDTH VARIES (1M TO 1.75M)

REVISIONS	
NAME	DATE

ILLINOIS DEPARTMENT OF TRANSPORTATION

IL-50

TYPICAL CROSS SECTIONS FOR SUGGESTED CONSTRUCTION STAGING

STAGE I

SCALE: DRAWN BY

DATE: 10/14/2011 CHECKED BY

10/14/2011
c:\pw_work\pwidot\bauerd1\d0240503\P102397-stage1.dgn
bauerd1